STATE OF ILLINOIS
DEPARTMENT OF TRANSPORTATION

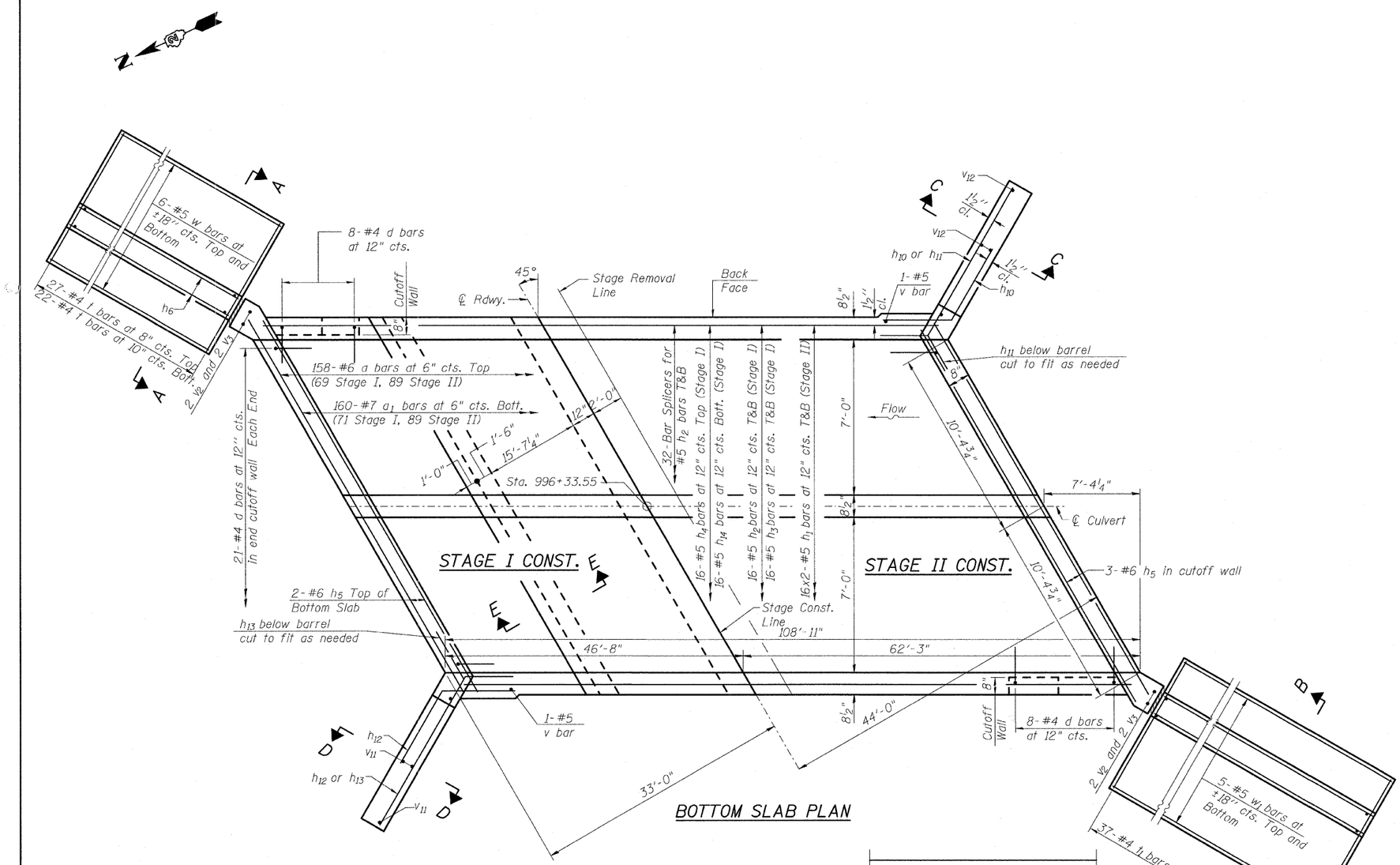

BOTTOM SLAB PLAN

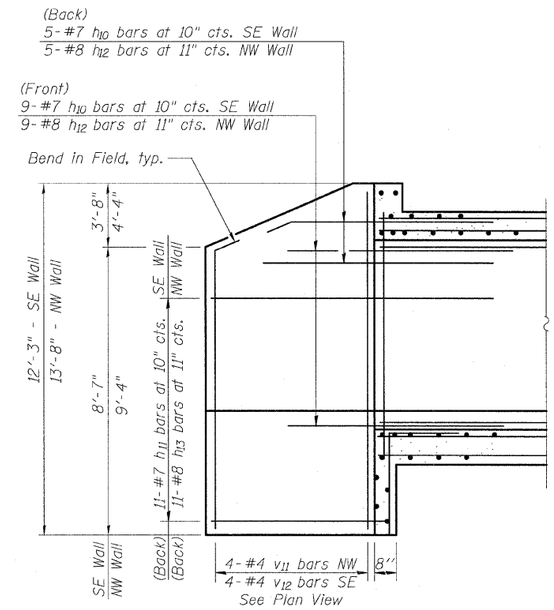

HORIZONTAL CANTILEVER WALL DETAILS

MIN. BAR LAP

#5 bar = 2'-2"

Notes:

A distance of half the length of the horizontal cantilevered wingwall but not less than six feet of the barrel shall be poured monolithically with the wingwalls.

Bars indicated thus 12x4-#5 etc. indicates 12 lines of bars with 4 lengths per line.

For Sections A-A, B-B, C-C & D-D see Sheet 7.

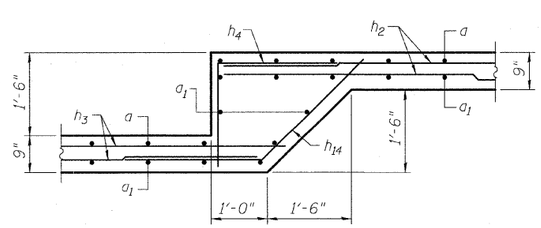

SECTION E-E

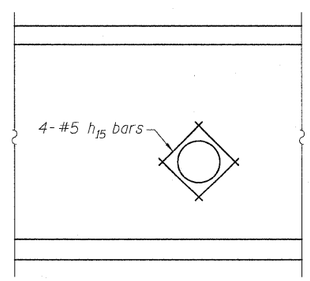

WALL OPENING DETAIL

Typical 3 locations

BOTTOM SLAB PLAN
STRUCTURE NO. 081-1116

DESIGNED	AEU
CHECKED	DS
DRAWN	AEU/AH
CHECKED	DS

RHAA
Robert H. Anderson & Associates, Inc.
Consulting Engineers
License No. 184-005281

SHEET NO. 6
9 SHEETS

F.A.P. RTE.	SECTION	COUNTY	TOTAL SHEETS	SHEET NO.
599	103MFT-T	ROCK ISLAND	55	30
		CONTRACT NO. 64737		
FED. ROAD DIST. NO.	ILLINOIS	FED. AID PROJECT		