F.A.I. RTE.	SECTION	COUNTY	TOTAL SHEETS	SHEET NO.
94	1717 I-7	COOK	47	28
STA. 1259+91.12		TO STA. 1270+24.39		
FED. ROAD DIST. NO.	ILLINOIS	FED. AID PROJECT		

62979

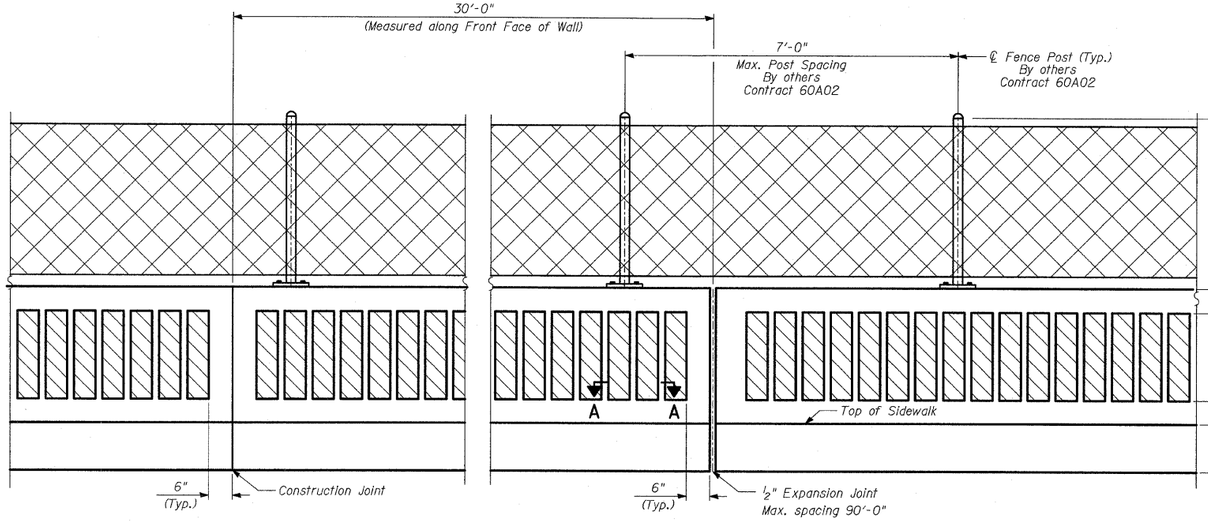

BACK FACE ELEVATION - FLUTED KNEE WALL AND CHAIN LINK FENCE

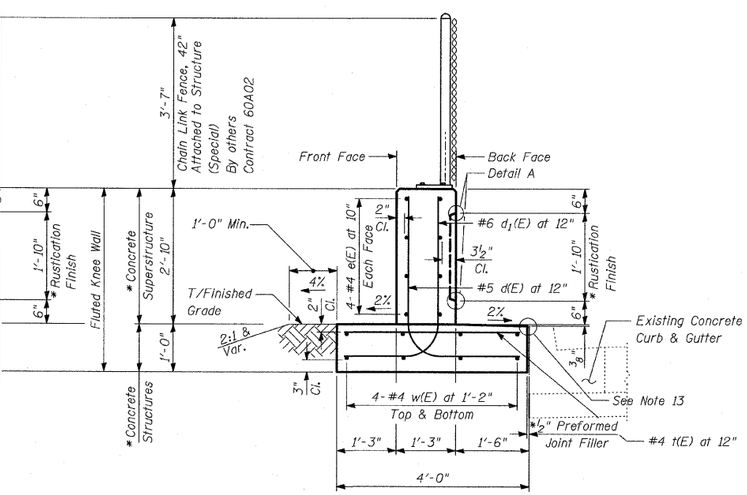

TYPICAL SECTION FLUTED KNEE WALL

Sta. 1259+91.1 to Sta. 1265+84.7
Sta. 1265+99.4 to Sta. 1267+41.6

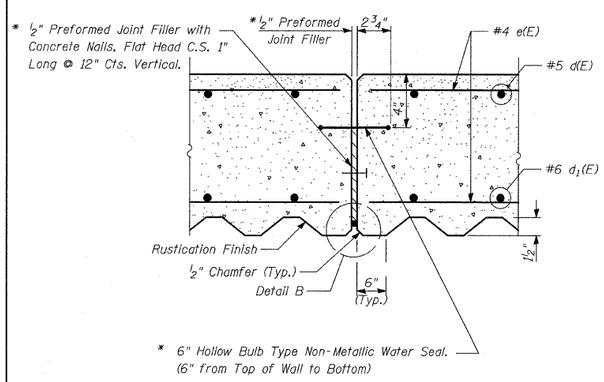

EXPANSION JOINT DETAILS

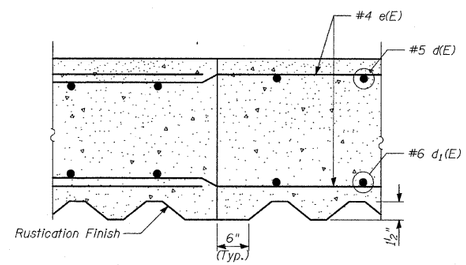

CONSTRUCTION JOINT DETAILS

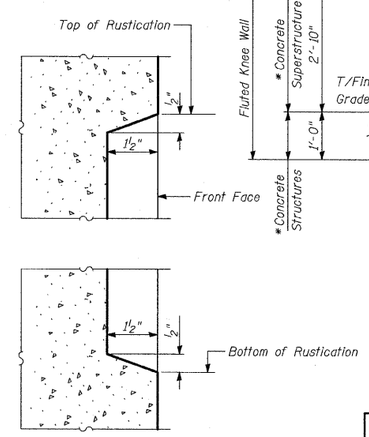

DETAIL A

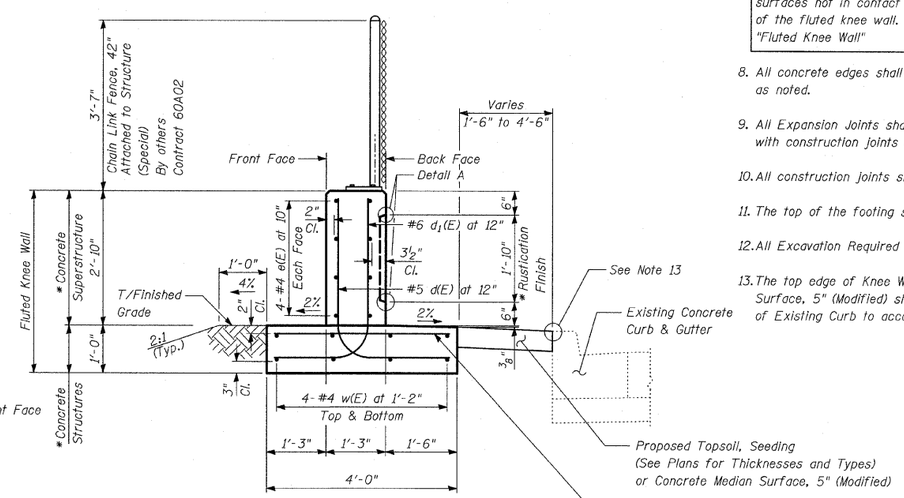

TYPICAL SECTION FLUTED KNEE WALL

Sta. 1265.84.7 to Sta. 1265+99.4

NOTES:

1. Reinforcement Bar Shall Conform to the Requirements of AASHTO M-31 or M-322 Grade 60
2. Concrete: f'c = 3500 psi
3. Fluted Knee Wall shall be paid for per foot as "Fluted Knee Wall." Included in the cost of "Fluted Knee Wall" shall be "Concrete Superstructures" stem, "Concrete Structures" foundation, reinforcement bars (epoxy coated), rustication finish, protective coat, expansion joint filler and sealing compound.
4. At Locations Where Fluted Knee Wall Abuts a Rigid Structure, a 1/2" Thick Preformed Expansion Joint Filller Conforming to the Shape of the Structure Shall be Installed Between the Wall and the Structure. A 1/2" PJF Shall be Installed where Fluted Knee Wall footing abuts curb and gutter. The cost shall be included in "Fluted Knee Wall".
5. Quantities shown in "BILL OF MATERIAL" are for one (1) foot of "Fluted Knee Wall".
6. Chain Link Fence, 42" Attached to Structure will not be paid for in this contract, but shall be furnished and installed by others in Contract 60A02.
7. Protective Coat shall be applied according to Section 503.19 of the Standard Specifications to all concrete surfaces not in contact with soil for the typical section of the fluted knee wall. The cost shall be included in "Fluted Knee Wall"
8. All concrete edges shall be chamfered 3/4" except as noted.
9. All Expansion Joints shall be at Maximum spacing of 90' with construction joints at 30'.
10. All construction joints shall be bonded.
11. The top of the footing shall be broom finished.
12. All Excavation Required shall be Earth Excavation.
13. The top edge of Knee Wall Footing or Concrete Median Surface, 5" (Modified) shall be 3/8" higher than the top of Existing Curb to account for future settlement.

* Cost included with "Fluted Knee Wall."

LAP SPLICES

Bar	Lap
#4	1'-8"
#5	2'-2"
#6	2'-7"

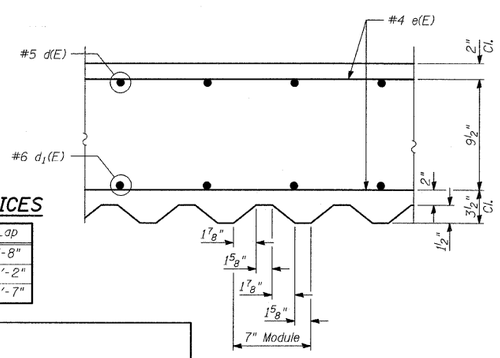

SECTION A-A

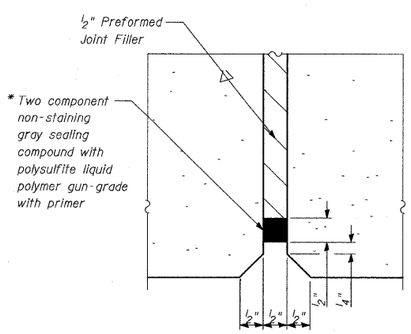

DETAIL B

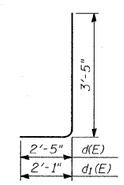

BARS d(E) & d1(E)

BILL OF MATERIAL

QUANTITIES PER FOOT OF FLUTED KNEE WALL		
ITEM	UNIT	TOTAL
Concrete Structures	CU YD	0.15
Concrete Superstructure	CU YD	0.14
Protective Coat	SQ YD	1.08
Rustication Finish	SQ FT	1.84
Reinforcement Bars, Epoxy Coated	POUND	27.9

REVISIONS	
NAME	DATE

TYLIN INTERNATIONAL

ILLINOIS DEPARTMENT OF TRANSPORTATION

F.A.I. 94 (DAN RYAN EXPRESSWAY)
FLUTED KNEE WALL ALONG LAFAYETTE AVE.
S. 87TH ST. TO S. OF 85TH ST.
FLUTED KNEE WALL STANDARD DETAILS

S.N.
SCALE: N.T.S.
DATE: OCTOBER 17, 2008
DESIGNED BY: MAF
DRAWN BY: MAF, TB
CHECKED BY: PF

R:\0237.3\structur\c28cr\w28cdr sh013.dgn 10/16/2008 4:06:57 PM