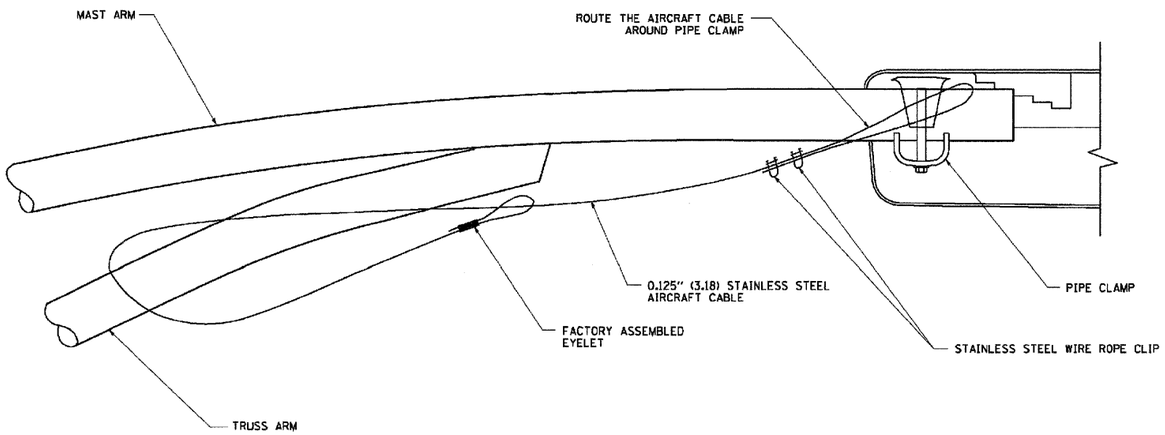

SIDE VIEW (TRUSS ARM)

N.T.S.

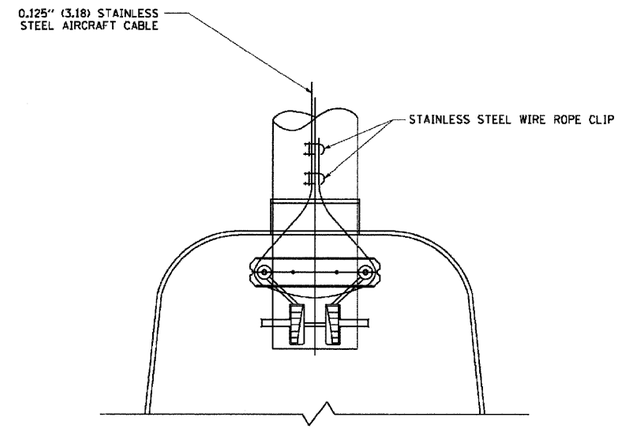

BOTTOM VIEW

N.T.S.

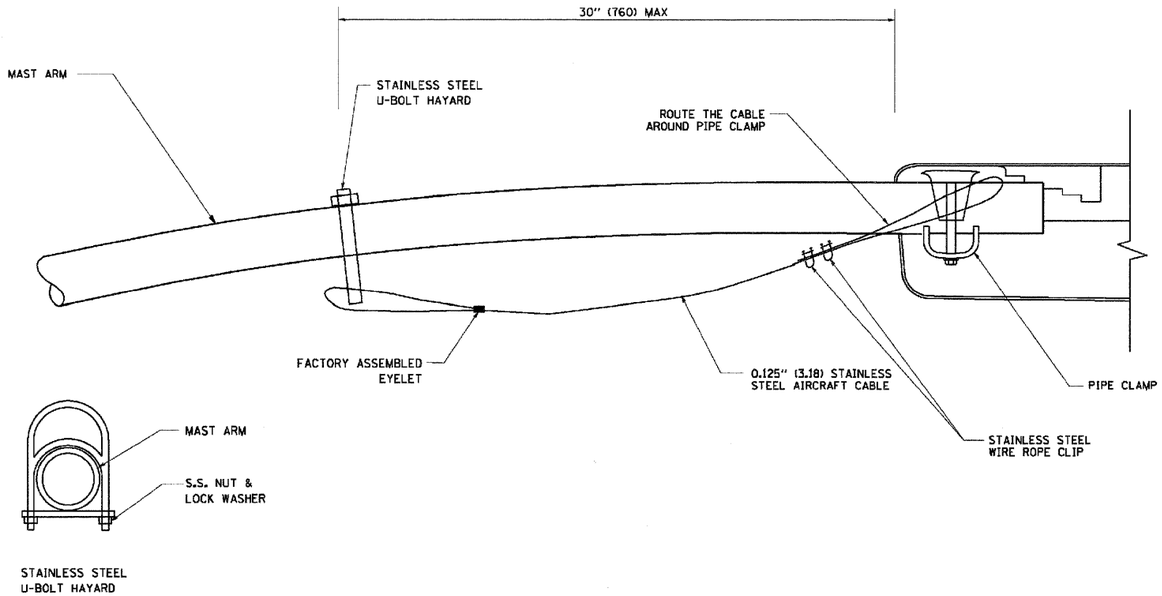

SIDE VIEW (SINGLE MEMBER OR DAVIT ARM)

N.T.S.

NOTES:

1. ALL DIMENSIONS ARE IN MILLIMETERS (INCHES) UNLESS OTHERWISE SHOWN.
2. CONTRACTOR SHALL ADJUST THE WIRE CLIP TO ELIMINATE ANY SLACK FROM THE WIRE ROPE.
3. THE 0.125" (3.18) STAINLESS STEEL AIRCRAFT CABLE SHALL REMAIN VISIBLE FROM THE GROUND LEVEL.
4. THE BREAKING STRENGTH OF THE CABLE SHALL BE 1700 LBS. MIN.

CHRISTOPHER B. BURKE ENGINEERING LTD.
9575 West Higgins Road, Suite 600
Rosemont, Illinois 60018
(847) 823-0500

PLAN / PROFILE — NOTE BOOK NO. — SURVEYED — PLOTTED — ALIGNMENT CHECKED — GRADES CHECKED — PLANS PREPARED — CADD FILE NAME — STRUCTURE NOTATIONS CHKD — BY — DATE

N:\Jobs\090040\Task FF-HH IL 19 Safety\Traffic\LIT_det09-ba701.dgn

FILE NAME = ...\Traffic\LIT_det09-be701.dgn	USER NAME = FPACIONE	DESIGNED - ABR	REVISED -	STATE OF ILLINOIS DEPARTMENT OF TRANSPORTATION	LUMINAIRE SAFETY CABLE ASSEMBLY	F.A.U. RTE.	SECTION	COUNTY	TOTAL SHEETS	SHEET NO.
		DRAWN - FPB / FCP	REVISED -			1321	2009-034 TS	COOK	45	44
	PLOT SCALE = 20'	CHECKED - MJT	REVISED -					CONTRACT NO. 60G39		
	PLOT DATE = 3/18/2009	DATE -	REVISED -		SCALE: N.T.S. SHEET NO. OF SHEETS STA. TO STA.	FED. ROAD DIST. NO.	ILLINOIS	FED. AID PROJECT		