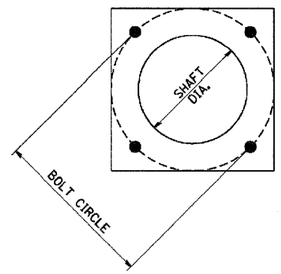

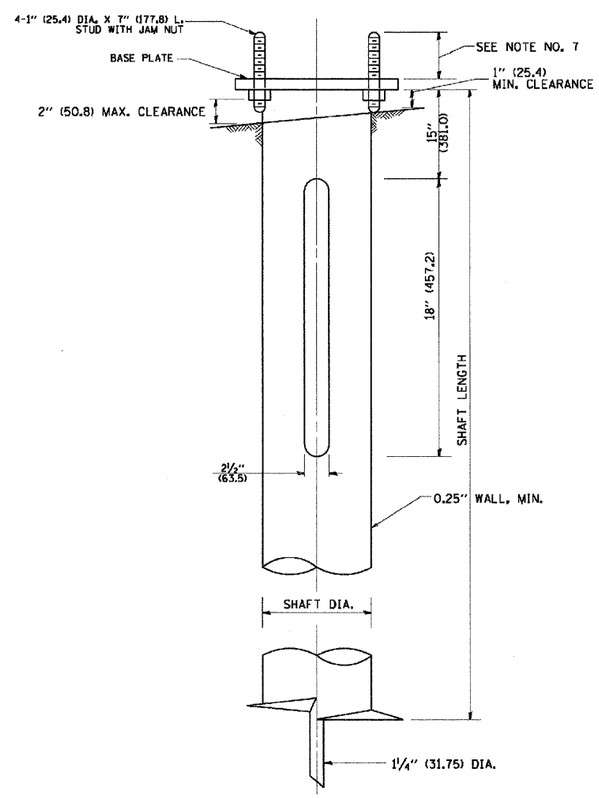

HELIX FOUNDATION SIZE

POLE MOUNTING HEIGHT	BOLT CIRCLE	SHAFT DIAMETER	SHAFT LENGTH	BASEPLATE
30 FT.	11½"	8⅝"	6 FT.	12"x12"x1"
31 FT.-35 FT.	11½"	8⅝"	6 FT.	12"x12"x1"
36 FT.-40FT.	15"	8⅝"	6 FT.	15"x15"x1¼"
41 FT.-45 FT.	15"	8⅝"	6 FT.	15"x15"x1¼"
46 FT.-50 FT.	15"	10"	8 FT.	15"x15"x1¼"

METAL HELIX FOUNDATION MATERIALS

ITEM	MATERIAL REQUIREMENT
BASEPLATE	AASHTO M 270M, GRADE 36 (M270M, GRADE 250)
SHAFT	ASTM A 252, GRADE 2 (PHOSPHOROUS 0.04% MAXIMUM, SULFUR 0.05% MAXIMUM)
HELIX SCREW	AASHTO M 183 (ASTM A 635)
PILOT POINT	AASHTO M 270 (ASTM A 575)
ANCHOR RODS/STUDS	AASHTO M 314 (ASTM F 1554)
HEXAGON NUTS	AASHTO M 291M (ASTM A 563) GRADE DH, OR AASHTO M 292 (ASTM A 194) GRADE 2H
WASHERS	AASHTO M 293 (ASTM F 436)

NOTES:

1. ALL DIMENSION IN INCHES (MILLIMETERS) UNLESS OTHERWISE SHOWN.
2. ALL MATERIAL SHALL BE GALVINIZED ACCORDING TO AASHTO M111, UNLESS OTHERWISE SPECIFIED.
3. ALL WELDS SHALL BE CONTINUOUS AND NOT LESS THAN ¼" (6.35 mm) FILLET WELDS. THE WELDED FOUNDATION SHALL BE CAPABLE OF WITHSTANDING 10,000 FT/LBS (13558.18 n.m) OF INSTALLATION TORQUE APPLIED ABOUT THE AXIS OF THE FOUNDATION.
4. THE HELIX FOUNDATION SHAFT SHALL BE INSTALLED VERTICAL AND THE BASE PLATE SHALL BE IN LEVEL. THE BREAKAWAY COUPLINGS AND HARDWARE SHALL NOT BE USED TO ALIGN THE POLE INSTALLATION.
5. THE CABLE TRENCH SHALL BE BACKFILLED AND FIRMLY COMPACTED BEFORE THE INSTALLATION OF THE LIGHT POLE.
6. THE CONTRACTOR SHALL COORDINATE EXTENSION OF ANCHOR BOLTS ABOVE TOP OF THE BASE PLATE WITH THE BREAKAWAY DEVICE MANUFACTURER'S REQUIREMENTS.
7. ANY VOIDS WITHIN THE METAL FOUNDATION SHALL BE FILLED WITH FINE AGGREGATE.
8. METAL FOUNDATIONS SHALL BE INSTALLED IN UNDISTURBED SOIL. PREDRILLING A PILOT HOLE AND/OR BACKFILLING AROUND THE FOUNDTION IS NOT ALLOWED.
9. THE METAL FOUNDATION SHALL NOT BE INSTALLED TO A TORQUE WHICH EXCEEDS THE MANUFACTURER'S MAXIMUM TORQUE RATING NOR SHALL IT BE INSTALLED TO AN INSTALLATION TORQUE VALUE OF LESS THAN 3,500 FT LB (4,750 KNM). METAL FOUNDATIONS THAT ARE NOT INSTALLED TO FULL INSTALLATION DEPTH OR DO NOT ACHIEVE THE MINIMUM INSTALLATION TORQUE SHALL BE REMOVED AND REPLACED WITH A CONCRETE FOUNDATION AT NO ADDITIONAL COST.
10. THE BASEPLATE SHALL BE PERPENDICULAR TO THE SHAFT AXIS (± 1°) AND THE HOLE CENTERLINE SHALL BE CONCENTRIC (± 0.188) TO THE SHAFT AXIS.
11. THE PILOT POINT AND SHAFT AXIS SHALL BE CONCENTRIC (± 0.125) AND IN LINE (± 2°).
12. THE BASEPLATE SHALL BE STAMPED WITH THE MANUFACTURERS NAME AND DATE OF MANUFACTURE.

CHRISTOPHER B. BURKE ENGINEERING LTD.
9575 West Higgins Road, Suite 600
Rosemont, Illinois 60018
(847) 823-0500

PLAN — NOTE BOOK NO. ____ — SURVEYED / PLOTTED / ALIGNMENT CHECKED / RT. OF WAY CHECKED / RADD FILE NAME — BY — DATE

PROFILE — NOTE BOOK NO. ____ — SURVEYED / PLOTTED / GRADE CHECKED / GRADE PLOTTED / STRUCTURE NOTATIONS CHKD — BY — DATE

N:\Jobs\0808240\Tank FF-4# IL 19 Safety\Traffic\LIT_det06-be385.dgn

FILE NAME = ...\Traffic\LIT_det06-be385.dgn	USER NAME = FPACIONE	DESIGNED - ABR	REVISED -	STATE OF ILLINOIS DEPARTMENT OF TRANSPORTATION	LIGHT POLE FOUNDATION METAL	F.A.U. RTE.	SECTION	COUNTY	TOTAL SHEETS	SHEET NO.
		DRAWN - FPB / FCP	REVISED -			1321	2009-034 TS	COOK	45	41
	PLOT SCALE = 20'	CHECKED - MJT	REVISED -					CONTRACT NO. 60G39		
	PLOT DATE = 3/18/2009	DATE -	REVISED -		SCALE: N.T.S. SHEET NO. OF SHEETS STA. TO STA.	FED. ROAD DIST. NO.	ILLINOIS	FED. AID PROJECT		