DROP BOX VARIABLES

STATION	OFFSET	OUTLET SIZE	SKEW	α	β	INV ELEV	DITCH ℄	DIMENSIONS FOR CONCRETE A	B	C	Concrete 1 Drop Str Cu Yd	Reinf Bars - 1 Drop Str h - bars X	Lgth	No	v - bars Lgth	No	v1 - bars Lgth	No	t - bars Lgth	No	w - bars Lgth	No	Pipe Handrail Foot	Bars 1 Drop Str Pound
254+50	LT	36" RCCP	0°	90°	90°	495.91	501.75	4'-8"	6'-0"	6'-2"	3.4	3'-6"	6'-0"	28	5'-6"	14	5'-2"	4	6'-0"	5	4'-0"	7	17'-4"	216

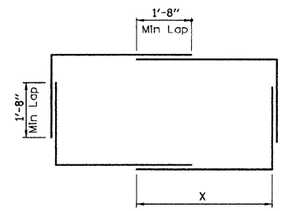

h BAR PLAN LAYOUT

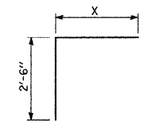

BAR h

PIPE CULVERT OUTFALL DETAIL

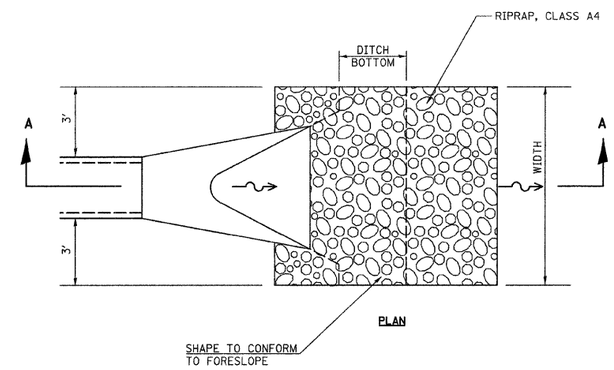

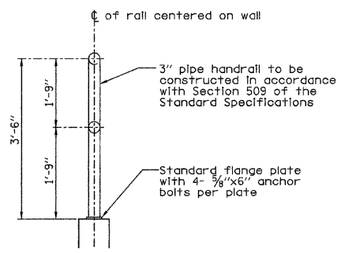

3" PIPE HANDRAIL SECTION

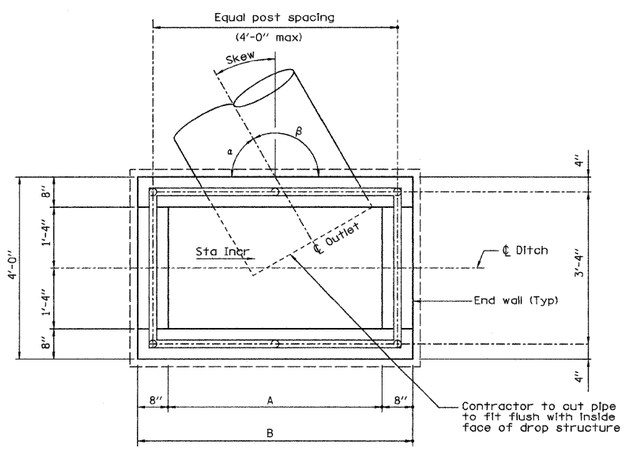

PLAN

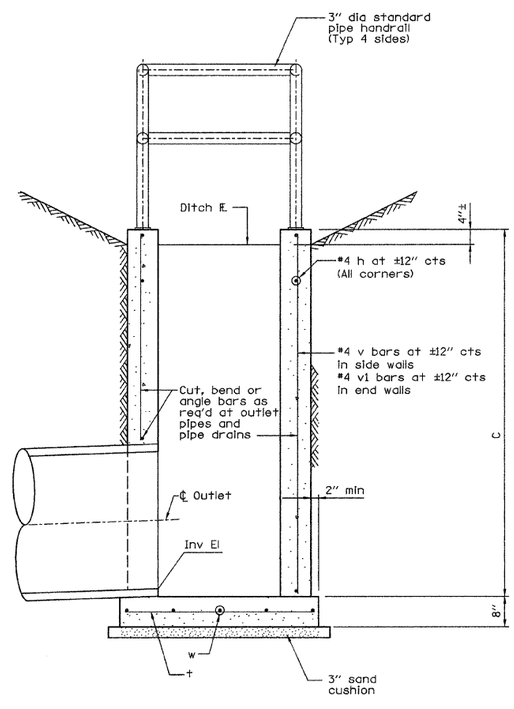

SECTION THRU DROP BOX

RIPRAP LOCATIONS

248+00.00 RT
254+50.00 RT
260+15.00 RT
268+30.00 RT
272+30.00 RT

DESIGN STRESSES

f'c = 3,500 psi
fy = 60,000 psi

GENERAL NOTES

Precast units may be used in lieu of cast in place if approved by the Engineer.

Place all reinforcement in middle of slab or wall.

Drop structures shall be paid for at the contract unit price, Cu Yd, for Concrete Structure. Price shall include the cost of concrete bottom slab and concrete walls. Handrailing and reinforcement shall be paid for at the contract unit price for Pipe Handrail (Foot) and Reinforcement Bars (Pound) and shall be furnished and installed in accordance with the plans and Special Provisions.

Class SI concrete shall be used throughout.

FILE NAME = vi\transportation\2839\2839D001.dgn	USER NAME = jolson	DESIGNED - JRB	REVISED -
		DRAWN - JMO	REVISED -
	PLOT SCALE = 1.5625 ' / IN.	CHECKED - JRB	REVISED -
	PLOT DATE = 2/26/2010	DATE - 1-21-10	REVISED -

STATE OF ILLINOIS
DEPARTMENT OF TRANSPORTATION

LITERBERRY-PRENTICE ROAD (CH 19)
SPECIAL DETAILS

SCALE: NONE | SHEET NO. 1 OF 2 SHEETS | STA. | TO STA.

F.A.S. RTE.	SECTION	COUNTY	TOTAL SHEETS	SHEET NO.
611	05-00093-03-FP	MORGAN	31	14

CONTRACT NO. 93535

ILLINOIS FED. AID PROJECT