CONTRACT NO. 78060

F.A.P. RTE.	SECTION	COUNTY	TOTAL SHEETS	SHEET NO.
312	101-2(RS-1,N-1)	ALEXANDER	189	163
STA. 41+910.00		TO STA. 41+930.00		
FED. ROAD DIST. NO.		ILLINOIS	FED. AID PROJECT	

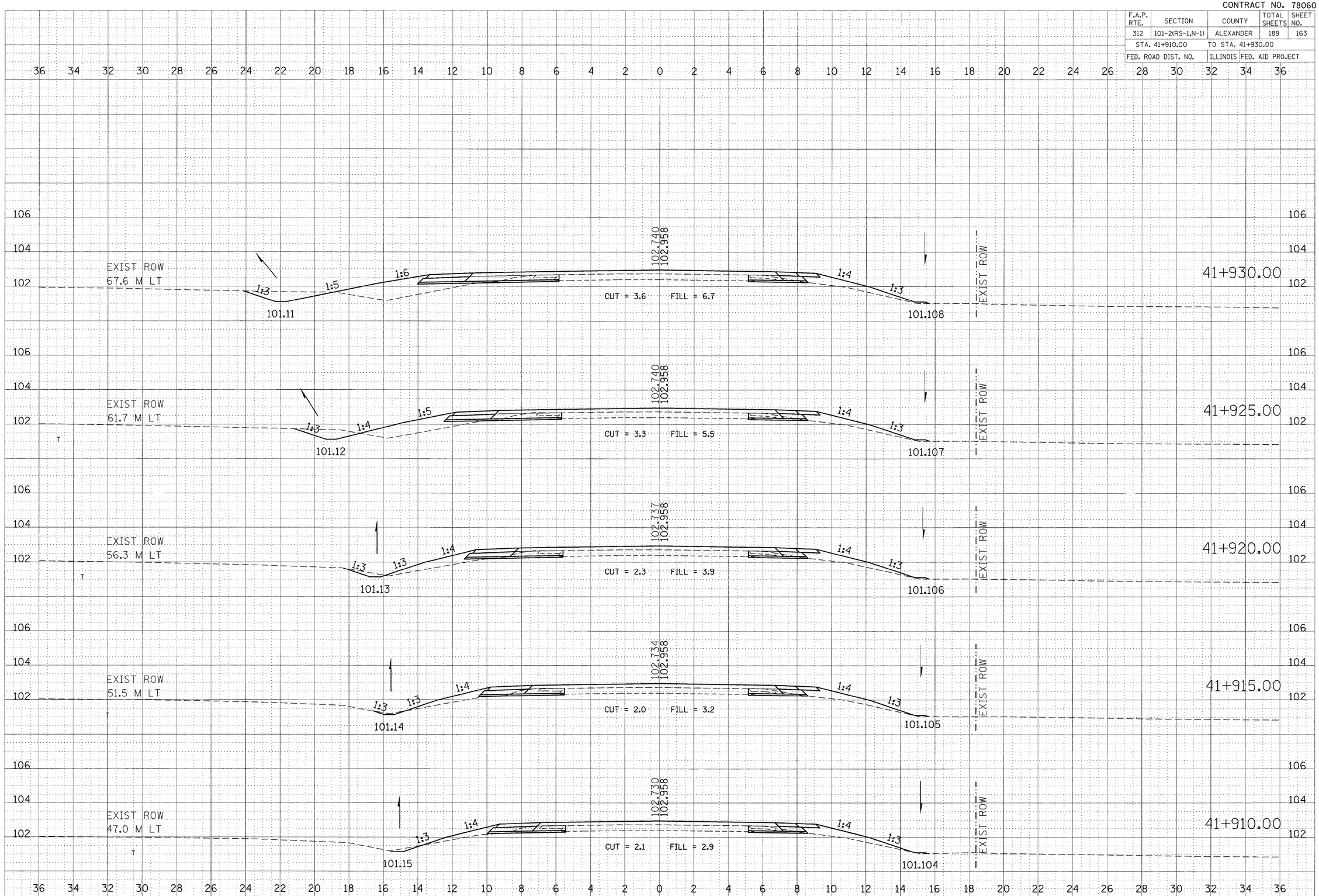

IL 3: STA 41+910.00 TO STA 41+930.00

FINAL SURVEY | NOTE BOOK | NO. | SURVEYED | PLOTTED | TEMPLATE | AREAS | AREAS CHECKED | BY | DATE

ORIGINAL SURVEY | NOTE BOOK | NO. | SURVEYED | PLOTTED | TEMPLATE | AREAS | AREAS CHECKED | BY | DATE

PLOT DATE = 9/17/2009
FILE NAME = c:\pw_work\PWIDOT\LEFTWICHDL\dms43640\m02599xs-Rte3shrs-C2.m32
PLOT SCALE = 100.0000 m / M.
USER NAME = leftwichdl