CONTRACT NO. 78060

F.A.P. RTE.	SECTION	COUNTY	TOTAL SHEETS	SHEET NO.
312	101-2(RS-1,N-1)	ALEXANDER	189	15
STA.		TO STA.		
FED. ROAD DIST. NO.	ILLINOIS	FED. AID PROJECT		

TYPICALS

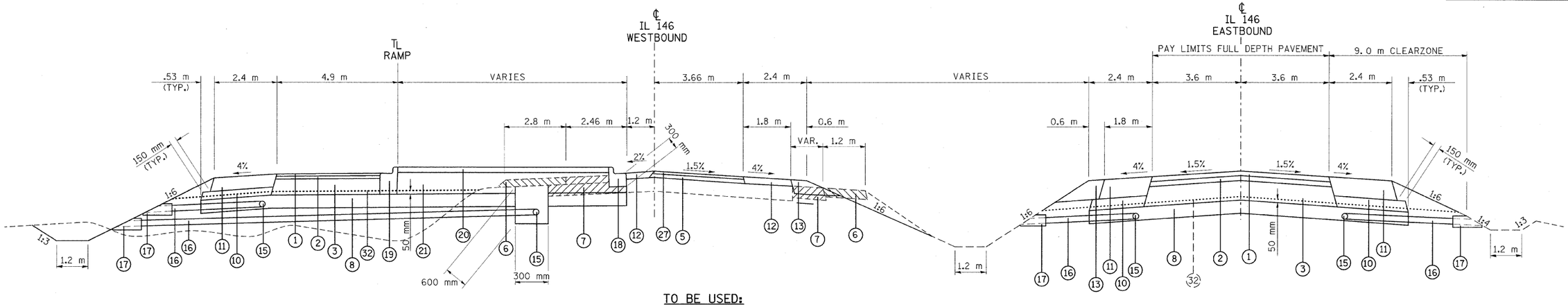

TO BE USED:

EB STA. 16+006.335 TO STA. 16+050 (GRADE LINE STOPS AT EB STA 16+050)
WB STA. 6+006.335 TO STA. 6+050

1. POLYMERIZED HOT-MIX ASPHALT SURFACE COURSE, MIX. D, N90 50MM
2. POLYMERIZED HOT-MIX ASPHALT BINDER COURSE, IL-19.0, N90 38MM AND VARIABLE
3. HOT-MIX ASPHALT BINDER COURSE, IL-19.0, N90 292MM
4. ROCKFILL (CONSTRUCTED DURING PREVIOUS CONTRACT)
5. POLYMERIZED HOT-MIX ASPHALT BINDER COURSE, IL-19.0, N90 57MM AND VARIABLE
6. PAVED SHOULDER REMOVAL
7. PAVEMENT REMOVAL
8. PROCESSING MODIFIED SOILS 300MM
9. SUB-BASE GRANULAR MATERIAL, TYPE A 100MM (CONSTRUCTED DURING PREVIOUS CONTRACT)
10. SUB-BASE GRANULAR MATERIAL, TYPE C
11. HOT-MIX ASPHALT SHOULDERS, 200MM
12. HOT-MIX ASPHALT SHOULDERS, M. TON 95MM AND VARIABLE
13. AGGREGATE SHOULDERS, TYPE A 200MM
14. AGGREGATE WEDGE SHOULDER, TYPE B
15. PIPE UNDERDRAIN 100MM
16. PIPE UNDERDRAIN 100MM (SPECIAL)
17. CONCRETE HEADWALL FOR PIPE DRAINS
18. COMBINATION CONCRETE CURB AND GUTTER TYPE M-15.60
19. COMBINATION CONCRETE CURB AND GUTTER TYPE M-15.15
20. CONCRETE MEDIAN SURFACE, 100MM
21. COURSE AGGREGATE, CA7 OR CA11
22. HOT-MIX ASPHALT BASE COURSE, 285MM
23. SUB-BASE GRANULAR MATERIAL, TYPE A 100MM
24. PORTLAND CEMENT CONCRETE PAVEMENT 250MM (JOINTED)
25. HOT-MIX ASPHALT SURFACE REMOVAL 15MM AND VARIABLE
26. POLYMERIZED LEVELING BINDER (MACHINE METHOD), N90 VARIABLE
27. POLYMERIZED HOT-MIX ASPHALT SURFACE COURSE, MIX D, N90 38MM
28. HOT-MIX ASPHALT BINDER COURSE, IL-19.0, N90 285MM
29. HOT-MIX ASPHALT SHOULDERS, 250MM
30. AGGREGATE SHOULDERS, TYPE A 250MM
31. STRIP REFLECTIVE CRACK CONTROL TREATMENT
32. GRADE LINE (CONSTRUCTED DURING PREVIOUS CONTRACT)
33. STABILIZED SUB-BASE-HOT-MIX ASPHALT, 100MM

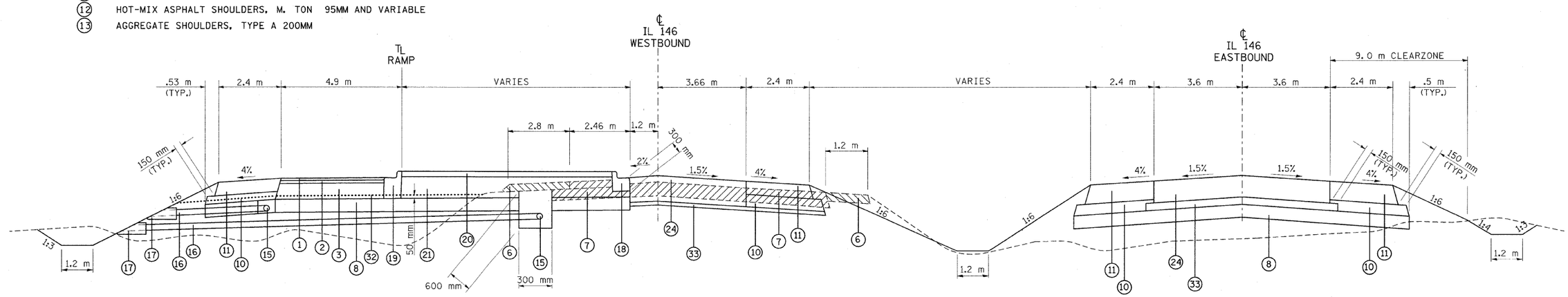

TO BE USED:

EB STA. 16+050 TO STA. 16+100 (GRADE LINE STOPS AT EB STA 16+050)
WB STA. 6+050 TO STA. 6+100

REVISIONS	
NAME	DATE

ILLINOIS DEPARTMENT OF TRANSPORTATION

TYPICALS

SCALE: VERT. HORIZ. NONE
DATE
DRAWN BY CNH
CHECKED BY

PLOT DATE = 3/3/2010
FILE NAME = c:\pw_work\PWIDOT\KRANZJC\dms43640\md02599c2typ.dgn
PLOT SCALE = 50.0000 ' / IN.
USER NAME = kranzjc