CONTRACT NO. 78060

F.A.P. RTE.	SECTION	COUNTY	TOTAL SHEETS	SHEET NO.
312	101-2(RS-1,N-1)	ALEXANDER	189	9
STA.		TO STA.		
FED. ROAD DIST. NO.	ILLINOIS	FED. AID PROJECT		

IL 146
STRUCTURAL DESIGN TRAFFIC: Year 2005
PV = 7450 SU = 600 MU = 650
ROAD/STREET CLASSIFICATION: Class I
PERCENT OF STRUCTURAL DESIGN TRAFFIC IN DESIGN LANE:
P = 32% S = 45% M = 45%
TRAFFIC FACTOR: Actual TF = 4.48 AC Type = 20
Minimum TF = 4.27
PG GRADE: SURFACE: SBS PG76-22
TOP LIFT BINDER: SBS PG76-22
LOWER LIFTS BINDER: PG64-22
SUB-GRADE SUPPORT RATING:
SSR = POOR (STA. 12+539.4 TO 16+100)

TYPICALS

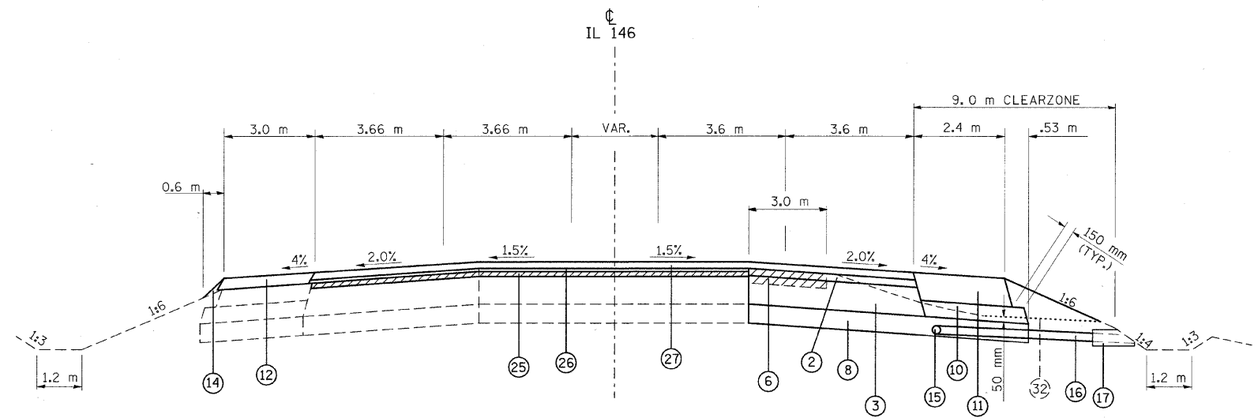

TO BE USED:
EB STA. 12+539.4 TO STA. 12+635.6
WB STA. 2+539.4 TO STA. 2+635.6

NOTE:
HOT-MIX ASPHALT SURFACE REMOVAL VARIABLE DEPTH AND POLYMERIZED LEVELING BINDER SHALL BE USED TO CORRECT THE PAVEMENT SLOPE.

1. POLYMERIZED HOT-MIX ASPHALT SURFACE COURSE, MIX. D, N90 50MM
2. POLYMERIZED HOT-MIX ASPHALT BINDER COURSE, IL-19.0, N90 38MM AND VARIABLE
3. HOT-MIX ASPHALT BINDER COURSE, IL-19.0, N90 292MM
4. ROCKFILL (CONSTRUCTED DURING PREVIOUS CONTRACT)
5. POLYMERIZED HOT-MIX ASPHALT BINDER COURSE, IL-19.0, N90 57MM AND VARIABLE
6. PAVED SHOULDER REMOVAL
7. PAVEMENT REMOVAL
8. PROCESSING MODIFIED SOILS 300MM
9. SUB-BASE GRANULAR MATERIAL, TYPE A 100MM (CONSTRUCTED DURING PREVIOUS CONTRACT)
10. SUB-BASE GRANULAR MATERIAL, TYPE C
11. HOT-MIX ASPHALT SHOULDERS, 200MM
12. HOT-MIX ASPHALT SHOULDERS, M. TON 95MM AND VARIABLE
13. AGGREGATE SHOULDERS, TYPE A 200MM
14. AGGREGATE WEDGE SHOULDER, TYPE B
15. PIPE UNDERDRAIN 100MM
16. PIPE UNDERDRAIN 100MM (SPECIAL)
17. CONCRETE HEADWALL FOR PIPE DRAINS
18. COMBINATION CONCRETE CURB AND GUTTER TYPE M-15.60
19. COMBINATION CONCRETE CURB AND GUTTER TYPE M-15.15
20. CONCRETE MEDIAN SURFACE, 100MM
21. COURSE AGGREGATE, CA7 OR CA11
22. HOT-MIX ASPHALT BASE COURSE, 285MM
23. SUB-BASE GRANULAR MATERIAL, TYPE A 100MM
24. PORTLAND CEMENT CONCRETE PAVEMENT 250MM (JOINTED)
25. HOT-MIX ASPHALT SURFACE REMOVAL 15MM AND VARIABLE
26. POLYMERIZED LEVELING BINDER (MACHINE METHOD), N90 VARIABLE
27. POLYMERIZED HOT-MIX ASPHALT SURFACE COURSE, MIX D, N90 38MM
28. HOT-MIX ASPHALT BINDER COURSE, IL-19.0, N90 285MM
29. HOT-MIX ASPHALT SHOULDERS, 250MM
30. AGGREGATE SHOULDERS, TYPE A 250MM
31. STRIP REFLECTIVE CRACK CONTROL TREATMENT
32. GRADE LINE (CONSTRUCTED DURING PREVIOUS CONTRACT)
33. STABILIZED SUB-BASE-HOT-MIX ASPHALT, 100MM

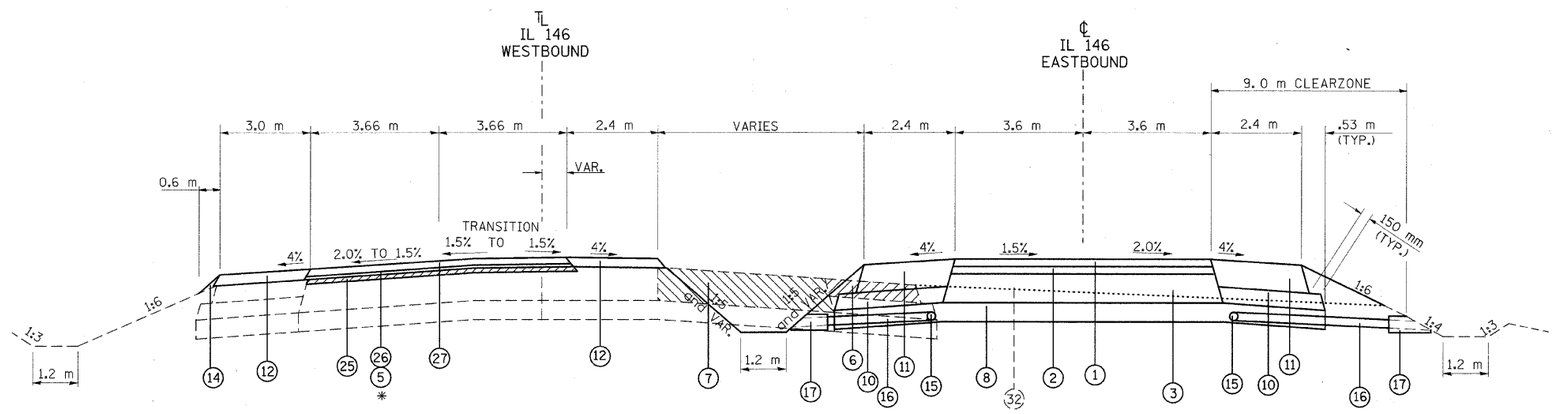

TO BE USED:
EB STA. 12+635.6 TO STA. 12+700
WB STA. 2+635.6 TO STA. 2+700

NOTE:
HOT-MIX ASPHALT SURFACE REMOVAL VARIABLE DEPTH, POLYMERIZED LEVELING BINDER AND POLYMERIZED HOT-MIX ASPHALT BINDER COURSE SHALL BE USED TO CORRECT THE PAVEMENT SLOPE.

*(26) ENDS AT STA. 2+650
(5) BEGINS AT STA. 2+650

REVISIONS	
NAME	DATE

ILLINOIS DEPARTMENT OF TRANSPORTATION

TYPICALS

SCALE: VERT. NONE HORIZ.
DATE
DRAWN BY CNH
CHECKED BY

PLOT DATE = 3/3/2010
FILE NAME = c:\pwworking\PWIDOT\KRANZJC\dms43640\hsd025990c2sgp.dgn
PLOT SCALE = 50.0000 ' / IN.
USER NAME = kranzjc