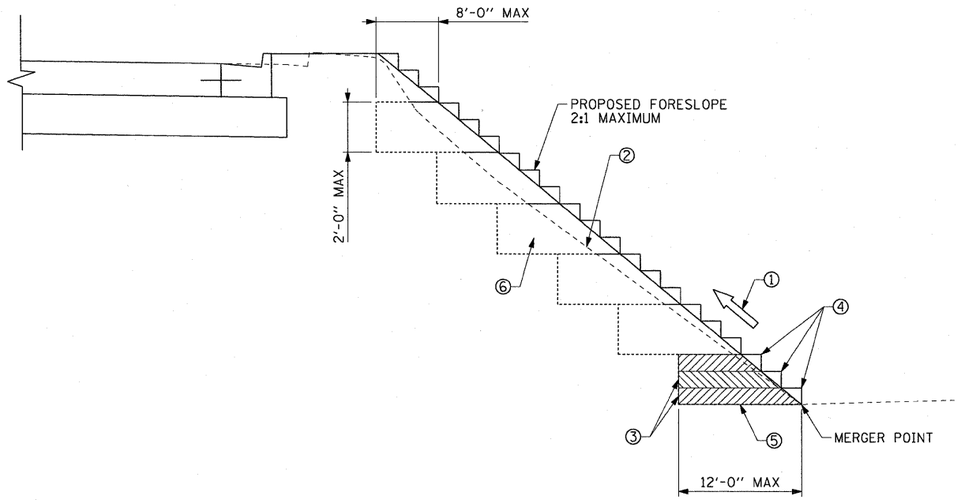

TYPICAL BENCHING DETAIL FOR EMBANKMENT

SCALE: NONE

NOTES:

① CONSTRUCT SUCCEEDING BENCH CUTS AND EMBANKMENT PLACEMENT AND COMPACTION FROM BOTTOM TO TOP IN STAIRSTEP FASHION.

② EXISTING FORESLOPE PREPARED IN ACCORDANCE WITH ARTICLE 205.03 OF THE STANDARD SPECIFICATIONS.

③ BENCH CUT EXISTING FINAL SLOPE TYPICAL FOR EACH STEP.

④ TRIM TO FINAL SLOPE.

⑤ EQUAL 8-INCH LIFTS OF EMBANKMENT COMPACTED IN ACCORDANCE WITH ARTICLE 205.05 OF THE STANDARD SPECIFICATIONS.

⑥ EXCAVATION OF BENCH CUTS WITHIN EXISTING EMBANKMENT WILL BE PAID FOR AT THE CONTRACT UNIT PRICE PER CUBIC YARD FOR "EARTH EXCAVATION". THIS PRICE WILL INCLUDE ALL LABOR AND MATERIAL. NO ADDITIONAL COMPENSATION WILL BE ALLOWED.

⑦ SLOPES SHALL BE BENCHED ACCORDING TO THIS DETAIL WHEN THE SLOPE IS STEEPER THAN 4:1 AND THE HEIGHT IS GREATER THAN 5'.

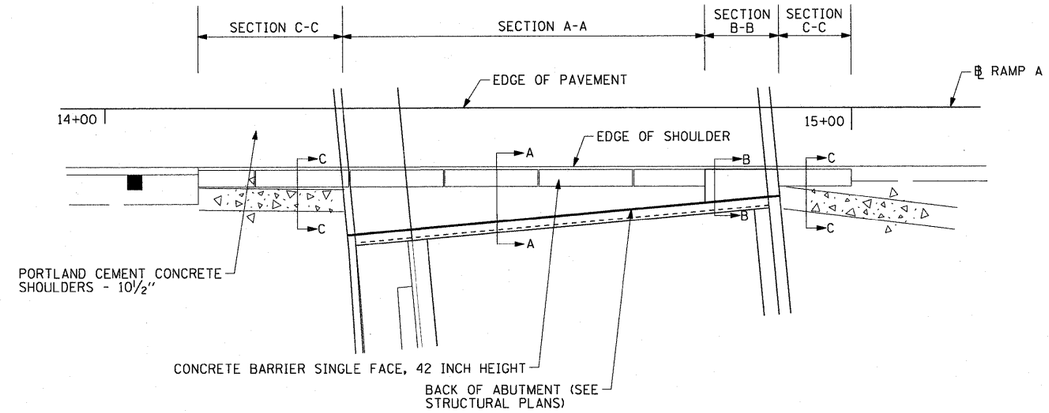

PLAN

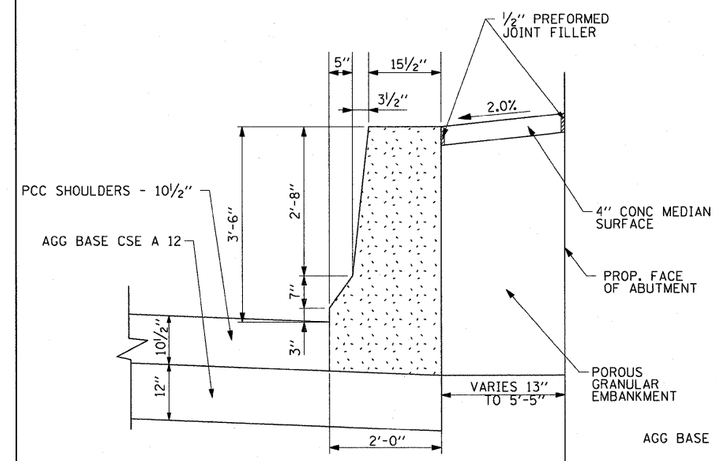

SECTION A-A

STA 14+32.15 TO 14+80.50 (RAMP A)

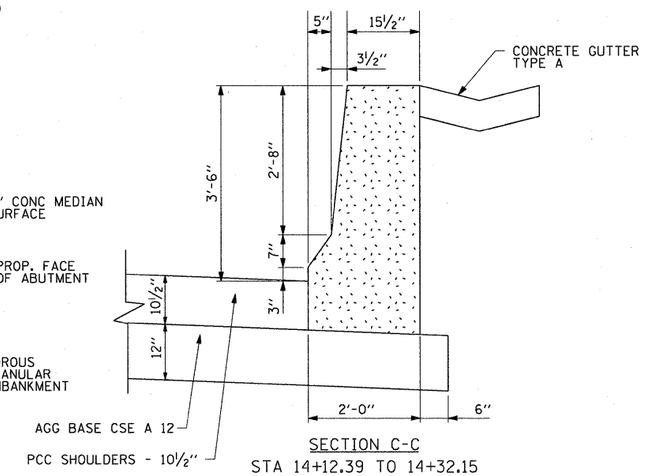

SECTION C-C

STA 14+12.39 TO 14+32.15

STA. 14+90.38 TO 15+00.00

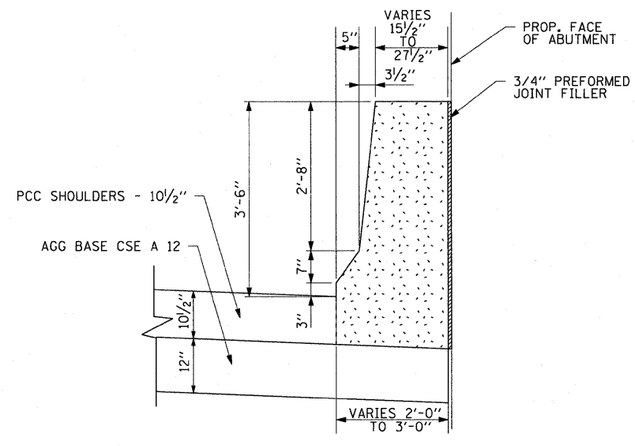

SECTION B-B

STA 14+80.50 TO 14+90.38

NOTES:

1. 1" DEEP CONTRACTION JOINTS SHALL BE CONSTRUCTED IN THE BARRIER WALL ONLY (NOT IN THE BARRIER BASE). THE LOCATION OF THE CONTRACTION JOINT SHALL MATCH CRACKS THAT HAVE ALREADY DEVELOPED IN THE BASE. CONTRACTIONS JOINTS SHALL ALSO BE CONSTRUCTED AT BOTH SIDES OF ALL DRAINAGE STRUCTURES. MAXIMUM JOINT SPACING SHALL BE 30 FEET.

2. THE FORMING OF CONTRACTIONS JOINTS SHALL BE DONE WITH AN APPROVED FINISHING TOOL AT THE DISCRETION OF THE ENGINEER SUBJECT TO THE SATISFACTORY CONTROL OF CRACKING. THE SAWING OF CONTRACTION JOINTS IN THE BARRIER WALL SHALL NOT BE PERMITTED.

3. THE CONCRETE BARRIER BASE SHALL BE POURED MONOLITHICALLY WITH THE BARRIER. THE COST OF CONCRETE BARRIER BASE SHALL BE INCLUDED IN THE COST OF CONCRETE BARRIER, SINGLE FACE, 42 INCH HEIGHT.

FILE NAME = $FILEA$	USER NAME = pmsorno	DESIGNED OP	REVISED - 4/15/2010	STATE OF ILLINOIS DEPARTMENT OF TRANSPORTATION
		DRAWN OP	REVISED -	
	PLOT SCALE = 10.000 ' / IN.	CHECKED DBM	REVISED -	
	PLOT DATE = 4/7/2010	DATE 03/19/10	REVISED -	

ROADWAY DETAILS – CONCRETE BARRIER, SINGLE FACE, 42 INCH HEIGHT AND TYPICAL BENCHING DETAIL FOR EMBANKMENT

SCALE: NONE | SHEET NO. 1 OF 1 SHEETS | STA. | TO STA.

F.A.I. RTE.	SECTION	COUNTY	TOTAL SHEETS	SHEET NO.
64	82-1-2HB	ST. CLAIR	345	275
		CONTRACT NO. 76C49		
FED. ROAD DIST. NO.	ILLINOIS	FED. AID PROJECT		