AS–BUILT PLANS
FOR INFORMATION ONLY

STATE OF ILLINOIS
DEPARTMENT OF PUBLIC WORKS & BUILDINGS
DIVISION OF HIGHWAYS

ROUTE NO.	SECTION	COUNTY	TOTAL SHEETS	SHEET NO.
F.A.I. 11	10-7HB	Champaign	37	10
FED. ROAD DIST. NO. 7	RAILROAD	FED. AID PROJECT-		

SHEET NO. 2
10 SHEETS

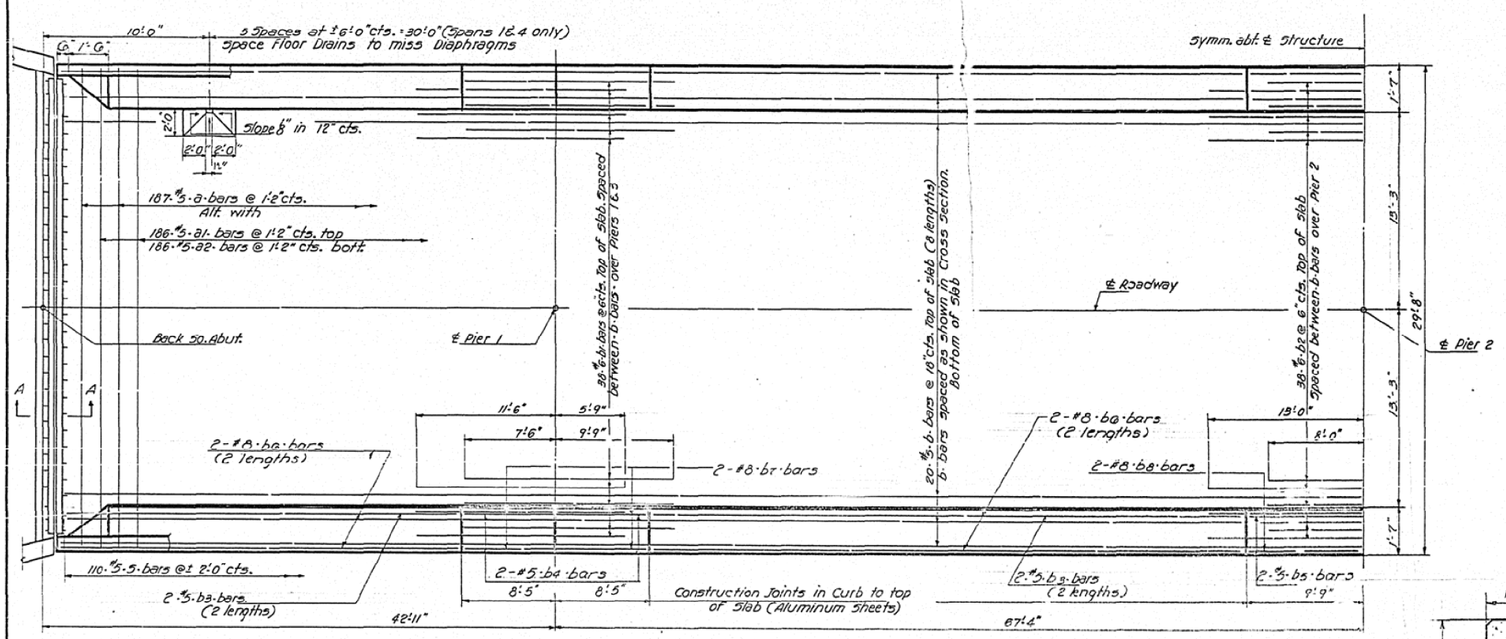

HALF PLAN

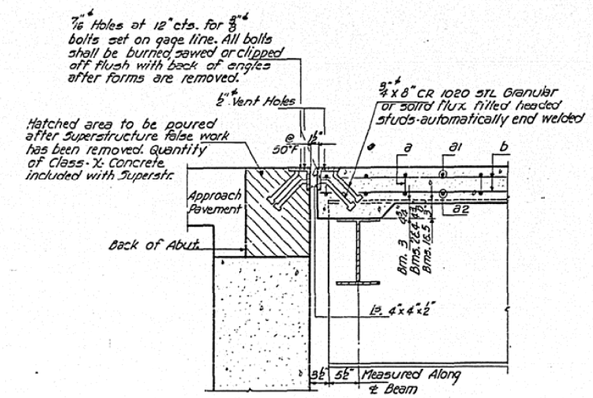

SECTION A-A

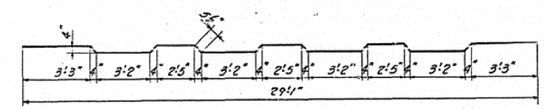

BAR a

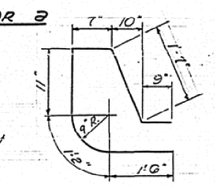

BAR s

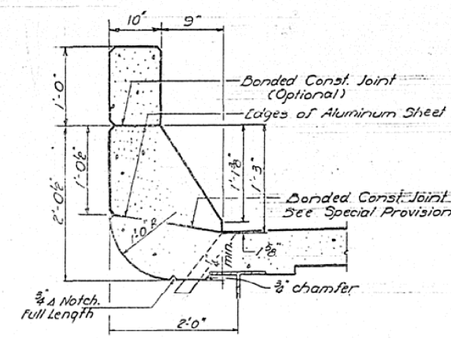

CURB DETAIL

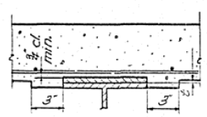

METHOD OF DETERMINING FILLET HEIGHT "t"

After all structural steel has been erected, elevations of the top flanges of the beams shall be taken at the stations shown on Sheet 10. These Elevations subracted from the "Theoretical Grade Elevations Adjusted for Dead Load Deflection" shown on Sheet 10 minus floor thickness equals the fillet heights above top of beams.

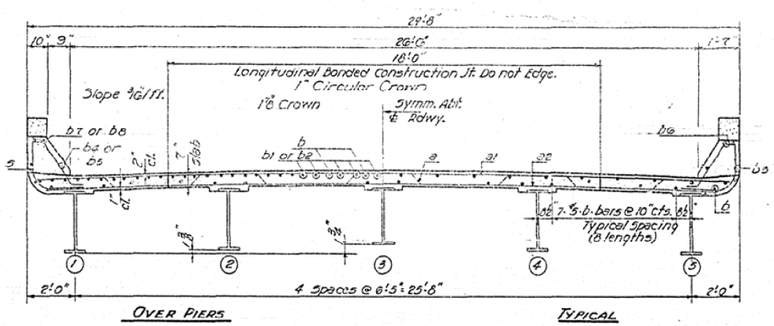

OVER PIERS — TYPICAL

CROSS SECTION

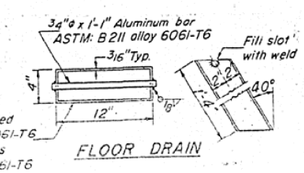

Aluminum Sheets Welded
ASTM: B209 alloy 6061-T6
or Aluminum Extrusions
ASTM: B221 alloy 6061-T6

FLOOR DRAIN

BILL OF MATERIAL

BAR	NO.	SIZE	LENGTH	SHAPE
a	187	#5	30'-1"	
a1	186	#5	29'-1"	
a2	186	#5	28'-4"	
b	400	#5	28'-3"	
b1	76	#6	17'-3"	
b2	38	#6	21'-0"	
b3	40	#5	17'-3"	
b4	16	#5	5'-9"	
b5	8	#5	9'-6"	
b6	40	#8	17'-9"	
b7	16	#8	8'-2"	
b8	8	#8	9'-6"	
s	220	#5	6'-6"	D
* Class-X Concrete			CU.Yds.	108.6
* Reinforcement Bars			Lbs.	42220
Structural Steel			Lbs.	139490

* Includes quantities in Concrete parapets shown on sheet # 9

DESIGNED	O.H. Hogemann
CHECKED	R.Kowit
DRAWN	O.H.H. R.P.B. M. Miller
CHECKED	R.K.

March 29 1962

EXAMINED — H. G. Baumann, Engineer of Bridge and Traffic Structures
PASSED — Engineer of Design
APPROVED — R. R. Bartelsmeyer, Chief Highway Engineer

SUPERSTRUCTURE
COUNTY HIGHWAY 19 OVER F.A. RT. 11
F.A. RT. 11 – SEC. 10-71HB
CHAMPAIGN COUNTY
STATION 1780+09.74

10-16-04 HPG - Add details to parapet, generally. Total Cl. X Conc. from 181.4 to 194 ; Cl. X Conc., Paint. 34,735 to 40,985.

FILE NAME = c:\pw_work\PWIDOT\SIMSGM\d0184265\D570865-Bridge Repair Plans.dgn	USER NAME = simsgm	DESIGNED -	REVISED -
		DRAWN -	REVISED -
	PLOT SCALE = 40.0001 ' / IN.	CHECKED -	REVISED -
	PLOT DATE = 2/26/2010	DATE -	REVISED -

STATE OF ILLINOIS
DEPARTMENT OF TRANSPORTATION

AS–BUILT PLANS – SN 010–0146
FOR INFORMATION ONLY

SCALE: | SHEET NO. 8 OF 10 SHEETS | STA. | TO STA.

F.A.I. RTE.	SECTION	COUNTY	TOTAL SHEETS	SHEET NO.
72	(10-71HB)BDR,BJR	CHAMPAIGN	14	11

CONTRACT NO. 70865
ILLINOIS FED. AID PROJECT