CONTRACT NO. 60828

F.A.P RTE.	SECTION	COUNTY	TOTAL SHEETS	SHEET NO.
90/94	1999-161-1	COOK	75	15
STA.		TO STA.		
FED. ROAD DIST. NO.	ILLINOIS	FED. AID PROJECT		

D-91-411-99

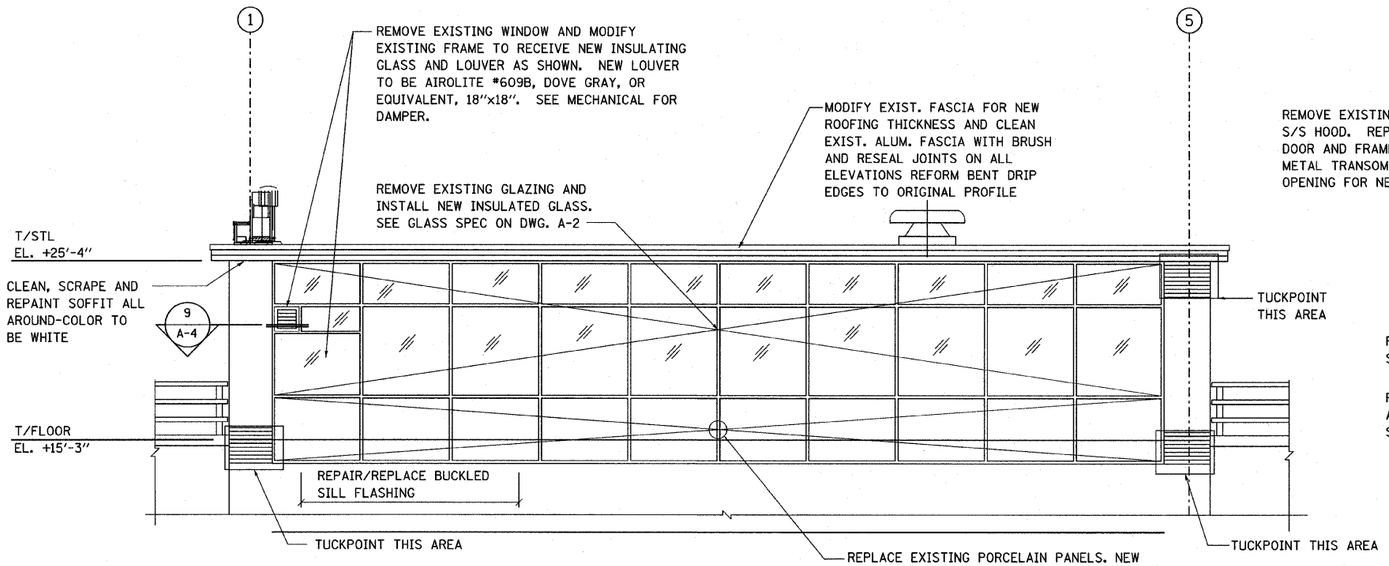

EAST ELEVATION

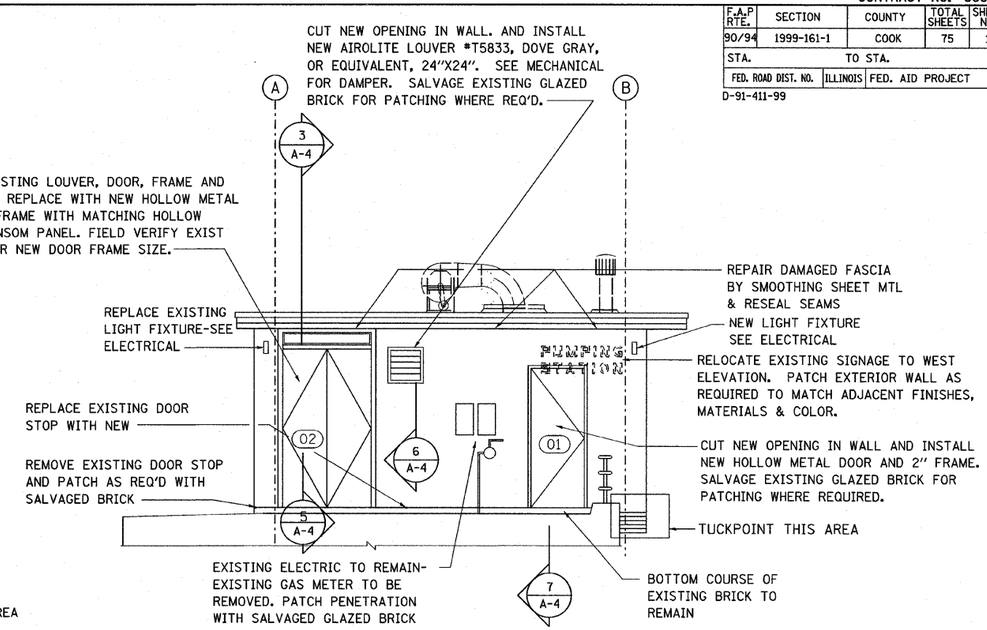

SOUTH ELEVATION

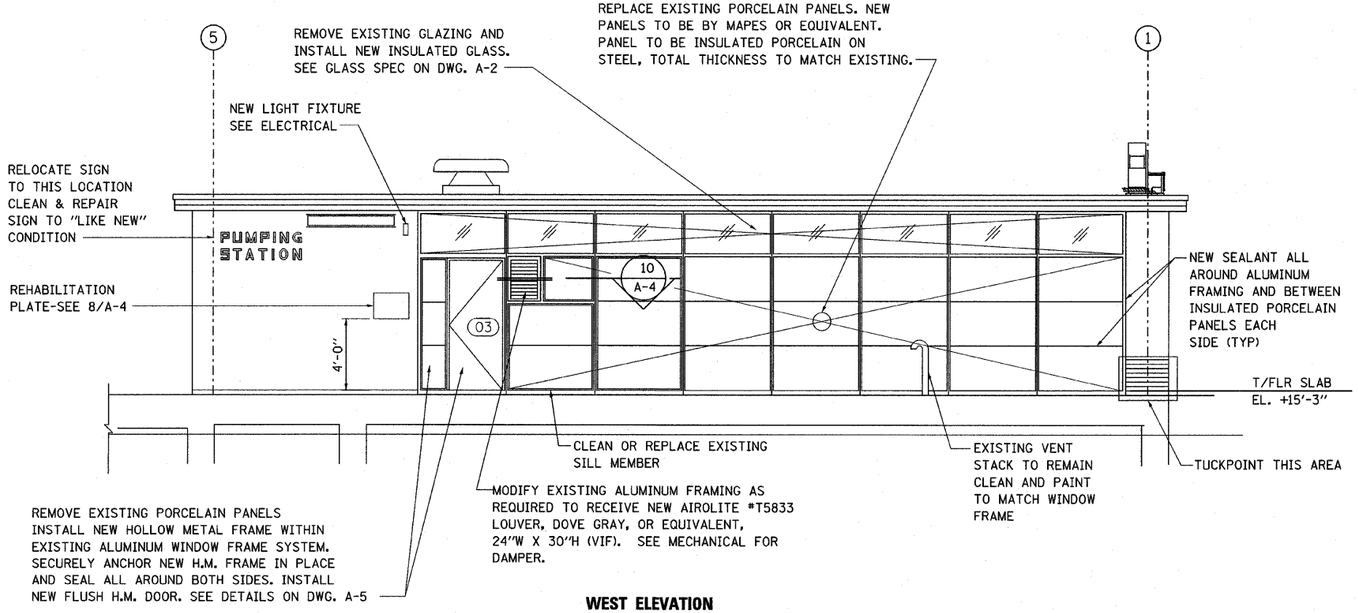

WEST ELEVATION

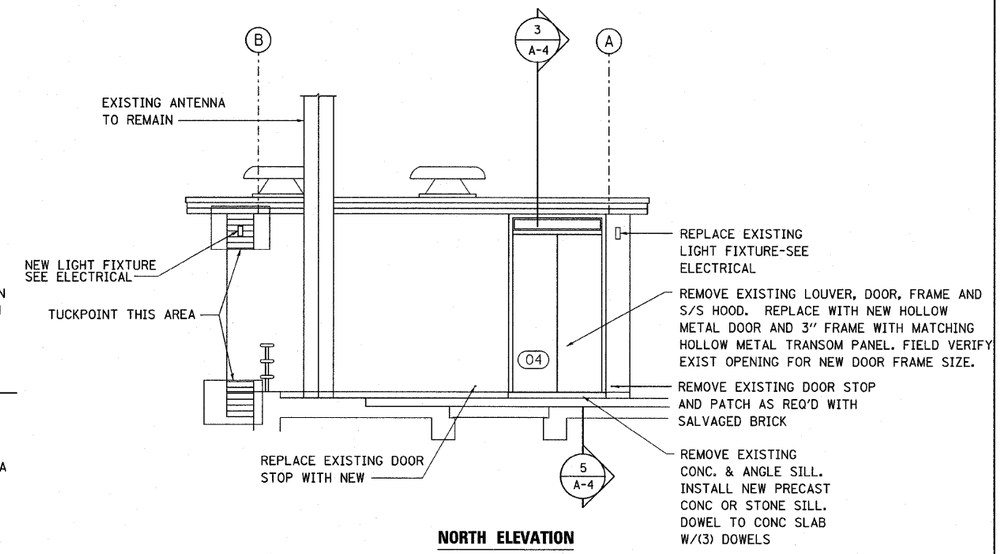

NORTH ELEVATION

4 3 2 1 0 4 8 — 1/4" = 1'-0"

Stanley Consultants INC.
8501 West Higgins Road, Suite 730, Chicago, Illinois 60631-2801
www.stanleygroup.com
Illinois Firm Registration No. 184-000533

REVISIONS	
NAME	DATE

ILLINOIS DEPARTMENT OF TRANSPORTATION

ARCHITECTURAL ELEVATIONS

SCALE: VERT. HORIZ. 1/4"=1'-0"
DATE: 3/23/2010
DRAWN BY: A.T.
CHECKED BY: D.L.

PLOT DATE = 3/22/2010
FILE NAME = 0160828-arch-A-01.dgn
PLOT SCALE = 1:4
USER NAME = $USER$