F.A.I. RTE.	SECTION	COUNTY	TOTAL SHEETS	SHEET NO.
94	•	COOK	764	15
STA. 88+60 (SB I-57) 1126+91 (SB FORD)		TO STA. 1313+00 (SB RYAN)		
FED. ROAD DIST. NO.	ILLINOIS	FED. AID PROJECT		

• (1516.1, 1717, & 1818) R-5

62593

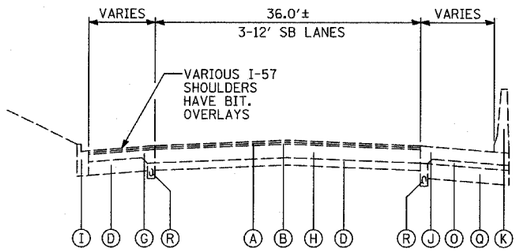

EXISTING SB I-57 MAINLINE PAVEMENT
WEST OF PARNELL AVENUE

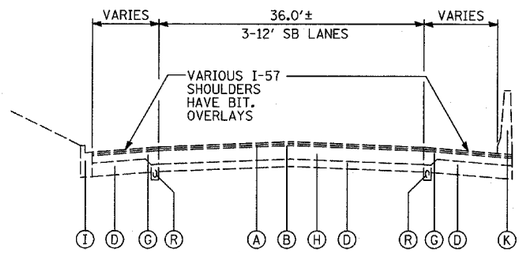

EXISTING SB I-57 MAINLINE PAVEMENT
BETWEEN PARNELL AND AVENUE WENTWORTH AVENUE

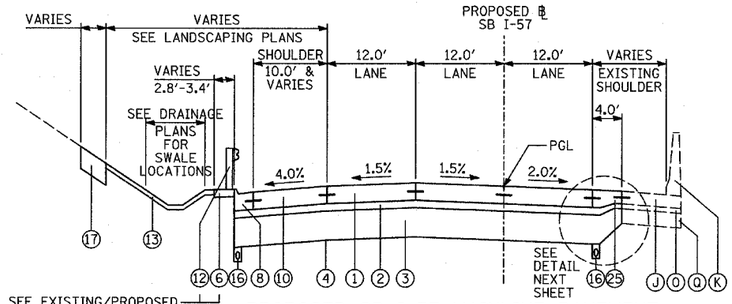

PROPOSED SB I-57 MAINLINE PAVEMENT
EAST OF HALSTED STREET

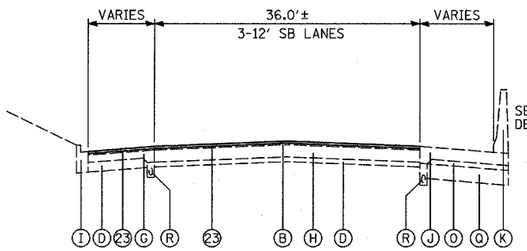

PROPOSED SB I-57 MAINLINE PAVEMENT
RESURFACING WEST OF HALSTED STREET

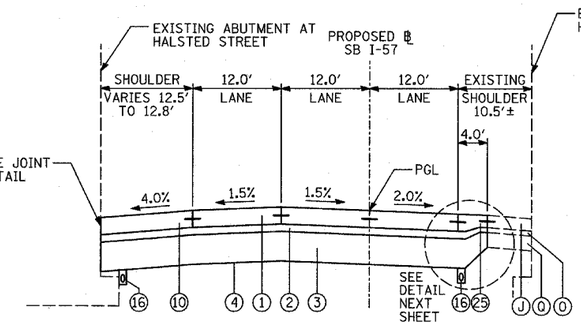

PROPOSED SB I-57 MAINLINE PAVEMENT
AT HALSTED STREET OVERPASS
(SEE CROSS-STREET OVERPASS FOOTING DETAILS)

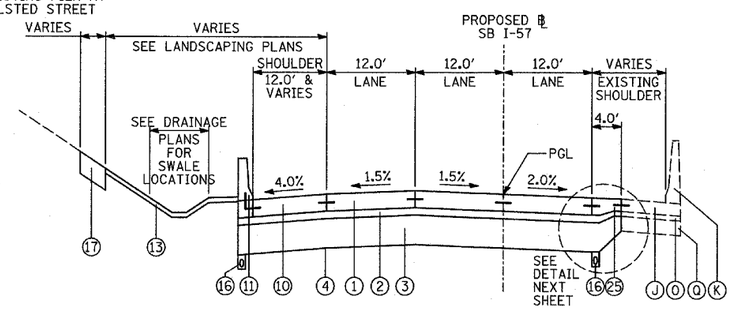

PROPOSED SB I-57 MAINLINE PAVEMENT
EAST OF HALSTED STREET

EXISTING LEGEND

ALL EXISTING PAVEMENT DEPTHS ARE FROM AS-BUILT PLANS AND ARE SUBJECT TO CHANGE

- (A) BIT CONC SURFACE COURSE, 1½"±
- (B) BIT CONC BINDER COURSE, 1½"±
- (C) BIT CONC BINDER COURSE, 4¾"±
- (D) SUB-BASE GRANULAR MATERIAL, 4"±
- (E) SUB-BASE GRANULAR MATERIAL, 6"±
- (F) CRUSHED STONE, 5"±
- (G) PCC SHOULDERS, 9"±
- (H) PCC BASE COURSE, 9"±
- (I) COMB CONC CURB & GUTTER
- (J) PCC PAVEMENT, 10"± (W/ PAVEMENT FABRIC, 80 LBS±/100 SF)
- (K) CONCRETE BARRIER WALL
- (L) PCC SHOULDERS, 11"±
- (M) CTA BALLAST STONE; REGRADE AS NECESSARY (INCLUDE REGRADING IN THE COST OF "CONCRETE BARRIER, SINGLE FACE, 42 INCH HEIGHT (SPECIAL)")
- (N) JOINTED PCC PAVEMENT, 11"±
- (O) STABILIZED SUB-BASE, 4"±
- (P) SUB-BASE GRANULAR MATERIAL, 24"±
- (Q) SUB-BASE GRANULAR MATERIAL, 12"±
- (R) EXISTING PIPE UNDERDRAIN (REMOVAL TO BE PAID FOR SEPARATELY. SEE SPECIAL PROVISION "PIPE UNDERDRAIN REMOVAL") △1

STRUCTURAL PAVEMENT DESIGN INFORMATION

STRUCTURAL DESIGN TRAFFIC: YEAR = 2020
PV = 322,920 SU = 7,020 MU = 21,060
ROAD/STREET CLASSIFICATION: CLASS 1
PERCENT OF STRUCTURAL DESIGN TRAFFIC IN DESIGN LANE:
P = 8% S = 37% M = 37%
TRAFFIC FACTOR: ACTUAL TF = 116.08 AC TYPE = N/A
MINIMUM TF = 8.26
AC GRADE: BINDER = - SURFACE = -
SUBGRADE SUPPORT RATING: SSR = 2.00
ILLINOIS BEARING RATIO: IBR = 3.00

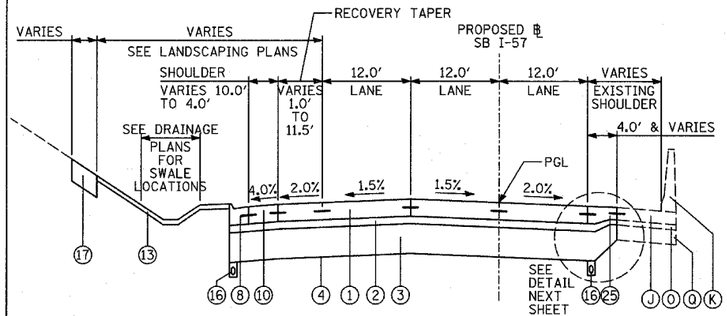

PROPOSED SB I-57 MAINLINE PAVEMENT
BETWEEN HALSTED STREET AND HALSTED STREET EXIT RAMP

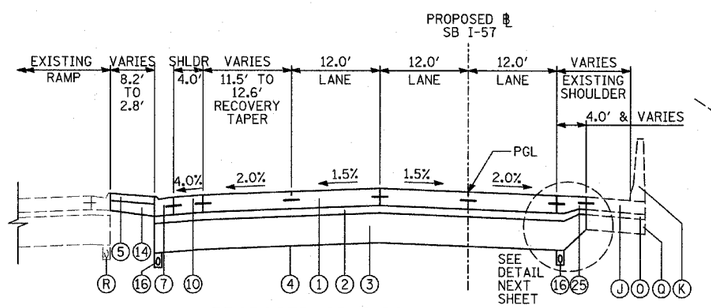

PROPOSED SB I-57 MAINLINE PAVEMENT
AT HALSTED STREET EXIT RAMP GORE

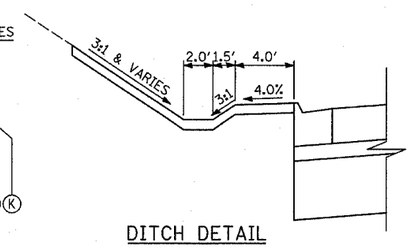

DITCH DETAIL

BITUMINOUS MIXTURE REQUIREMENT

ITEM	AC TYPE	VOIDS	RAP %
SHOULDER RESURFACING			
1½" & 1¾" DEPTH: BITUMINOUS CONCRETE SURFACE COURSE, SUPERPAVE, MIX "D", N70	PG 64-22	4%@70 Gyr.	10
MAINLINE RESURFACING			
1¾" DEPTH: POLY. BIT. CONC. SURFACE COURSE, SUPERPAVE, MIX "F", N105	SBS/SBR PG 76-22	4%@105 Gyr.	0
4" DEPTH: POLY. BIT. CONC. SURFACE COURSE, SUPERPAVE, MIX "F", N105	SBS/SBR PG 76-22	4%@105 Gyr	0
POLY. BIT. CONC. BINDER COURSE, SUPERPAVE, IL-19, N105	SBS/SBR PG 76-22	4%@105 Gyr	0
TEMPORARY PAVEMENT			
POLY. BIT. CONC. SURFACE COURSE, SUPERPAVE, MIX "F", N105	SBS/SBR PG 76-22	4%@105 Gyr	0
POLY. BIT. CONC. BINDER COURSE, SUPERPAVE, IL-19, N105	SBS/SBR PG 76-22	4%@105 Gyr	0
STABILIZED SUBBASE, 6"	PG 58-22	3%@50 Gyr	25
BITUMINOUS REPLACEMENT OVER PATCHES	PG 64-22	4%@70 Gyr	15

THE UNIT WEIGHT USED TO CALCULATE ALL BITUMINOUS SURFACE MIXTURES IS 112 LB/SQ YD/IN.

POTENTIAL UNDERCUT

"POROUS GRANULAR EMBANKMENT, SUBGRADE" (PGES) HAS BEEN RECOMMENDED FOR USE AT LOCATIONS WITH SOILS THAT TEND TO BE UNSTABLE OR UNSUITABLE. THE ACTUAL NEED FOR REMOVAL AND REPLACEMENT WITH PGES WILL BE DETERMINED IN THE FIELD AT THE TIME OF CONSTRUCTION BY THE GEOTECHNICAL ENGINEER. ALL POTENTIALLY UNSTABLE SOILS SHOULD BE TESTED WITH A STATIC CONE PENETROMETER AND TREATED IN ACCORDANCE WITH ARTICLE 303.13 AND THE UNDERCUT GUIDELINES IN THE IDOT SUBGRADE STABILITY MANUAL. IF UNSTABLE AND/OR UNSUITABLE MATERIALS ARE ENCOUNTERED, THE SOIL SHALL BE REMOVED AND REPLACED WITH PGES AS DETERMINED BY THE GEOTECHNICAL ENGINEER. IF UNSTABLE AND/OR UNSUITABLE MATERIAL IS NOT ENCOUNTERED, THEN THE QUANTITY SHALL BE DEDUCTED AND NO ADDITIONAL COMPENSATION WILL BE DUE THE CONTRACTOR.

(SEE SCHEDULE OF QUANTITIES FOR LOCATIONS)

TY·LIN INTERNATIONAL

NOTES:

1. REFER TO PAVEMENT JOINTING AND ELEVATION PLANS FOR DESCRIPTIONS AND DETAILS OF PAVEMENT JOINTS.

PROPOSED LEGEND

- (1) CONTINUOUSLY REINFORCED PORTLAND CEMENT CONCRETE PAVEMENT 14"; & PAVEMENT REINFORCEMENT, 14"
- (2) STABILIZED SUB-BASE, 6" (BITUMINOUS AGGREGATE MIXTURE)
- (3) SUB-BASE GRANULAR MATERIAL, TYPE B 24"
- (4) GEOTECHNICAL FABRIC FOR GROUND STABILIZATION
- (5) CONCRETE MEDIAN SURFACE, 6 INCH (SPECIAL)
- (6) CONCRETE MEDIAN SURFACE, 6 INCH (SPECIAL) (WITHOUT STAMPED PATTERN)
- (7) COMBINATION CONCRETE CURB AND GUTTER, TYPE M-2.24
- (8) COMBINATION CONCRETE CURB AND GUTTER, TYPE M-4.24
- (9) COMBINATION CONCRETE CURB AND GUTTER, TYPE M-4.48
- (10) PORTLAND CEMENT CONCRETE SHOULDERS 14"
- (11) CONCRETE BARRIER, SINGLE FACE, 32 INCH HEIGHT; BARRIER BASE; BARRIER WALL MARKERS (PER IDOT STD. 635001 & 635006)
- (12) TRAFFIC BARRIER TERMINAL, TYPE VARIES
- (13) TOPSOIL FURNISH AND PLACE, 4"; SEEDING, CLASS 2A; EROSION CONTROL BLANKET
- (14) AGGREGATE FILL (INCLUDED IN THE COST OF "CONCRETE MEDIAN SURFACE, 6" (SPECIAL)") (MATCH DEPTH TO ADJACENT CURB & GUTTER)
- (15) CONCRETE BARRIER, SINGLE FACE, 42 INCH HEIGHT (SPECIAL); BARRIER BASE; CTA FENCE (SEE DETAILS); BARRIER WALL MARKERS (PER IDOT STD. 635001 & 635006)
- (16) PIPE UNDERDRAIN, 6" (SEE DETAILS)
- (17) TOPSOIL FURNISH AND PLACE, 12"; COMPOST FURNISH AND PLACE, 6"; EROSION CONTROL BLANKET; SEEDING (SEE PLAN FOR CLASS)
- (18) ELECTRICAL DUCTBANK (SEE ELECTRICAL INFRASTRUCTURE PLANS)
- (19) CONCRETE BARRIER, SINGLE FACE, 32 INCH HEIGHT (MODIFIED); BARRIER BASE; BARRIER WALL MARKERS (PER IDOT STD. 635001 & 635006)
- (20) PORTLAND CEMENT CONCRETE SHOULDERS 9"
- (21) 1½" SHOULDER RESURFACING: BITUMINOUS CONCRETE SURFACE COURSE, SUPERPAVE, MIX "D", N70, 1½"
- (22) 1¾" SHOULDER RESURFACING: BITUMINOUS CONCRETE SURFACE COURSE, SUPERPAVE, MIX "D", N70, 1¾"
- (23) 1¾" MAINLINE RESURFACING: POLYMERIZED BITUMINOUS CONCRETE SURFACE COURSE, SUPERPAVE, MIX "F", N105, 1¾"
- (24) 4" MAINLINE RESURFACING: POLYMERIZED BITUMINOUS CONCRETE SURFACE COURSE, SUPERPAVE, MIX "F", N105, 1¾"; POLYMERIZED BITUMINOUS CONCRETE BINDER COURSE, SUPERPAVE, IL-19, N105, 2¼"
- (25) PORTLAND CEMENT CONCRETE PAVEMENT, 14" (JOINTED)

REVISIONS	
NAME	DATE
△1 ADDENDUM 1	05/08/06

ILLINOIS DEPARTMENT OF TRANSPORTATION

F.A.I. 94 (DAN RYAN EXPRESSWAY)

EXISTING & PROPOSED TYPICAL SECTIONS
SB I-57
(SHEET 1 OF 8)

SCALE: NONE DRAWN BY: MPG
DATE: MARCH 1, 2006 CHECKED BY: TGB

05/04/2006 01:56:09 PM