F.A.I. RTE.	SECTION	COUNTY	TOTAL SHEETS	SHEET NO.
57	*	COOK	916	617
STA.		TO STA.		
FED. ROAD DIST. NO.	ILLINOIS	FED. AID PROJECT		

CONTRACT NO. 62304
*(1516.1, 1717, & 1818) R-4

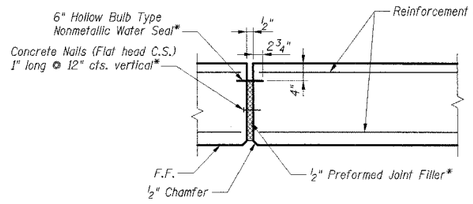

EXPANSION JOINT

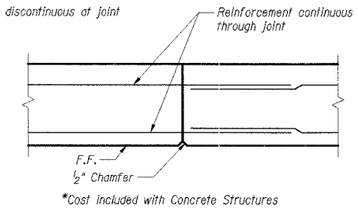

*Cost included with Concrete Structures

CONSTRUCTION JOINT

JOINT DETAILS
RETAINING WALLS AND WALL-MOUNTED TRAFFIC BARRIERS

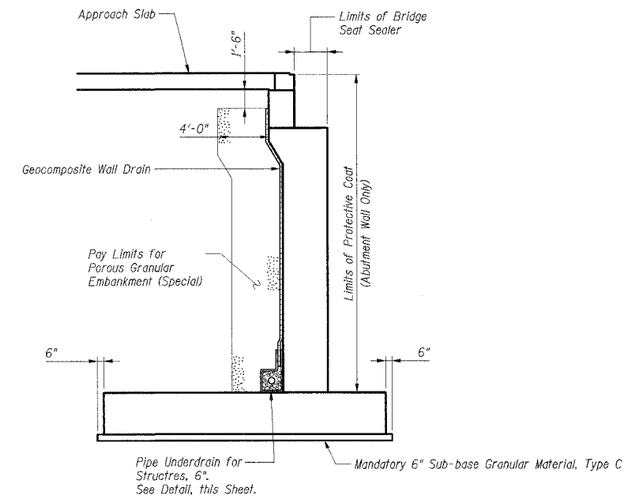

Note: Pipe Underdrains shall be protected at staged construction lines and connected to Pipe Underdrains installed in subsequent stages. Cost of protecting and connecting the Pipe Underdrains is included with Pipe Underdrains for Structures, 6".

TYPICAL WALL SECTION

Abutment wall shown. Retaining walls similar except as noted.

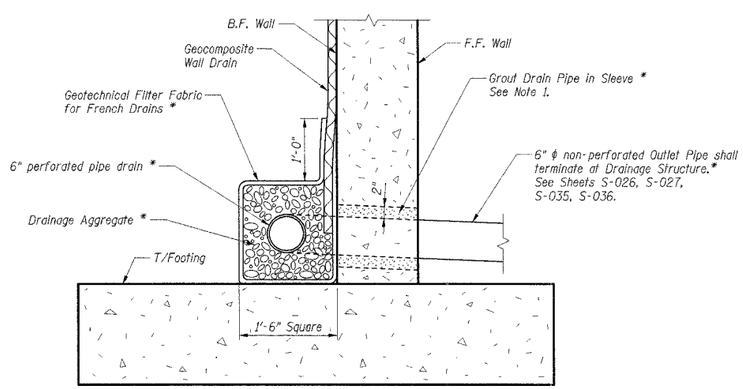

PIPE UNDERDRAIN DETAIL

* Included in cost of Pipe Underdrains for Structures. See Special Provisions for material and aggregate gradation specifications.

Notes:

1. Prior to the placement of the pipe underdrain sleeve, the Engineer shall determine the slope required for the pipe underdrain to enter the drainage structure.
2. F.F. indicates front face.
3. B.F. indicates back face.
4. For Bills of Material, see Shts. S-029 & S-039.

SHT. S-040

REVISIONS	
NAME	DATE

ILLINOIS DEPARTMENT OF TRANSPORTATION
F.A.I. ROUTE 57 (INTERSTATE 57)
I-57 NB OVER WB CONNECTOR
SN 016-0072 OLD, SN 016-2852 NEW
STA. 238+73.54
COOK COUNTY, SECTION (1516.1, 1717, & 1818) R-4

ABUTMENT AND RETAINING WALL
TYPICAL DETAILS

DATE: 03/07/06
DRAWN BY: FD
CHECKED BY: RDS

TENG

TENG & ASSOCIATES, INC.
ENGINEERS/ARCHITECTS/PLANNERS
205 N. MICHIGAN AVE., CHICAGO, IL 60601
TELEPHONE: 312.616.0000

..\R59R9062A.DGN, ..\R60R06FE.DGN, ..\R59R9062A.DGN, ..\ABT00WZA.DGN, ..\ORD00W8.DGN, ..\ABT00BY-.DGN, ..\ORD00KW8-.DGN, ..\ORD00W8-.DGN, ..\ORD00W8-.DGN
3-9-2006, 15:06:40 \\FS-9000\PROJ_CVL\DOCUMENT\R30966\STRUCT\DGN\ORD00W8-.DGN
UDETC