F.A.I. RTE.	SECTION	COUNTY	TOTAL SHEETS	SHEET NO.
57	*	COOK	916	611
STA.		TO STA.		
FED. ROAD DIST. NO.	ILLINOIS	FED. AID PROJECT		

CONTRACT NO. 62304
*(1516.1, 1717, & 1818) R-4

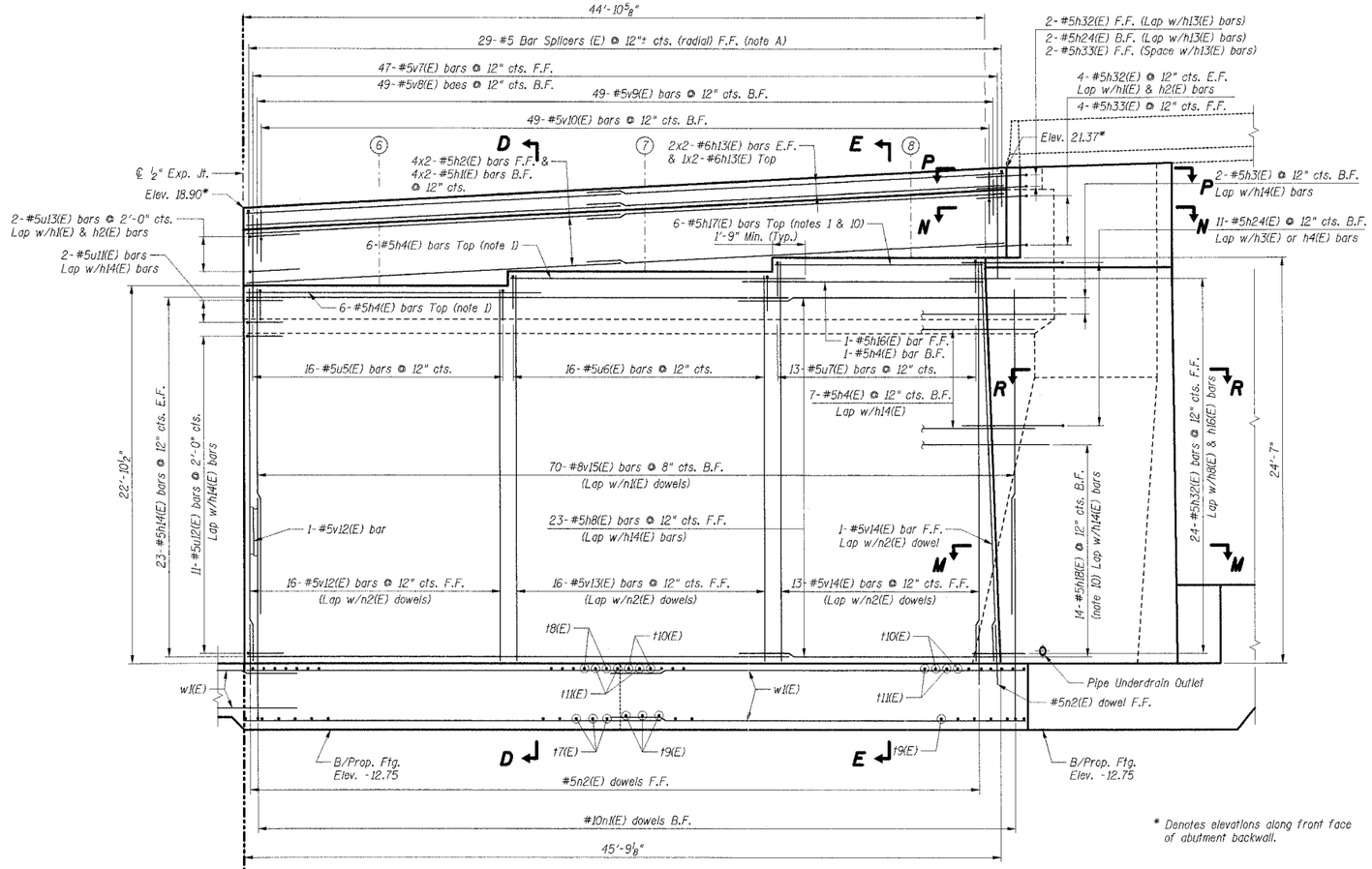

ELEVATION - NORTH ABUTMENT WALL II

MATCH LINE
See Sht. S-033

* Denotes elevations along front face of abutment backwall.

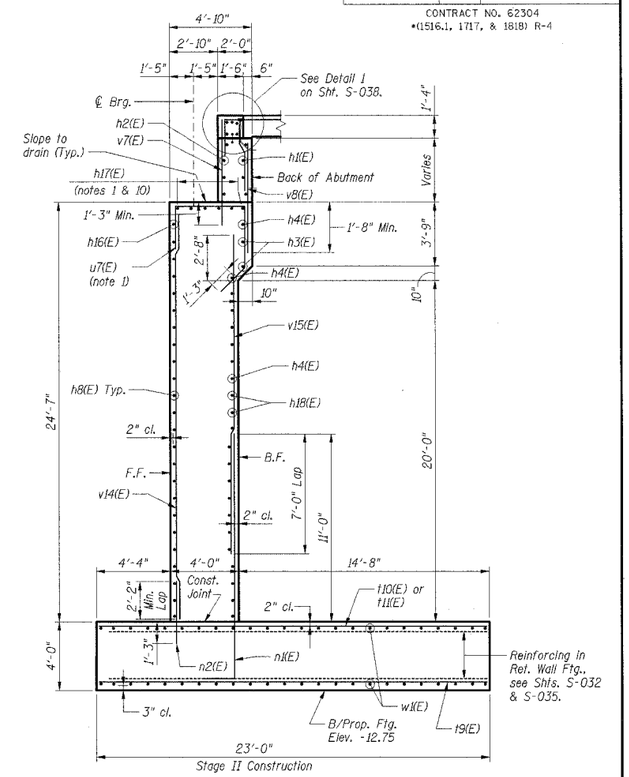

SECTION E-E

Lap Lengths		
Bar	Min. Vert. Lap	Min. Hor. Lap
#5	2'-2"	3'-0"
#6	2'-7"	3'-7"
#7	3'-5"	-
#8	4'-6"	4'-6"
#9	5'-9"	-

Note A: Adjust spacing and orientation of Bar Splicers as required to match Approach Pavement Reinforcement. See Roadway Plans.

Notes:

1. Space reinforcement to miss anchor bolts.
2. Reinforcement bars designated (E) shall be epoxy coated.
3. Bars indicated thus 4 x 2-#5 etc. indicates 4 lines of bars with 2 lengths per line.
4. F.F. denotes Front Face,
   B.F. denotes Back Face,
   E.F. denotes Each Face.
5. For Section D-D, see Sht. S-038.
   for Sections M-M thru R-R, see Sht. S-037.
6. For Bar List & Bill of Material, see Sht. S-039.
7. Work this sheet with Shts. S-030 & S-033.
8. For Abutment End Wiew and Wingwall Elevation, see Sht. S-035.
9. For additional reinforcement, see Sht. S-037.
10. Cut bars according to Cutting Diagram, Sht. S-039.
11. For typical wall details, see Sht. S-040.

SHT. S-034

REVISIONS	
NAME	DATE

ILLINOIS DEPARTMENT OF TRANSPORTATION
F.A.I. ROUTE 57 (INTERSTATE 57)
I-57 NB OVER WB CONNECTOR
SN 016-0072 OLD, SN 016-2852 NEW
STA. 238+73.54
COOK COUNTY, SECTION (1516.1, 1717, & 1818) R-4
NORTH ABUTMENT WALL II

DATE: 03/07/06
DRAWN BY: FD
CHECKED BY: TCU

TENG

TENG & ASSOCIATES, INC.
ENGINEERS/ARCHITECTS/PLANNERS
205 N. MICHIGAN AVE., CHICAGO, IL 60601
TELEPHONE: 312.616.0000

\\EXCEDWDP.DGN, \\XXX007T.DGN, \\SBL007BT.DGN, \\ABTGOMEC.DGN, \\BRBRIDGER.DGN, \\XXX007T.DGN, \\CPEDWDLDGN, \\XXX007T.DGN, \\ABTGOMEC.DGN, \\ABTGOWEC.DGN, \\XXX007T.DGN, \\XXX007T1.DGN, \\XXX007T1.DGN, \\ABTGOW4F.DGN, \\ABTG03V96.DGN, \\ABTG03V96.DGN, \\TSL009VT.DGN
3-8-2006, 15:08:46 \\FS-000\PROJ_CIVIL\DOCUMENT\93096\STRUCT\DGN\ABTG00Y9T.DGN
LDETC