F.A.I. RTE.	SECTION	COUNTY	TOTAL SHEETS	SHEET NO.
57	*	COOK	916	573
STA.		TO STA.		
FED. ROAD DIST. NO. 1	ILLINOIS	FED. AID PROJECT		

CONTRACT NO. 62304
*(1516.1, 1717, & 1818) R-4

EXISTING STRUCTURE

Structure No. 016-0073 was built in 1960 as F.A.I. 57 and C.T.A. over southbound F.A.I. 90, I-94, and the C.T.A. The structure consists of a 2 cell tunnel containing C.T.A. tracks in the eastern cell and southbound I-94 in the western cell. The substructure consists of reinforced concrete abutments and a pier founded on concrete piles which support a precast concrete deck beam roof system. Traffic is to be maintained using staged construction during rehabilitation.

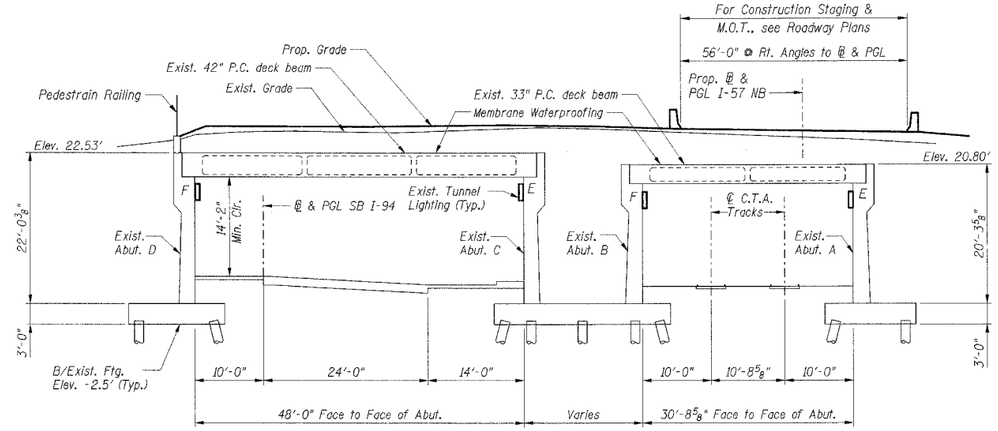

SECTION

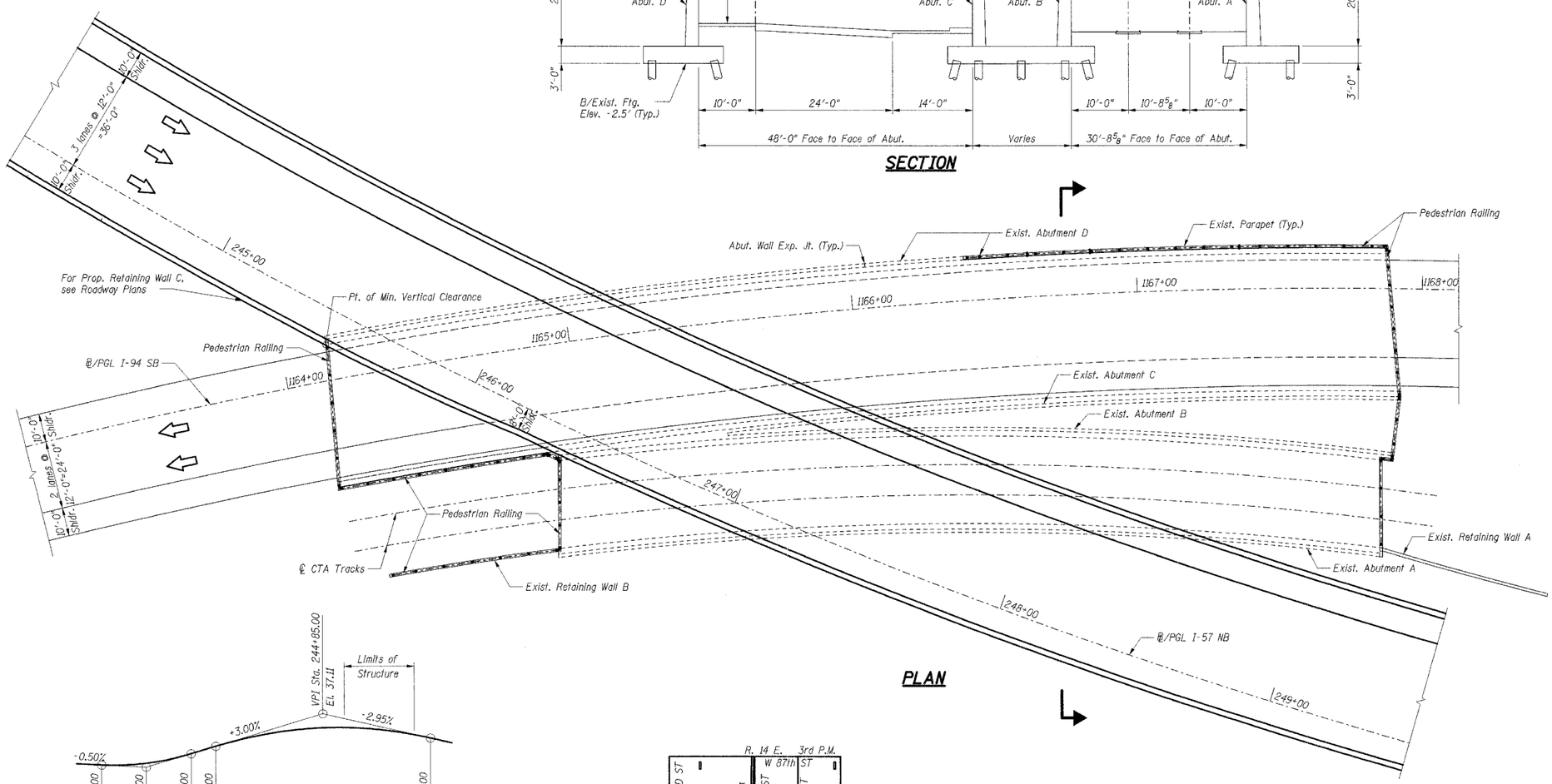

PLAN

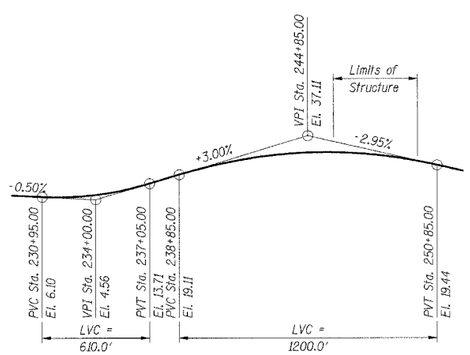

PROFILE GRADE NB INTERSTATE 57

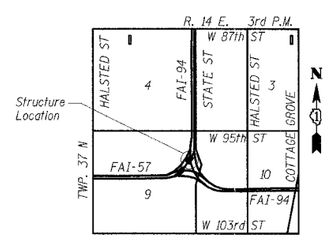

LOCATION MAP

DESIGN SPECIFICATIONS

2002 AASHTO Standard Specifications for Highway Bridges

DESIGN LOADING

Roadway Live Load: HS20-44 & Alt.

DESIGN STRESSES

Existing Construction
Cast in Place Concrete, f'c = Unknown
Reinforcement, fy = 40,000 psi
Precast Concrete, f'c = Unknown
Prestressing Steel, f's = 250,000 psi

SCOPE OF WORK

The work under this contract includes repairs to the top of the existing structure. Repairs to the underside of the deck beams and substructure are included in other contracts.

TOTAL BILL OF MATERIAL

Item	Unit	Total
Pedestrian Railing	Foot	477.0
Membrane Waterproofing (Special)	Sq Ft	32,000
Portland Cement Mortar Fairing Course	Foot	500
Fence Removal	Foot	477
Grout Repair	Foot	515
Keyway Repair	Foot	500
Silicone Joint Bridge Sealer	Foot	1,110
Polymer Concrete	Cu Yd	2.6

GENERAL NOTES:

Plan dimensions and details relative to existing structures have been taken from existing plans and are subject to nominal construction variations. It shall be the Contractor's responsibility to verify such dimensions and details in the field and make necessary approved adjustments prior to construction or ordering of materials. Such variations shall not be cause for additional compensation for a change in the scope of the work, however, the Contractor will be paid for the quantity actually furnished at the unit price bid for the work.

INDEX OF SHEETS

S-001 GENERAL PLAN AND ELEVATION
S-002 DECK PLAN I
S-003 DECK PLAN II
S-004 MEMBRANE WATERPROOFING DETAILS
S-005 PEDESTRIAN RAILING

SHT. ST-001

REVISIONS	
NAME	DATE

STATE OF ILLINOIS 081-00473Z CHICAGO LICENSED STRUCTURAL ENGINEER
3/8/06
EXPIRES 11/30/06

ILLINOIS DEPARTMENT OF TRANSPORTATION
F.A.I. ROUTE 57 (INTERSTATE 57) OVER
F.A.I. ROUTE I-94 SB & CTA TRACKS-BRIDGE REPAIRS
SN 016-0073
COOK COUNTY
SECTION (1516.1, 1717, & 1818) R-4
GENERAL PLAN & ELEVATION

DATE: 03/07/06
DRAWN BY: VV
CHECKED BY: RDS

TENG
TENG & ASSOCIATES, INC.
ENGINEERS/ARCHITECTS/PLANNERS
205 N. MICHIGAN AVE., CHICAGO, IL 60601
TELEPHONE 312.616.0000

..\DGN\003K3Y.DGN, ..\GPEGOW4LDGN, ..\GPEGOW_T.DGN, ..\BRBORDER.DGN, ..\ALTGOVSL.DGN, ..\TP00GWOLLDGN, ..\RDWGOVSG.DGN, ..\TP00G746.DGN, ..\SURGOVW.DGN
3-01-2006, 15:37:31 \\FS-000\PROJ_CIVIL\DOCUMENT\D930860\STRUCTURAL\GPEGOW_T.DGN UDETC