F.A.I. RTE.	SECTION	COUNTY	TOTAL SHEETS	SHEET NO.
57	*	COOK	916	575C
STA.		TO STA.		
FED. ROAD DIST. NO. 1	ILLINOIS	FED. AID PROJECT		

CONTRACT NO. 62304
*(1516.1, 1717, & 1818) R-4

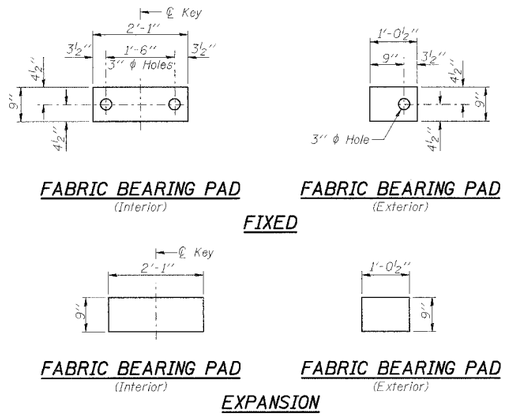

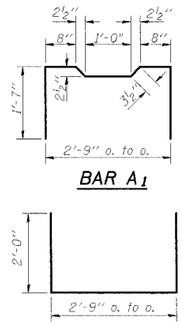

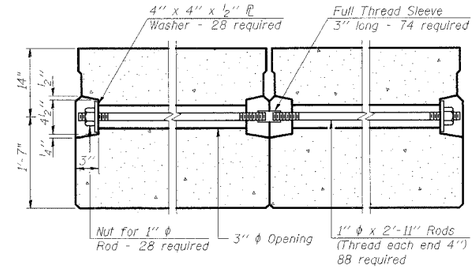

TYPICAL TRANSVERSE TIE ASSEMBLY

* These quantities include all 33" P.P.C. Deck Beams

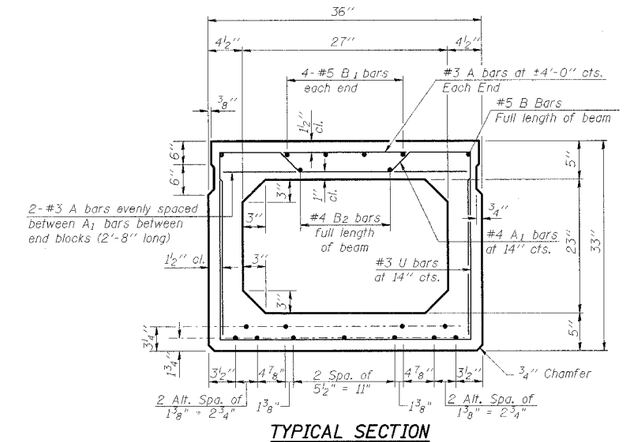

TYPICAL SECTION

9 - ½" ϕ Strands. Each Strand Stressed to 30,900 Lbs.
7 Strands 1¾" up, 2 Strands 3¼" up

Note:
Place strands symmetrically about ℄ of beam.

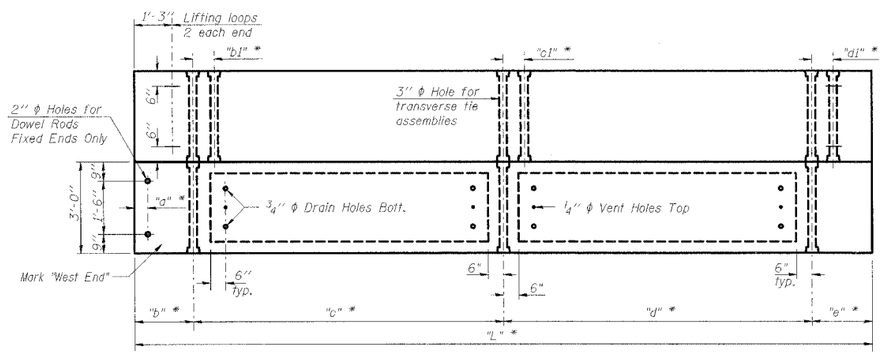

PLAN

* See Sheet ST-003G for table of dimensions

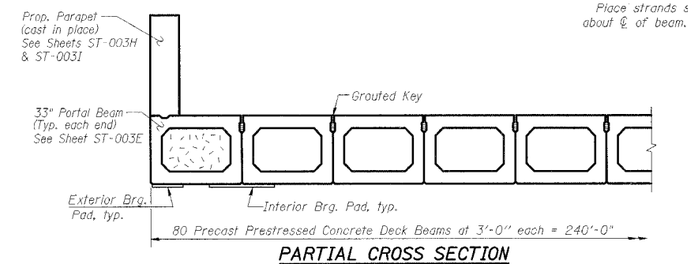

PARTIAL CROSS SECTION

* BAR LIST

Bar	No.	Size	Length	Shape
A	8	#3	2'-8"	—
A1	33	#4	6'-1"	⊓
B	2	#5	33'-10"	—
B1	4	#5	12'-0"	—
B2	2	#4	33'-10"	—
U	25	#3	6'-9"	⊔
U1	8	#4	6'-9"	⊔

* For one beam only

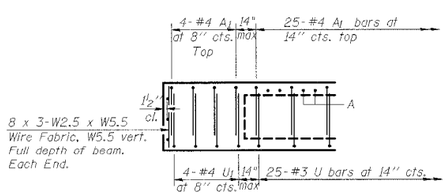

END ELEVATION

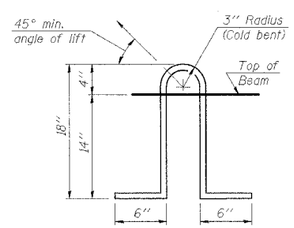

LIFTING LOOP DETAIL

NOTES

1. Prestressing steel shall be uncoated high strength, low relaxation 7-wire strand, Grade 270.
2. The nominal diameter shall be ½" and the nominal cross-sectional area shall be 0.153 sq. in.
3. Lifting loops shall be 3 - ½" ϕ-270 ksi strands, as shown. Alternate approved lifting devices are also acceptable.
4. The 1" ϕ rods in the transverse tie assembly shall be tightened to a snug fit and the threads set. Pockets that receive transverse tie bar on outside shall be filled with grout after transverse tie assembly is in place.
5. Non prestressing steel shall conform to AASHTO M-31 or M-322 Grade 60.
6. The bearing seat surfaces shall be adjusted by shimming to assure firm and even bearing. Two ⅛" fabric adjusting shims of the dimensions of the Exterior Bearing Pad shall be provided for each bearing.
7. Keyway surfaces shall be cleaned to remove form oil or other bond breaking material prior to shipment of the beams. Cleaning shall be done by sandblasting the keyway areas between top of the beam and the bottom edge of the key.
8. Corrosion Inhibitor, as covered in the Special Provisions, shall be used in the concrete for precast prestressed concrete deck beams.
9. Required Release Strength, f'ci, shall be 4,000 p.s.i.
10. When a Waterproofing Membrane System is specified, the top surface of the beams shall be screeded with a straightedge and finished with a hand float. The finished surface shall be free of depressions or high spots with sharp corners and the top edge of keys shall be rounded or chamfered a minimum of ¼".
11. Keyway surfaces shall be cleaned to remove form oil or other bond breaking material prior to shipment of the beams. Cleaning shall be done by sandblasting the keyway areas between the top of the beam and the bottom edge of the key.
12. For additional tie-rods in B125 and B202, see Typical Transverse Tie Assembly on Sht. ST-003E.

BILL OF MATERIAL

Item	Unit	Total
Precast Prestressed Concrete Deck Beams (33" Depth)	Sq Ft	7,883

SHT. ST-003C

REVISIONS		
	NAME	DATE
1	ADDENDUM 1	05/08/06

ILLINOIS DEPARTMENT OF TRANSPORTATION
F.A.I. ROUTE 57 (INTERSTATE 57) OVER
F.A.I. ROUTE I-94 SB & CTA TRACKS-BRIDGE REPAIRS
SN 016-0073
COOK COUNTY
SECTION (1516.1, 1717, & 1818) R-4
33" P.P.C. DECK BEAM DETAILS

DATE: 05/08/06
DRAWN BY: MDB
CHECKED BY: MJK

TENG
TENG & ASSOCIATES, INC.
ENGINEERS/ARCHITECTS/PLANNERS
205 N. MICHIGAN AVE., CHICAGO, IL 60601
TELEPHONE: 312.616.0000

1 Added Sheet 05/08/2006, MDB

s:\BRIDGE\R.DGN,..\SDTOYPLOG.DGN,..\ALTOYPLOG.DGN,..\SPECOWALDGN,..\XWPROWS7.DGN,..\XWPROWS7C.DGN,..\YP000746.DGN,..\SUROGWLDGN
5-07-2006,11:59:00 T:\DOCUMENT\93496001\TRACT\10601\ST001WLDGN
LEEAC