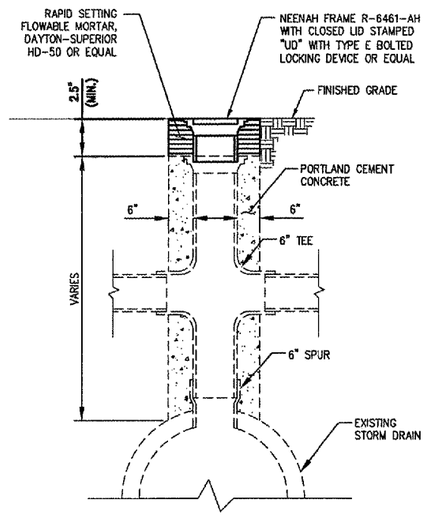

PROPOSED TURF
UNDERDRAIN INSPECTION
HOLE ADJUSTMENT

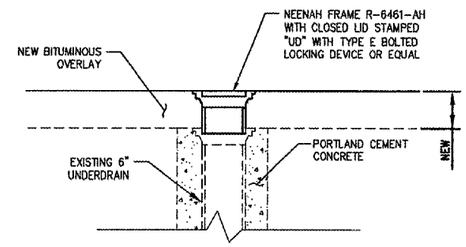

PROPOSED IN-PAVEMENT
UNDERDRAIN INSPECTION
HOLE ADJUSTMENT

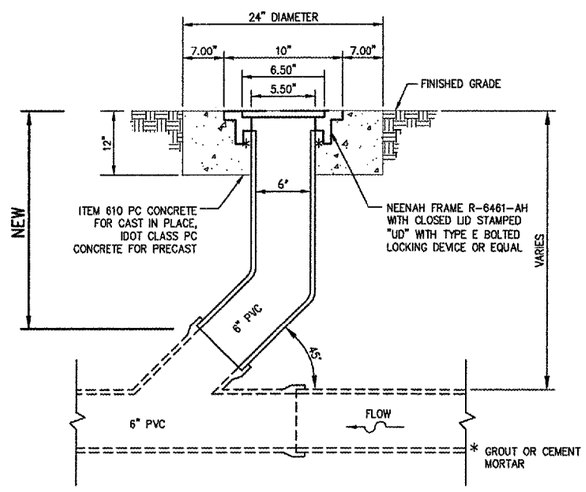

PROPOSED UNDERDRAIN
CLEANOUT ADJUSTMENT

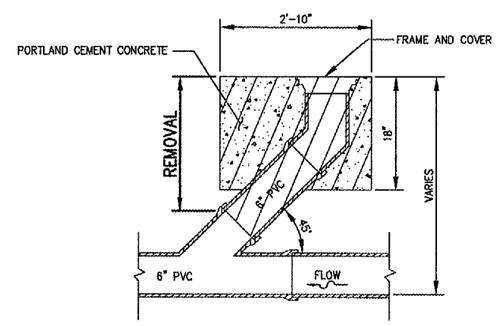

EXISTING UNDERDRAIN
CLEANOUT REMOVAL

WA059

HANSON

HANSON PROFESSIONAL SERVICES INC.

815 Commerce Drive, Suite 200
Oak Brook, Illinois 60523
Telephone: 630.990.3800
Fax: 630.990.3801

Illinois Professional Design Firm
Registration No. 184-001084

© Copyright Hanson Professional Service Inc. 2007

WAUKEGAN REGIONAL AIRPORT
WAUKEGAN PORT DISTRICT

3580 North McAree Road
Waukegan, Illinois 60087
Telephone: 847.244.0066
Fax: 847.244.3813

WAUKEGAN REGIONAL AIRPORT
WAUKEGAN, ILLINOIS

REPAIR AND OVERLAY WEST
PORTION OF TAXIWAY A

AIP PROJECT NO. 3-17-0105-B39
IDA PROJECT NO. UGN-3751

No.	Drawing Issue Description	Date	By

Date
JANUARY 11, 2008

Sheet Title
UNDERDRAIN
ADJUSTMENT DETAILS

07A0102
Project Number

LDH 12/11/07
Layout By Date

LDH 12/11/07
Designed By Date

RMH 01/08/08
Reviewed By Date

LDH
Drawn By

55
Sheet No.

I:\07JOBS\08037\07A0102\DRAWINGS\SHEETS\55-UNDERDRAIN ADJUSTMENT DETAILS.DWG APR 11, 2008 8:16AM HAUSMIOBGD