CONTRACT NO. 70113

F.A.P. RTE.	SECTION	COUNTY	TOTAL SHEETS	SHEET NO.
323	(149,150)RS-3	EDGAR	83	54
STA.		TO STA.		
FED. ROAD DIST. NO.	ILLINOIS	FED. AID PROJECT		

CAST-IN-PLACE BOX CULVERT END SECTION DETAIL
CULVERT NO. 3, STATION 1833 + 78.50

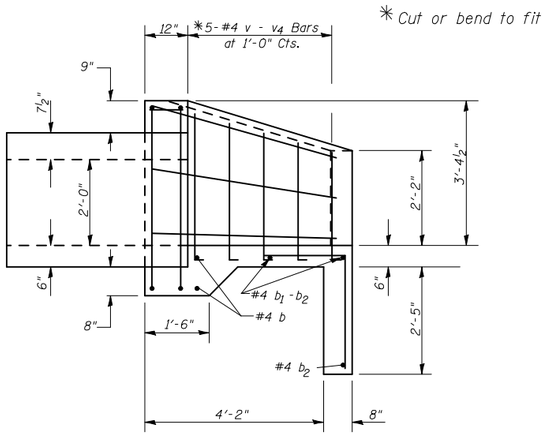

* Cut or bend to fit

HALF SIDE ELEVATION

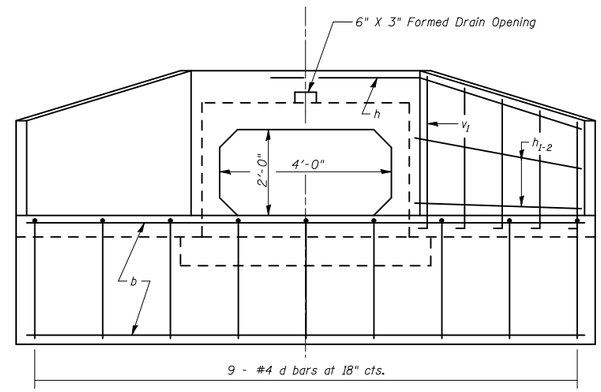

END ELEVATION

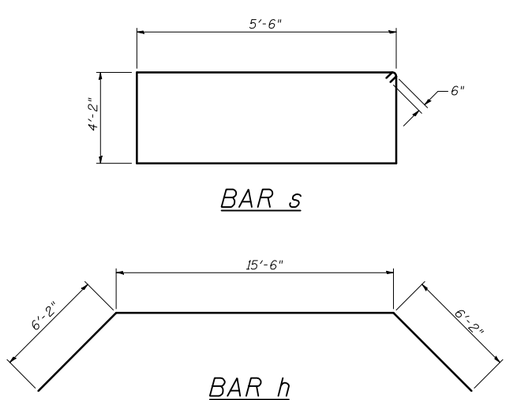

BAR s

BAR h

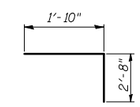

BAR d

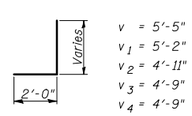

v BARS

v = 5'-5"
v1 = 5'-2"
v2 = 4'-11"
v3 = 4'-9"
v4 = 4'-9"
v5 = 4'-6"

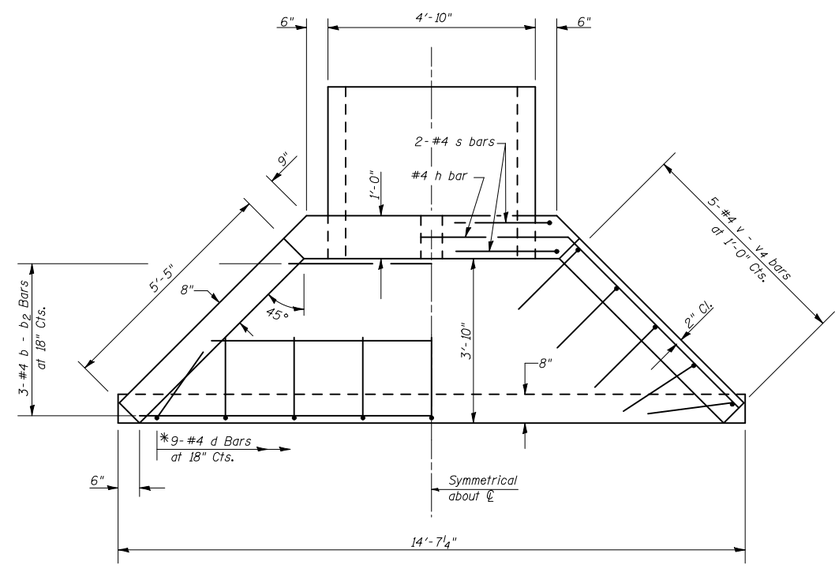

* Cut or bend to fit

PLAN

NOTES

All bars should be rounded and shall conform to the requirements of Art. 1006.10 of the Standard Specs.

Class SI Concrete shall be used throughout.

The Precast Concrete Box Culvert Sections shall conform to the requirements of AASHTO M273.

All dimensions are in FEET (')-INCHES (") unless otherwise noted.

Concrete and Rebar quantities and lengths calculated for the cast-in-place End Sections will vary based on the precast box culverts supplied.

End Sections will be paid for at the contract unit price per each for BOX CULVERT END SECTION, as outlined in Art. 540.08, which prices shall include all concrete, rebar, and all other items necessary to complete the proposed work.

Drain holes shall be provided in accordance with Art. 503.11 of the Standard Specs.

Drawings not to scale. Some dimensions may vary due to actual box culvert dimensions.

BILL OF MATERIAL (ONE END SECTION)

Bar	No.	Size	Length	Shape
b	2	#4	6'-10"	
b1	1	#4	10'-3"	
b2	1	#4	13'-7"	
d	12	#4	4'-6"	
h	1	#4	17'-8"	
h1	2	#4	5'-5"	
h2	2	#4	5'-5"	
s	2	#4	20'-4"	
v	2	#4	5'-5"	
v1	2	#4	5'-2"	
v2	2	#4	4'-11"	
v3	2	#4	4'-9"	
v4	2	#4	4'-6"	
Concrete/End Section			Cu. Yd.	2.5
Reinforcement Bars			Pound	148.0

Item	Unit	Qty.
Box Culvert End Section Culvert No. 3	Each	2.0

SHEET 6 OF 6

DRAWING NOT TO SCALE

ILLINOIS DEPARTMENT OF TRANSPORTATION

DETAIL OF BOX CULVERT END SECTION (CAST IN PLACE)

FAP ROUTE 323 (US 36)
SECTION (149,150)RS-3
EDGAR COUNTY

SCALE: NOT TO SCALE — DRAWN BY: JMS
DATE: 06/12/2008 — CHECKED BY

PLOT DATE = 4/4/2009
FILE NAME = c:\pw_work\PWIDOT\SHERERJM\dms87384\70113Culvert2details.dgn
PLOT SCALE = 42.2532 ' / IN.
USER NAME = sherer-gm