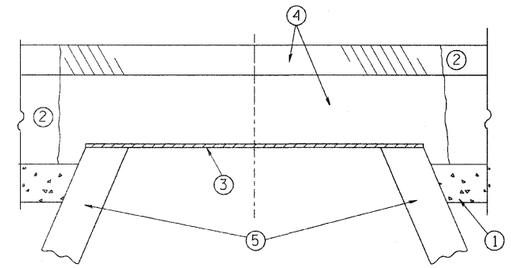

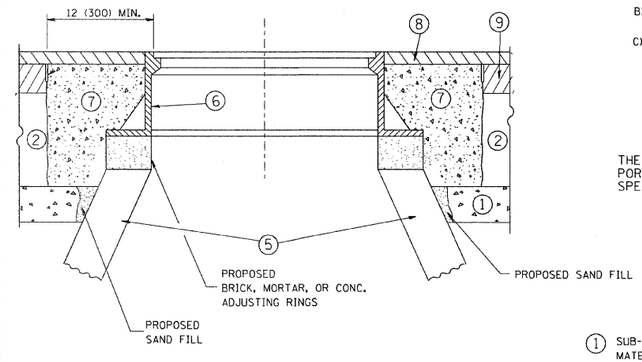

CONSTRUCTION PROCEDURES

STAGE 1 (BEFORE PAVEMENT MILLING)

A) REMOVE A MINIMUM OF 12 (300) OF THE PAVEMENT FROM AROUND THE STRUCTURE.

B) REMOVE THE EXISTING FRAME AND LID FROM THE STRUCTURE.

C) COVER THE STRUCTURE OPENING WITH A 36 (900) DIAMETER METAL PLATE.

D) BACKFILL WITH CRUSHED STONE AND A MINIMUM 1½ (40) THICK HMA SURFACE MIX APPROVED BY THE ENGINEER.

STAGE 2 (AFTER PAVEMENT MILLING)

A) REMOVE THE HMA SURFACE MIX AND CRUSHED STONE.

B) INSTALL THE FRAME AND LID; ADJUST THE FRAME TO ITS FINAL SURFACE ELEVATION.

C) THE SURROUNDING SPACE SHALL BE FILLED WITH CLASS SI CONCRETE, OR HMA SURFACE COURSE OR HMA BINDER COURSE TO THE ELEVATION OF THE SURFACE OF THE EXISTING BASE COURSE OR THE BINDER COURSE.

THE PROCEDURE EXPLAINED ABOVE SHALL CONFORM TO THE APPLICABLE PORTIONS OF SECTIONS 353, 406, 602, AND 603 OF THE STANDARD SPECIFICATIONS.

LEGEND

1. SUB-BASE GRANULAR MATERIAL
2. EXISTING PAVEMENT
3. 36 (900) DIAMETER METAL PLATE
4. PROPOSED CRUSHED STONE AND HMA SURFACE MIX
5. EXISTING STRUCTURE
6. FRAME AND LID (SEE NOTES)
7. CLASS SI CONCRETE, HMA SURFACE COURSE OR HMA BINDER COURSE
8. PROPOSED HMA SURFACE COURSE
9. PROPOSED HMA BINDER COURSE

NOTES:

EXISTING BROKEN FRAMES AND LIDS SHALL BE REMOVED AND DISPOSED OF BY THE CONTRACTOR AND SHALL BE REPLACED AS DIRECTED BY THE ENGINEER. REPLACEMENT FRAMES AND LIDS WILL BE PAID FOR IN ACCORDANCE WITH ARTICLE 109.04 OF THE STANDARD SPECIFICATIONS UNLESS A SEPARATE PAY ITEM HAS BEEN PROVIDED.

IF THE EXISTING LIDS ARE OPEN, THE FRAME WILL BE ADJUSTED TO THE ELEVATION OF THE MILLED PAVEMENT SURFACE PRIOR TO THE MILLING OPERATION. THE FRAME WILL NOT BE REMOVED AND COVERED BY THE METAL PLATE.

CITY OF CHICAGO CASTINGS ARE THE PROPERTY OF THE CITY AND THE CONTRACTOR SHALL NOTIFY THE CITY FOR REMOVAL AND DISPOSITION OF THE CASTINGS.

THE METAL PLATE USED TO COVER THE STRUCTURE SHALL REMAIN THE PROPERTY OF THE CONTRACTOR.

WHEN STRUCTURES ARE TO BE ADJUSTED OR RECONSTRUCTED, THE LOWERING AND RAISING OF THE FRAMES AND LIDS WILL NOT BE PAID FOR SEPARATELY BUT WILL BE INCLUDED IN THE COST OF THE CORRESPONDING PAY ITEM.

LOCATION OF STRUCTURES:

THE CONTRACTOR WILL BE REQUIRED TO KEEP A RECORD OF THE LOCATIONS OF THE BURIED STRUCTURES ACCORDING TO THE STATION AND DISTANCE LEFT OR RIGHT OF THE CENTERLINE OF PAVEMENT. UPON COMPLETION OF THE WORK, THE CONTRACTOR WILL DELIVER THE RECORD TO THE ENGINEER.

BASIS OF PAYMENT: THIS WORK WILL BE PAID FOR AT THE CONTRACT UNIT PRICE PER EACH FOR "FRAMES AND LIDS TO BE ADJUSTED, SPECIAL"

NEW FRAMES AND LIDS, WHEN SPECIFIED, WILL BE PAID FOR SEPARATELY.

DETAILS FOR FRAMES AND LIDS ADJUSTMENT WITH MILLING

ALL DIMENSIONS ARE IN INCHES (MILLIMETERS) UNLESS OTHERWISE SHOWN

FILE NAME = W:\diststd\22x34\bd08.dgn	USER NAME = gaglianobt	DESIGNED - R. SHAH	REVISED - R. SHAH 03-10-95	STATE OF ILLINOIS DEPARTMENT OF TRANSPORTATION	DETAILS FOR FRAMES AND LIDS ADJUSTMENT WITH MILLING			F.A.P. RTE.	SECTION	COUNTY	TOTAL SHEETS / SHEET NO.
		DRAWN -	REVISED - A. ABBAS 03-21-97					352	113 R (2&4) RS	LAKE	24 / 14
	PLOT SCALE = 50.0000 ' / IN.	CHECKED -	REVISED - R. WIEDEMAN 05-14-04					BD600-03 (BD-8)		CONTRACT NO. 60F43	
	PLOT DATE = 1/4/2008	DATE - 10-25-94	REVISED - R. BORO 01-01-07		SCALE: NONE	SHEET NO. 1 OF 1 SHEETS	STA. TO STA.	FED. ROAD DIST. NO. 1	ILLINOIS	FED. AID PROJECT	