CONTRACT NO. 70022

F.A.I. RTE.	SECTION	COUNTY	TOTAL SHEETS	SHEET NO.
72	*	PIATT	251	196

* (58,74-66)&(74-67&68)RS-1

SN 074-0062 CRASHWALL EXTENSION

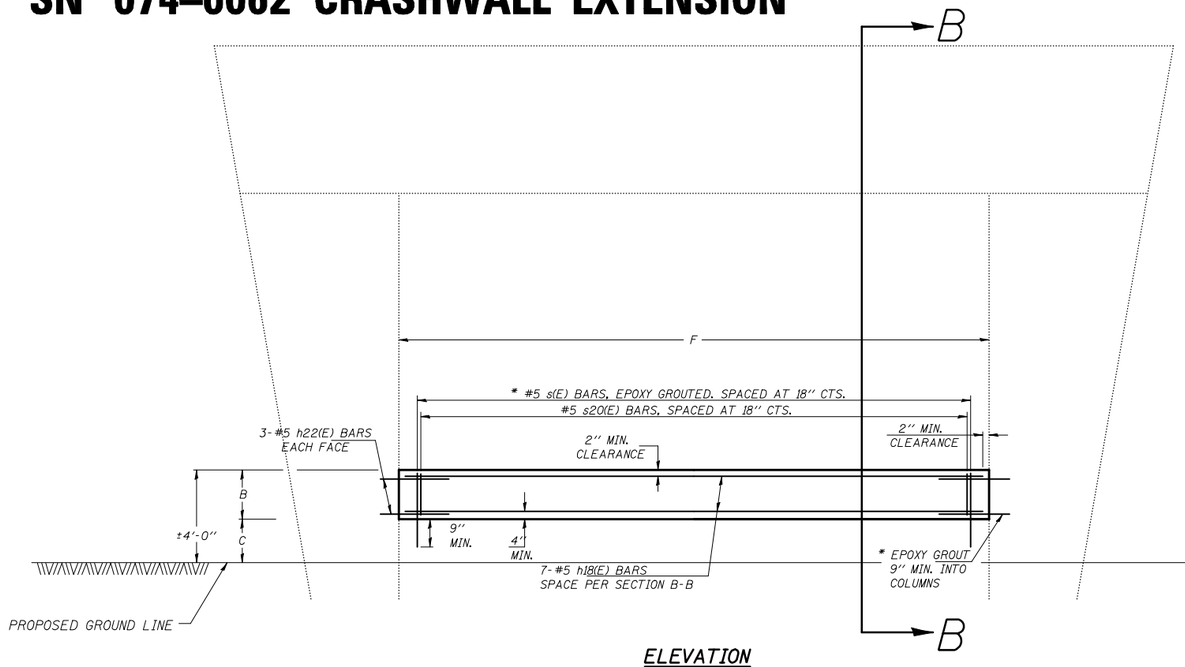

ELEVATION

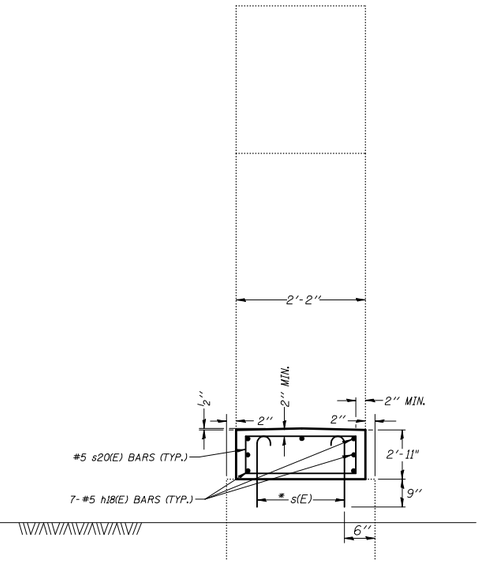

SECTION B-B

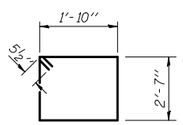

BAR s20(E)

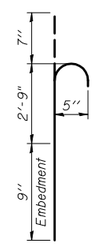

BAR s(E)

GENERAL NOTES

PLAN DIMENSIONS AND DETAILS RELATIVE TO EXISTING PLANS ARE SUBJECT TO ROUTINE VARIATIONS. THE CONTRACTOR SHALL FIELD VERIFY EXISTING DIMENSIONS AND DETAILS AFFECTING NEW CONSTRUCTION AND MAKE NECESSARY APPROVED ADJUSTMENTS PRIOR TO CONSTRUCTION OR ORDERING OF MATERIALS. SUCH VARIATIONS SHALL NOT BE CAUSE FOR ADDITIONAL COMPENSATION FOR A CHANGE IN SCOPE OF THE WORK. HOWEVER, THE CONTRACTOR WILL BE PAID FOR THE QUANTITY ACTUALLY FURNISHED BASED UPON THE UNIT PRICE BID FOR THE WORK.

THIS WORK WILL BE PAID FOR AT THE CONTRACT UNIT PRICE PER CUBIC YARD FOR CONCRETE STRUCTURES.

THE COST OF EPOXY GROUTING THREADED RODS SHALL BE INCLUDED WITH REINFORCEMENT BARS (EPOXY COATED).

REINFORCEMENT BARS SHALL CONFORM TO THE REQUIREMENTS OF ASTM A706 OR 60(IL MODIFIED).

REINFORCEMENT BARS DESIGNATED (E) SHALL BE EPOXY COATED.

* EPOXY GROUT BARS IN 9" MIN. HOLES ACCORDING TO ARTICLE 584 OF THE STANDARD SPECIFICATIONS.

CRASHWALL EXTENSION QUANTITIES

STRUCTURE STATION	DIMENSION B (FT)	DIMENSION C (FT)	DIMENSION F (FT)	CONCRETE STRUCTURES (CU YD)
SN 074-0062 1256+11.76	2'-11"	1'-1"	12'-3"	2.9
			CONCRETE STRUCTURES =	2.9

BAR	QTY	SIZE	LENGTH	LBS
h18(E)	7	#5	11'-11"	86.8
			LBS =	86.8

BAR	QTY	SIZE	LENGTH	LBS
h22(E)	12	#5	2'-9"	34.3
			LBS =	34.3

STRUCTURE	BAR	QTY	SIZE	LENGTH	SHAPE	LBS
074-0062	s(E)	20	#5	4'-1"		84.9
					LBS =	84.9

BAR	QTY	SIZE	LENGTH	SHAPE	LBS
s20(E)	10	#5	9'-9"		101.4
				LBS =	101.4
				REINFORCEMENT BARS (EPOXY COATED) =	307.4

SN 074-0062

ILLINOIS DEPARTMENT OF TRANSPORTATION
Crashwall Extensions
F.A.I. ROUTE 72
SECTION (58,74-66)&(74-67&68)RS-1
PIATT COUNTY
Sheet 4 of 7
SCALE: NONE
DRAWN BY:
DATE: 12/15/09
CHECKED BY: R.T.B.

PLOT DATE = 2/8/2010
FILE NAME = o:\hw_work\PWIDOT\PIERSONBR\d0100678\289%details.dgn
PLOT SCALE = 1000.0024 / IN.
USER NAME = pierwonbr