CONTRACT NO. 70022

F.A.I. RTE.	SECTION	COUNTY	TOTAL SHEETS	SHEET NO.
72	*	PIATT	251	176

* (58,74-66)&(74-67&68)RS-1

DETAILS FOR I-72 MAINLINE MILLING AND RESURFACING TRANSITIONS

MILLING TRANSITION AT BEGINNING OF PROJECT

STATION 910+00.00 TO STATION 910+52.50 EB & WB

NOTE:
AREA OF MILLING TRANSITION SHALL BE INCLUDED IN CONTRACT UNIT PRICE FOR THE HOT-MIX ASPHALT SURFACE REMOVAL - 3¼". NO ADDITIONAL COMPENSATION SHALL BE ALLOWED.

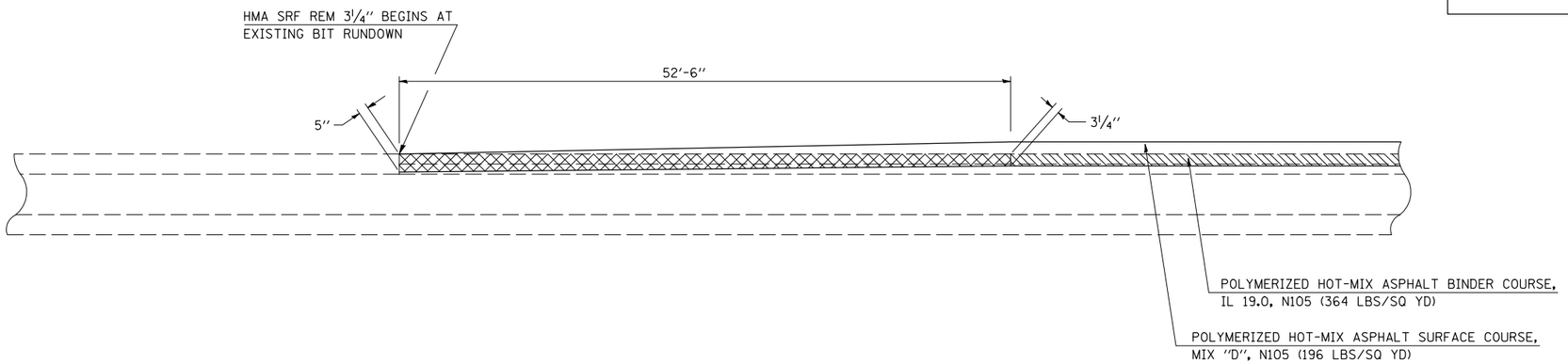

HOT-MIX ASPHALT SURFACE REMOVAL - 3¼"

MILLING TRANSITION
HOT-MIX ASPHALT SURFACE REMOVAL
FROM 5" TO 3¼"

NOT TO SCALE

DETAIL FOR HOT-MIX ASPHALT SURFACE REMOVAL-BUTT JOINT AT MAINLINE SHOULDERS

STATION 910+00.00 TO STATION 910+52.50 EB & WB

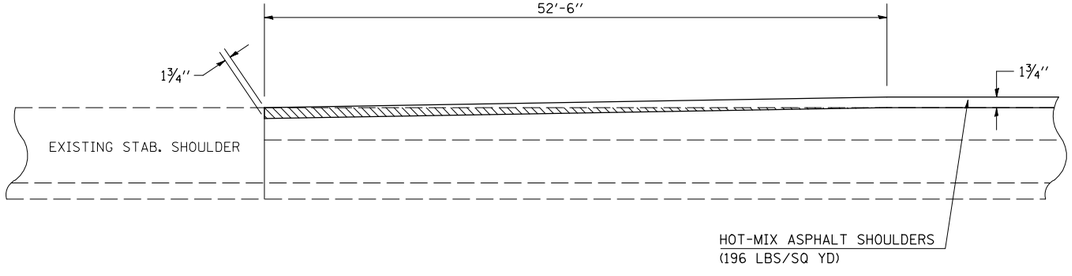

HOT-MIX ASPHALT SURFACE REMOVAL - BUTT JOINT AT MAINLINE SHOULDERS

NOT TO SCALE

ILLINOIS DEPARTMENT OF TRANSPORTATION
DETAILS FOR I-72 MAINLINE
MILLING AND RESURFACING TRANSITIONS
F.A.I. ROUTE 72
SECTION (58,74-66)&(74-67&68)RS-1
PIATT COUNTY
Sheet 1 of 4

SCALE: NONE
DATE: 12/15/09
DRAWN BY: CADD
CHECKED BY: R.T.B.

PLOT DATE = 2/8/2010
FILE NAME = c:\pw_work\pwidot\psersonbr\d81096718\28594details.dgn
PLOT SCALE = 100.0000 ' / IN.
USER NAME = psersonbr