DRAIN REPAIR DETAILS
S.N. 074–0062

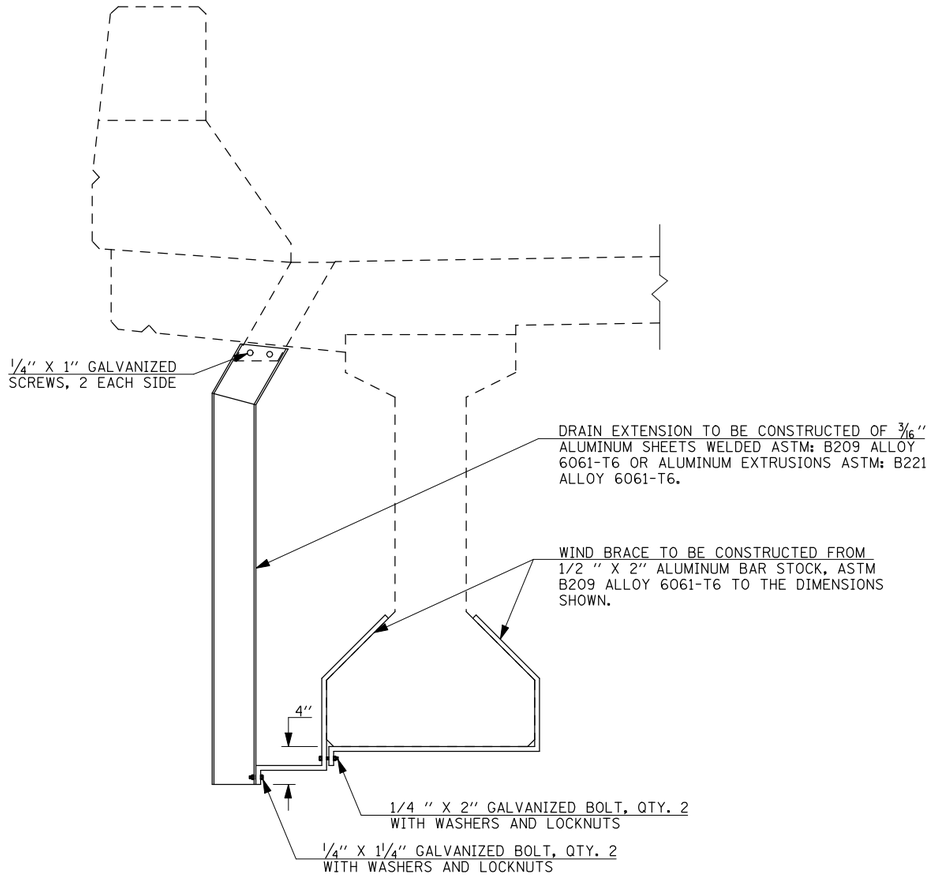

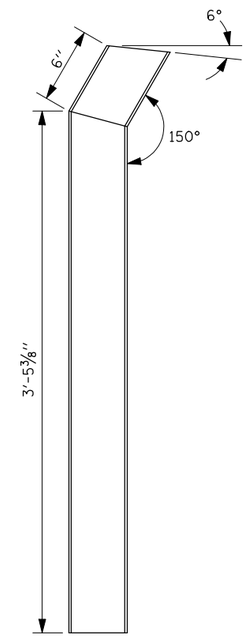

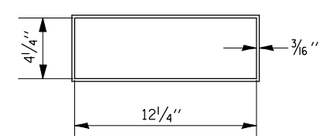

(INSIDE DIMENSIONS ARE SHOWN)

EXTENSION DETAILS

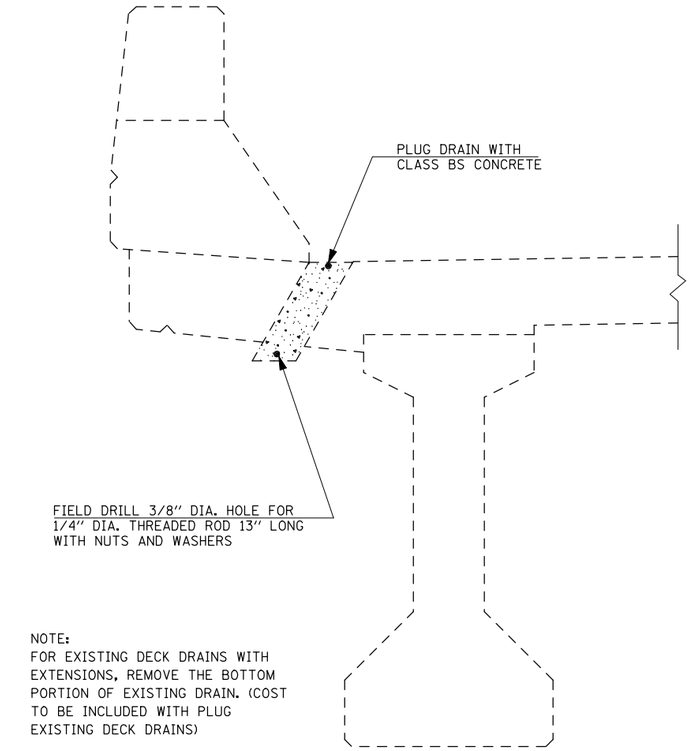

NOTE:
FOR EXISTING DECK DRAINS WITH EXTENSIONS, REMOVE THE BOTTOM PORTION OF EXISTING DRAIN. (COST TO BE INCLUDED WITH PLUG EXISTING DECK DRAINS)

DETAIL FOR PLUG EXISTING DECK DRAINS

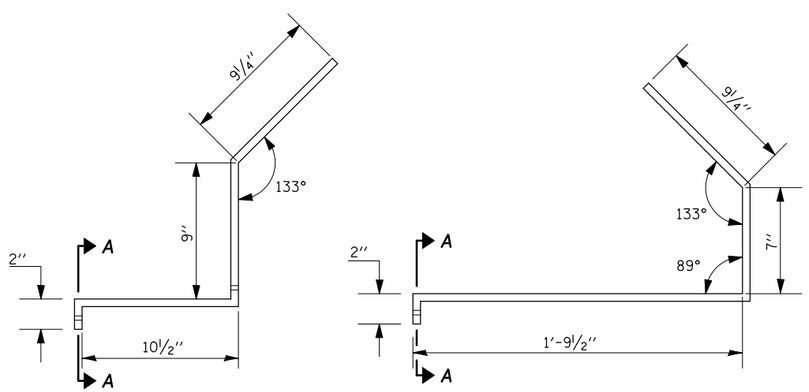

WIND BRACE DETAILS

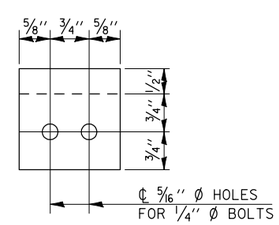

SECTION A-A

NOTE:

EXISTING DRAINS HAVE BEEN EXTENDED. HOWEVER, EXISTING EXTENSIONS ARE NOT OF SUFFICENT LENGTH. THE EXISTING EXTENSIONS SHALL BE REMOVED PRIOR TO THE PLACEMENT OF THE PROPOSED. (COST TO BE INCLUDED WITH FLOOR DRAIN EXTENSION OR PLUG EXISTING DECK DRAIN)

BILL OF MATERIALS

ITEM	UNIT	TOTAL
FLOOR DRAIN EXTENSION	EACH	8.0
PLUG EXISTING DECK DRAINS	EACH	8.0

FILE NAME = c:\pw_work\pwidot\piersonbr\d0109687\70022-Bridge Repair Plan.dgn	USER NAME = piersonbr	DESIGNED - GMS	REVISED -
		DRAWN - GMS	REVISED -
	PLOT SCALE = 40.0000 ' / IN.	CHECKED -	REVISED -
	PLOT DATE = 2/8/2010	DATE -	REVISED -

STATE OF ILLINOIS
DEPARTMENT OF TRANSPORTATION

DRAIN REPAIR DETAILS
S.N. 074–0062

SCALE: | SHEET NO. 4 OF 6 SHEETS | STA. | TO STA.

F.A.I. RTE.	SECTION	COUNTY	TOTAL SHEETS	SHEET NO.
72	(58,74-66)&(74-67&68)RS-1	PIATT	251	160

CONTRACT NO. 70022

ILLINOIS FED. AID PROJECT