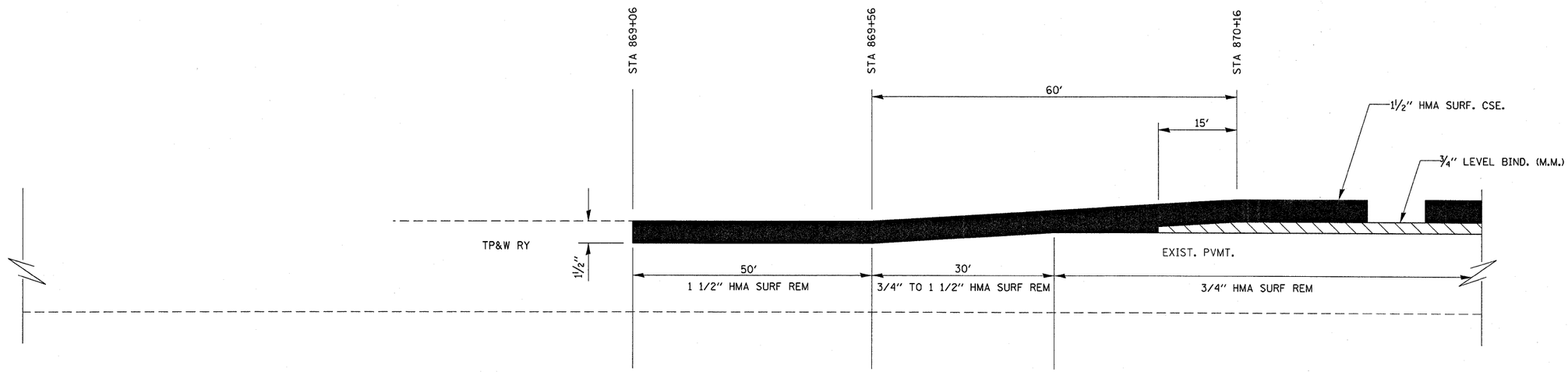

TAPER DETAIL AT RAILWAY

NOTE: HMA SURFACE REMOVAL TRANSITION AND HMA SURFACE REMOVAL, 1 1/12" WILL BE PAID FOR AS HMA SURFACE REMOVAL 3/4"

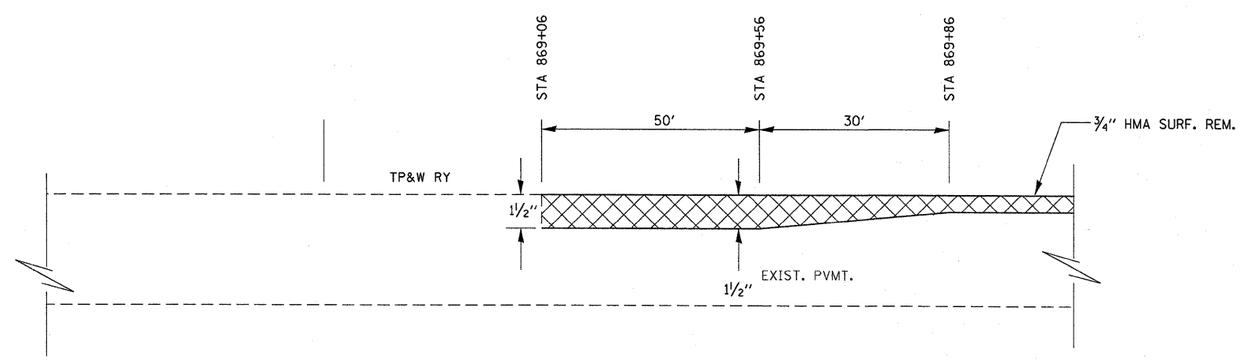

HMA SURFACE REMOVAL TRANSITION AT RAILWAY

FILE NAME = c:\pw_work\PWIDOT\CARPENTERDJ\d0175591\d366643-sht-details.DGN	USER NAME = carpenterdj	DESIGNED - ___	REVISED - ___	STATE OF ILLINOIS DEPARTMENT OF TRANSPORTATION	RESURFACING DETAIL AT TP & W RAILWAY	F.A.P. RTE.	SECTION	COUNTY	TOTAL SHEETS	SHEET NO.
		DRAWN - ___	REVISED - ___			332	(3, D-1)RS-2, (14, 15, 2)RS	IROQUOIS	15	13
	PLOT SCALE = 50.0000 ' / IN.	CHECKED - ___	REVISED - ___			CONTRACT NO. 66643				
	PLOT DATE = Jan 25, 2010 - 07:13:35 AM	DATE - _____	REVISED - ___		SCALE: _____ SHEET NO. __ OF ___ SHEETS STA. _____ TO STA. _____	ILLINOIS FED. AID PROJECT				