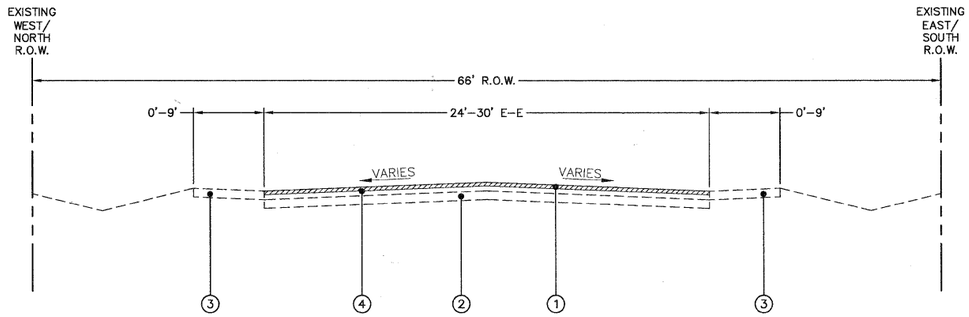

EXISTING TYPICAL SECTION
INDUSTRIAL DRIVE
STA. 300+00 TO STA. 302+00

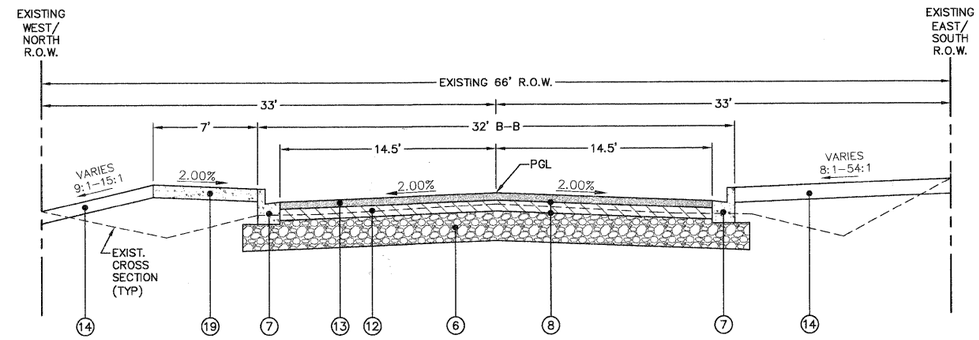

PROPOSED TYPICAL SECTION
INDUSTRIAL DRIVE
STA. 300+00 TO STA. 302+00

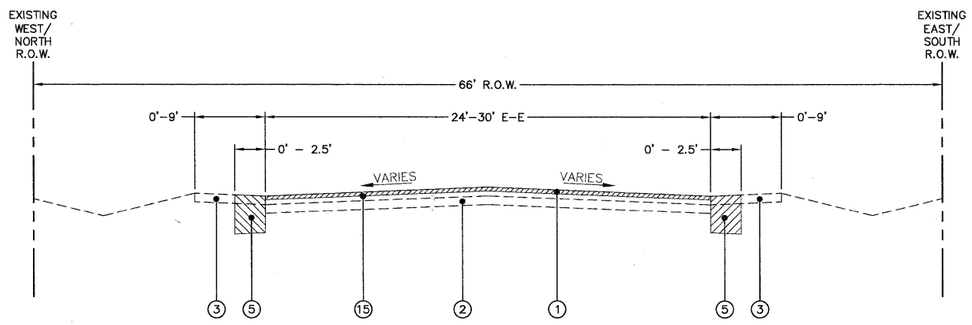

EXISTING TYPICAL SECTION
INDUSTRIAL DRIVE
STA. 302+00 TO STA. 325+73

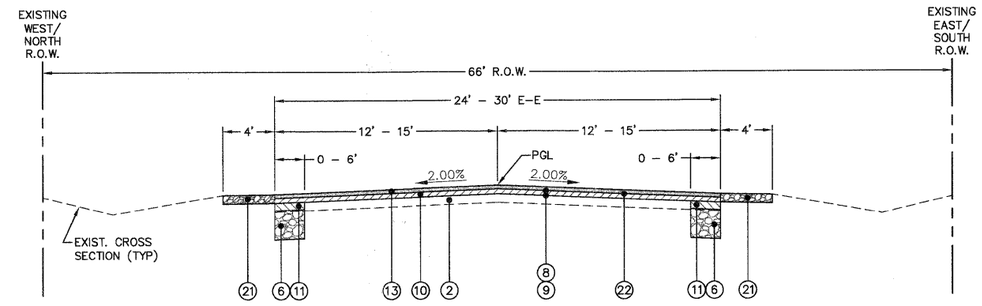

PROPOSED TYPICAL SECTION
INDUSTRIAL DRIVE
STA. 302+00 TO STA. 325+73

LEGEND

1. EXISTING ASPHALT PAVEMENT
2. EXISTING SUB-BASE GRANULAR MATERIAL
3. EXISTING AGGREGATE SHOULDER/SURFACE
4. PAVEMENT REMOVAL
5. EARTH EXCAVATION
6. AGGREGATE SUBGRADE, 12"
7. COMBINATION CONCRETE CURB AND GUTTER, TYPE B-6.12
8. BITUMINOUS MATERIALS (PRIME COAT)
9. AGGREGATE (PRIME COAT)
10. LEVELING BINDER, (MACHINE METHOD), N50, 1"
11. HOT-MIX ASPHALT BINDER COURSE, IL-19.0, N50, 2 1/2"
12. HOT-MIX ASPHALT BINDER COURSE, IL-14.0, N50, 4 1/2" (2 LIFTS)
13. HOT-MIX ASPHALT SURFACE COURSE, MIX "C", N50, 2"
14. TOPSOIL, SEEDING, FERTILIZER AND MULCH PER PLANS
15. HOT-MIX ASPHALT SURFACE REMOVAL, 2"
16. POROUS GRANULAR EMBANKMENT, AS NEEDED
17. GEOTECHNICAL FABRIC FOR GROUND STABILIZATION, AS NEEDED
18. 5' PORTLAND CEMENT CONCRETE SIDEWALK, 5" THICK ON 4" AGGREGATE BASE, TYPE B (7" THICK @ DRIVEWAYS W/ 6" BASE)
19. 7' PORTLAND CEMENT CONCRETE SIDEWALK, 5" THICK ON 4" AGGREGATE BASE, TYPE B (7" THICK @ DRIVEWAYS W/ 6" BASE)
20. EXISTING SIDEWALK
21. AGGREGATE SHOULDERS, TYPE B, 6"
22. AREA REFLECTIVE CRACK CONTROL
23. HOT-MIX ASPHALT SURFACE REMOVAL, VARIABLE DEPTH

EXISTING THICKNESS TABLE

ROADWAY	AVERAGE EXISTING HOT-MIX ASPHALT THICKNESS (INCHES)	AVERAGE EXISTING AGGREGATE BASE COURSE THICKNESS (INCHES)
INDUSTRIAL DRIVE	4.60	4.40

COPYRIGHT © 2010 ENGINEERING ENTERPRISES, INC.

FILE NAME	USER NAME = @USER@	DESIGNED - JAM, SWM	REVISED - 12/02/09
@FILEL@		DRAWN - KKP	REVISED - 01/22/10
	PLOT SCALE = @SCALE@	CHECKED - JAM	REVISED - 02/03/10
	PLOT DATE = @DATE@	DATE - 10/16/09	REVISED - --- ----------

STATE OF ILLINOIS
DEPARTMENT OF TRANSPORTATION

INDUSTRIAL DRIVE - TYPICAL CROSS SECTION

SCALE: N/A | PROJECT NO. HPP-1468(004) | JOB NO. C-91-175-06
SHEET NO. 8 OF 92 SHEETS | STA. N/A TO STA. N/A

F.A. RTE.	SECTION	COUNTY	TOTAL SHEETS	SHEET NO.
N/A	06-00015-00-PV	KANE	97	11

CONTRACT NO. 63406
FED. ROAD DIST. NO. _ | ILLINOIS | FED. AID PROJECT

Plotted: February 1, 2010 @ 2:06 PM By: Kris Pung - Tab: 11-SECTN (22x34)

Path: R:\SDSKPROJ\HA0567\DWG\HA0828\DWG FINAL ENG\HA0567-CVR