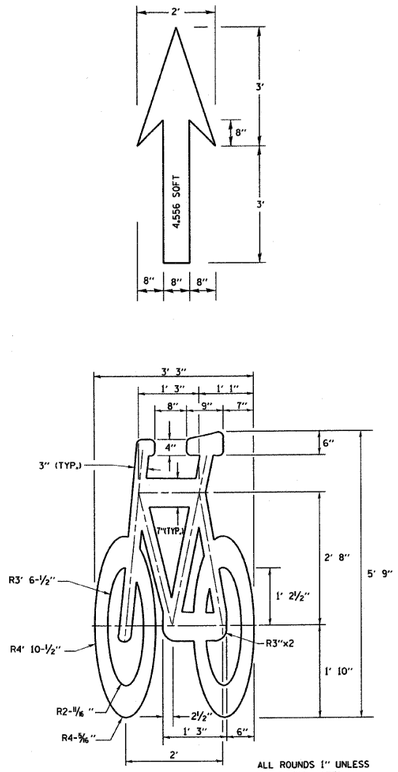

ALL ROUNDS 1" UNLESS OTHERWISE NOTED.

BICYCLE LANE SYMBOL

NOTE:

1.) FOR BIKE LANE SYMBOLS ONLY, USE PRE-FORMED THERMOPLASTIC WITH A MINIMUM THICKNESS OF 90 MILS, MINIMUM SKID RESISTANCE VALUE OF 60 BPN, & A MINIMUM INDEX OF REFRACTION OF 1.50.

2.) THE RESIDENT ENGINEER SHALL CONTACT MR. BEN GOMBERG AT 312-744-8093 AT LEAST ONE CALENDAR WEEK PRIOR TO INSTALLING BIKE LANE SYMBOLS.

TYPICAL BIKE LANE SYMBOLS

DRAWING #28

DRAWING #29

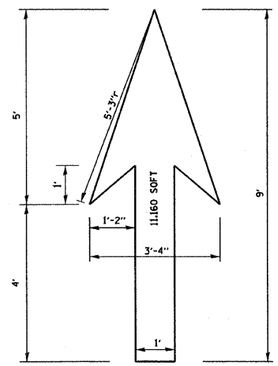

DRAWING #30

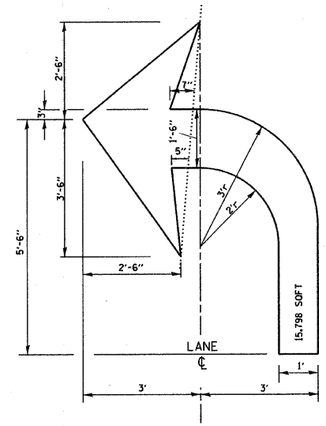

DRAWING #31

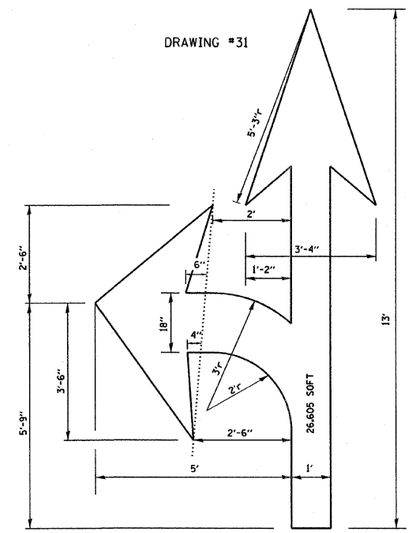

DRAWING #32

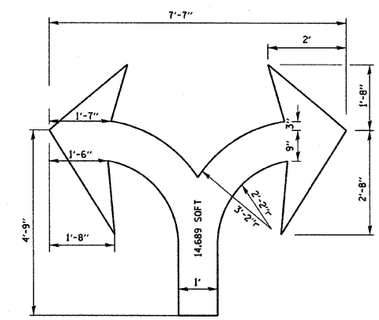

DRAWING #33

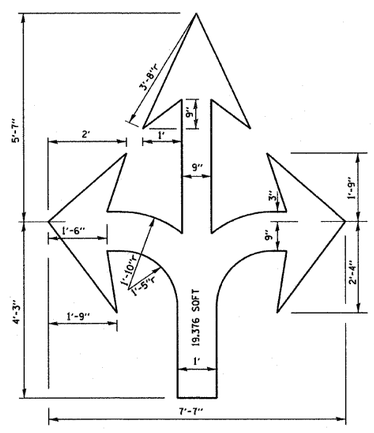

DRAWING #34

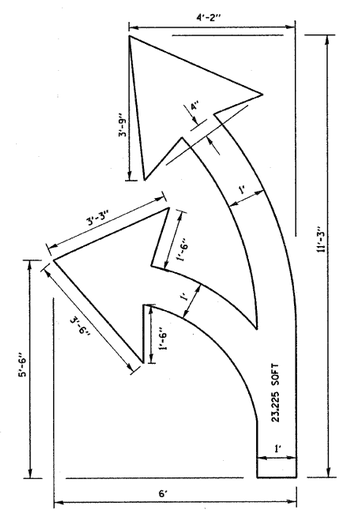

DRAWING #35

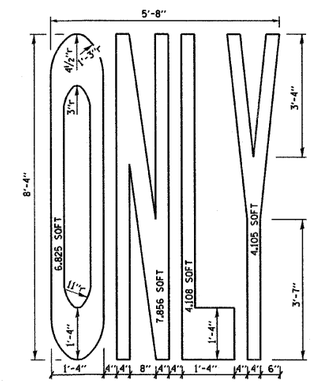

NOTE:

ALL MARKINGS SHALL BE SOLID WHITE UNLESS OTHERWISE NOTED IN THE PLANS

FILE NAME = W:\diststd\22x34\tc24.dgn	USER NAME = gaglienobt	DESIGNED -	REVISED -T. RAMMACHER 12-07-00	STATE OF ILLINOIS DEPARTMENT OF TRANSPORTATION	CITY OF CHICAGO TYPICAL PAVEMENT MARKINGS			F.A.U. RTE.	SECTION	COUNTY	TOTAL SHEETS / SHEET NO.
		DRAWN -	REVISED -					2729	1617-I-1	COOK	13 / 13
	PLOT SCALE = 50.000 ' / IN.	CHECKED -	REVISED -						TC-24	CONTRACT NO. 60J69	
	PLOT DATE = 1/4/2008	DATE -	REVISED -		SCALE: NONE	SHEET NO. 2 OF 2 SHEETS	STA. TO STA.	FED. ROAD DIST. NO. 1	ILLINOIS	FED. AID PROJECT	