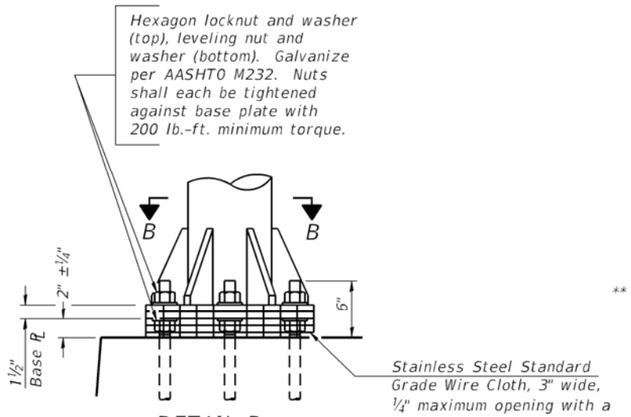

DETAIL B

Ribs shall be cut to t slope of pipe.

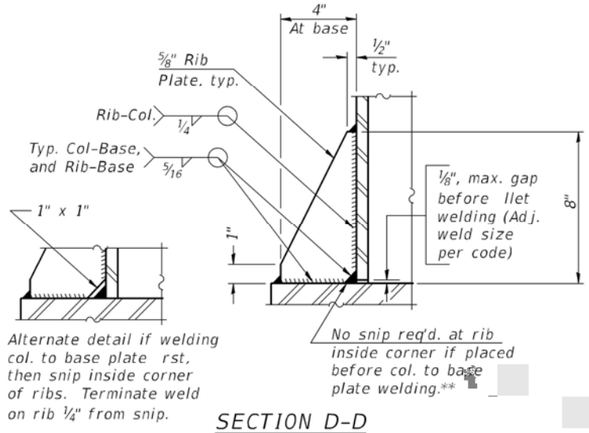

SECTION D-D

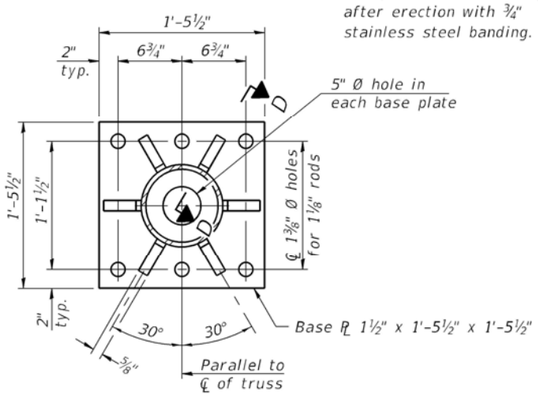

SECTION B-B

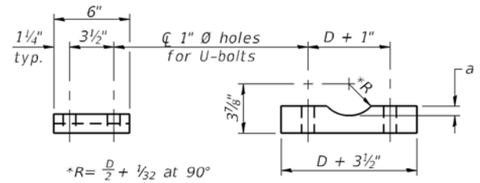

*R= $\frac{D}{2}$ + 1/32 at 90°

D = Outside Diameter of Chord.

SADDLE SHIM DETAIL

ASTM B26 Alloy 356-F
or
ASTM B209 Alloy 6061-T651
(4 required per sign truss)

Truss Chord Nominal Dia.	a
5"	¾"
5½"	13/16"
6"	⅞"
6½"	15/16"

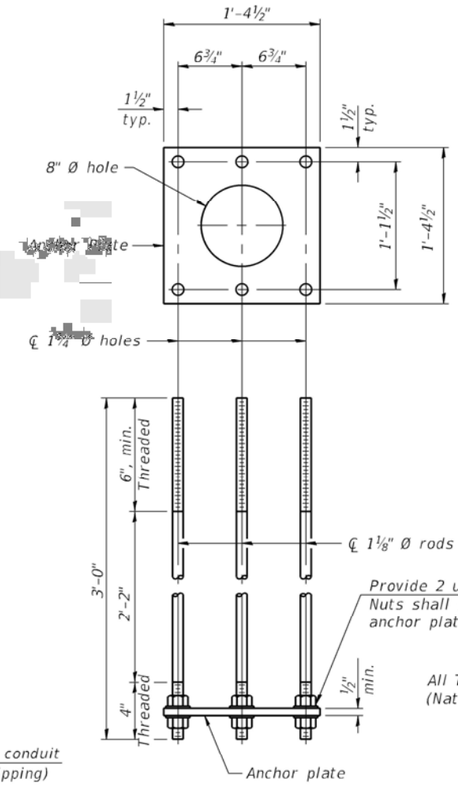

ANCHOR ROD DETAIL

Spread Footing Foundation

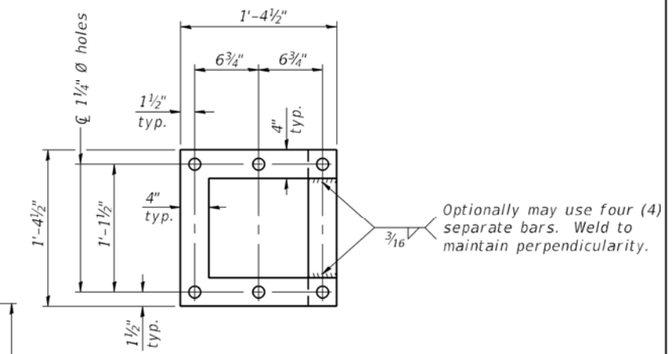

POSITIONING PLATE(S)

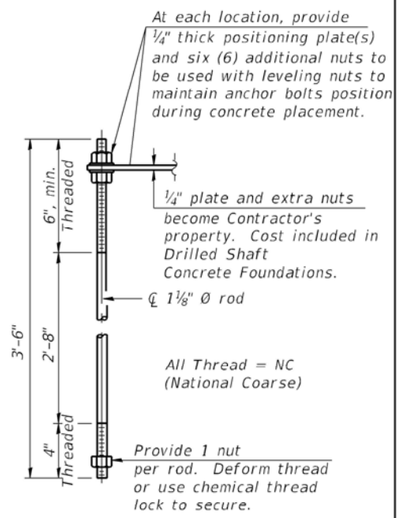

ANCHOR ROD DETAIL

Drilled Shaft Foundation

Anchor rods shall conform to ASTM F1554 Grade 105. Galvanize upper 12" minimum per AASHTO M232. No welding shall be permitted on rods.

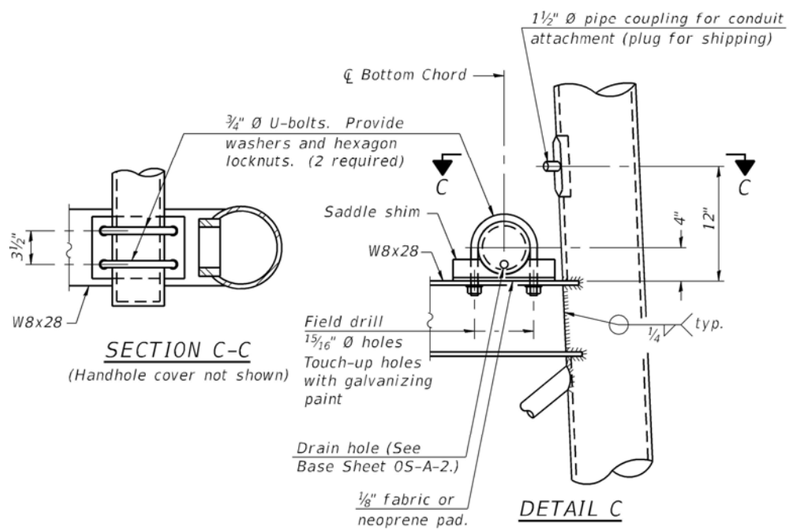

SECTION C-C

(Handhole cover not shown)

DETAIL C

TYPE I-A TRUSS

8" Ø PIPE SUPPORT FRAME DETAILS

OS-A-4A 2-17-2017

MODEL: PNP-174
FILE NAME: ...10570C01-sht-SGN_OHDET_006_OS-A-4A.dgn

Kaskaskia Engineering Group, LLC

USER NAME = Matt Overbey	DESIGNED - MLC	REVISED -	STATE OF ILLINOIS DEPARTMENT OF TRANSPORTATION
	DRAWN - RJO	REVISED -	
PLOT SCALE = 2.0000 ' / in.	CHECKED - JW	REVISED -	
PLOT DATE = 1/25/2022 - 8:59:01 PM	DATE - JANUARY 2022	REVISED -	

OVERHEAD SIGN STRUCTURES
SUPPORT FRAME DETAILS – ALUMINUM TRUSS

SCALE: N.T.S. | SHEET 6 OF 20 SHEETS | STA. TO STA.

F.A.I. RTE.	SECTION	COUNTY	TOTAL SHEETS	SHEET NO.
57	10-(33,34,5,14)R & (10-34)B	CHAMPAIGN	1182	801

CONTRACT NO. 70C01

ILLINOIS FED. AID PROJECT

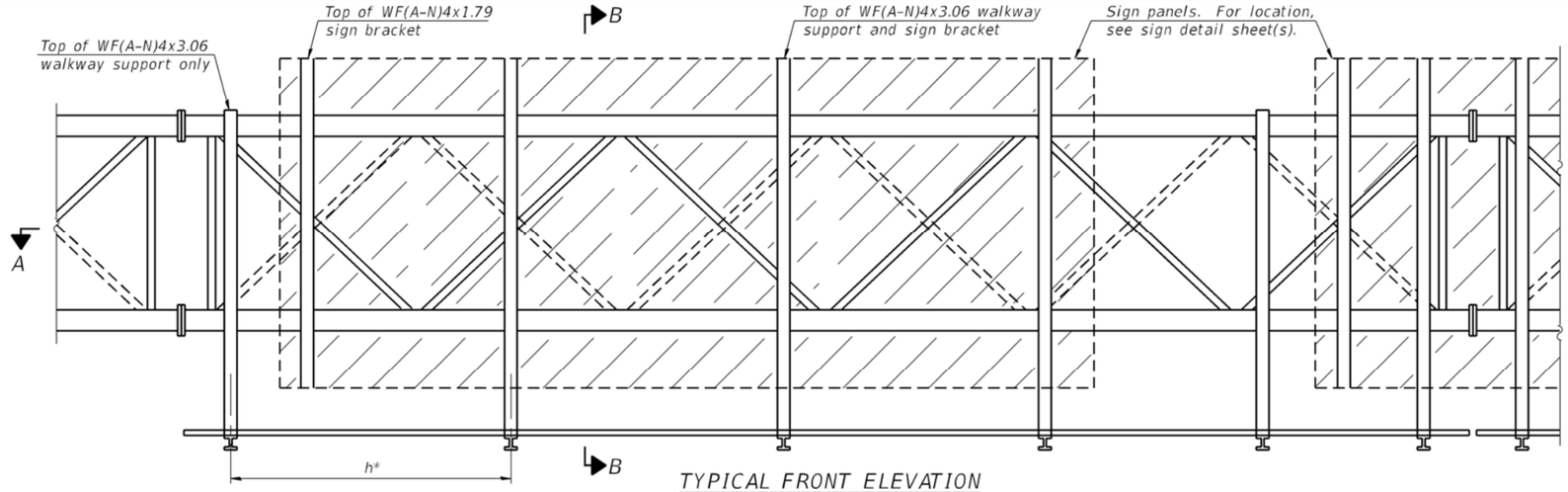

TYPICAL FRONT ELEVATION

With lights and handrail omitted for clarity.
For Section B-B, see Base Sheet OS-A-10.

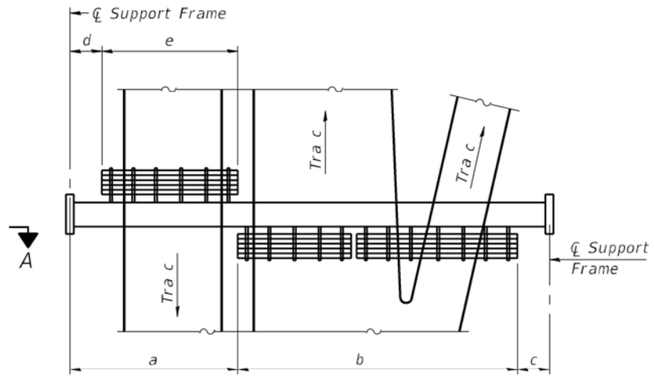

PLAN
WALKWAY AND HANDRAIL SKETCH

(Road plan beneath truss varies)

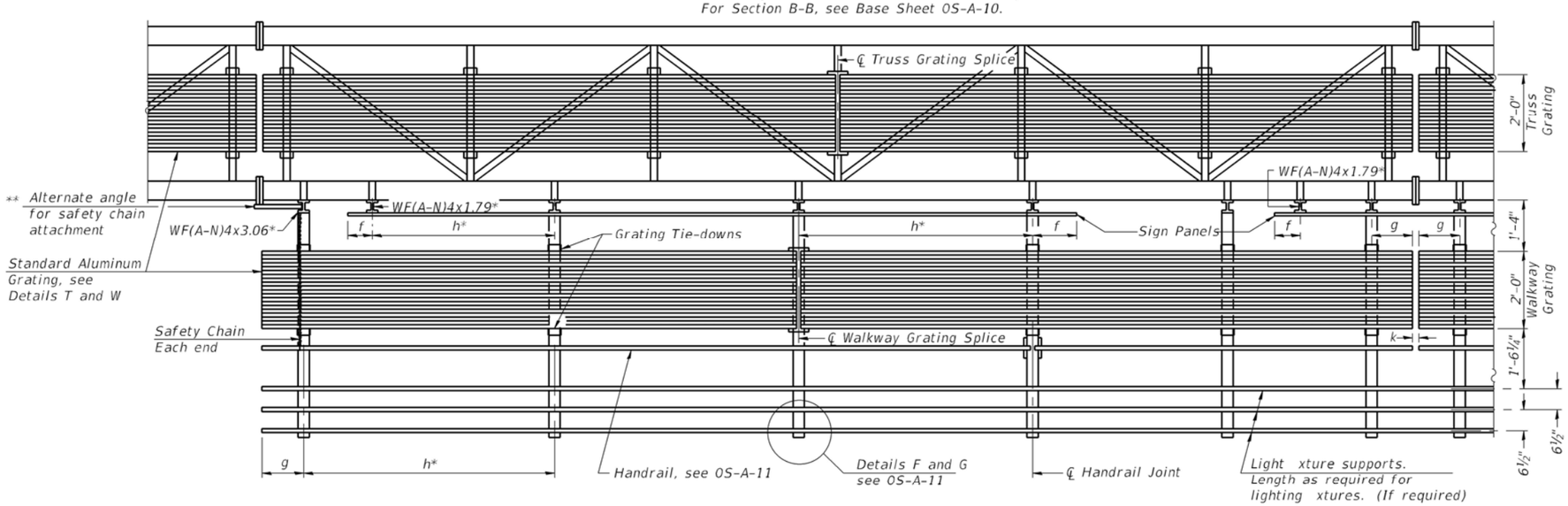

SECTION A-A

Handrail and walkway shall span a minimum of three brackets between splices and/or gap joints.
Place all sign and walkway brackets as close to panel points as practical.
Handrail joints, grating, and light support splices placed as needed.

BRACKET TABLE

WF(A-N)4x1.79 or WF(A-N)4x3.06 ASTM B308, Alloy 6061-T6		
Sign Width		Number Brackets Required
Greater Than	Less Than or Equal To	
	8'-0"	2
8'-0"	14'-0"	3
14'-0"	20'-0"	4
20'-0"	26'-0"	5
26'-0"	32'-0"	6

Notes:

* Space walkway brackets WF(A-N)4x3.06 and sign brackets WF(A-N)4x1.79 for e ciency and within limits shown:

f = 12" maximum, 4" minimum (End of sign to ℄ of nearest bracket)
g = 12" maximum, 4" minimum (End of walkway grating to ℄ of nearest support bracket)
h = 6'-0" maximum (℄ to ℄ sign and/or walkway support brackets, WF(A-N)4x1.79 or WF(A-N)4x3.06)
k = 2" maximum gap between adjacent walkway grating sections and handrail ends

** If walkway bracket at safety chain location is behind sign, add angle to bracket, see Alternate Safety Chain Attachment on Base Sheet OS-A-11.

For Details T and W, Section B-B and Grating Splice Details see Base Sheet OS-A-10.
For Handrail Details see Base Sheet OS-A-11.

Structure Number	Station	a	b	c	d	e	Walkway Grating and Handrail Lengths
5S0101074R180.3	1132+75	20'-0"	34'-5"	14'-0"	-	-	34'-5"

Truss grating to facilitate inspection shall run full length (center to center of support frames) ±12" on overhead trusses.
Cost of truss grating is included in "Overhead Sign Structure".

Walkway and Truss Grating width dimensions are nominal and may vary ±½" based on available standard widths.

OS-A-9 2-17-2017

MODEL: PNP-174
FILE NAME: ...\0570C01-sht-SGN_OHDET_007_OS-A-9.dgn

Kaskaskia Engineering Group, LLC

USER NAME = Matt Overbey	DESIGNED - MLC	REVISED -	STATE OF ILLINOIS DEPARTMENT OF TRANSPORTATION
	DRAWN - RJO	REVISED -	
PLOT SCALE = 2.0000 ' / in.	CHECKED - JW	REVISED -	
PLOT DATE = 1/25/2022 - 8:59:03 PM	DATE - JANUARY 2022	REVISED -	

OVERHEAD SIGN STRUCTURES
ALUMINUM WALKWAY DETAILS

SCALE: N.T.S. | SHEET 7 OF 20 SHEETS | STA. TO STA.

F.A.I. RTE.	SECTION	COUNTY	TOTAL SHEETS	SHEET NO.
57	10-(33,34,5,14)R & (10-34)B	CHAMPAIGN	1182	802
		CONTRACT NO. 70C01		
	ILLINOIS FED. AID PROJECT			

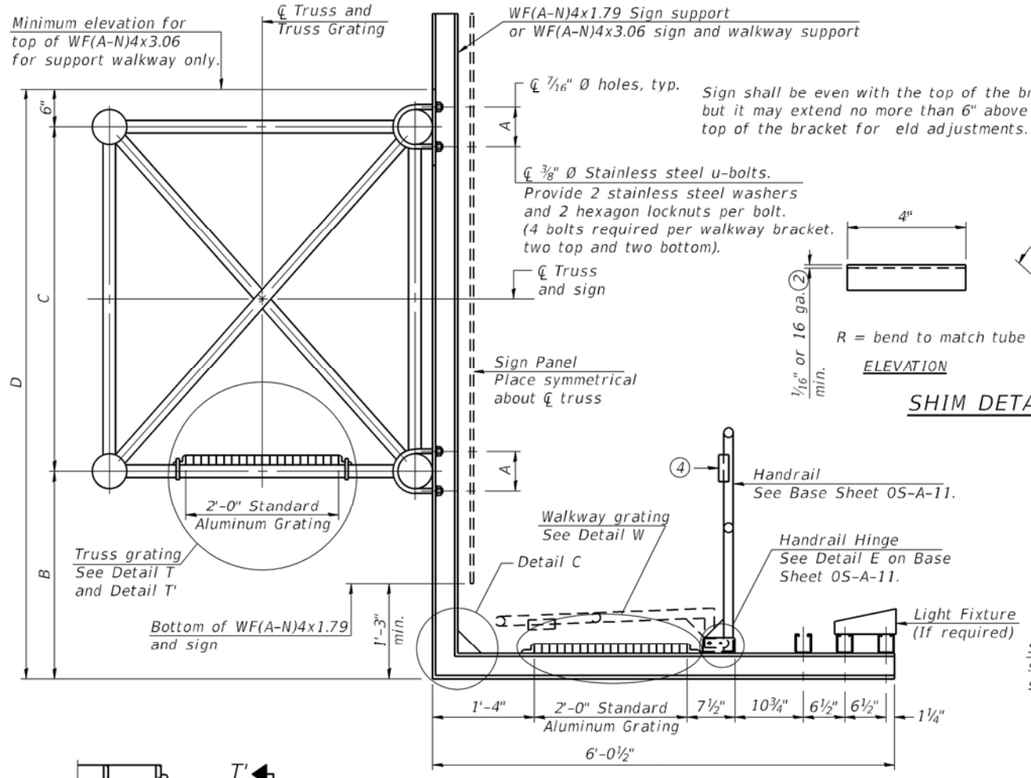

SECTION B-B

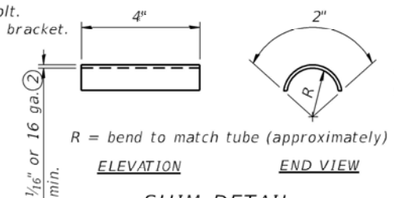

SHIM DETAIL

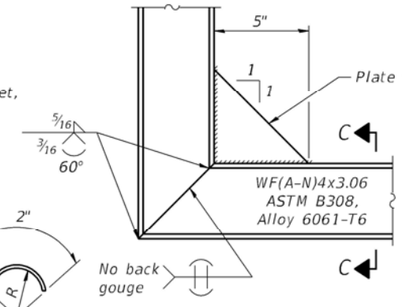

DETAIL C

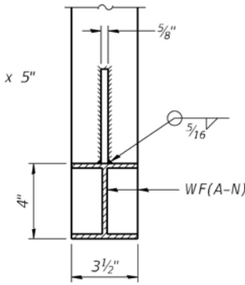

SECTION C-C

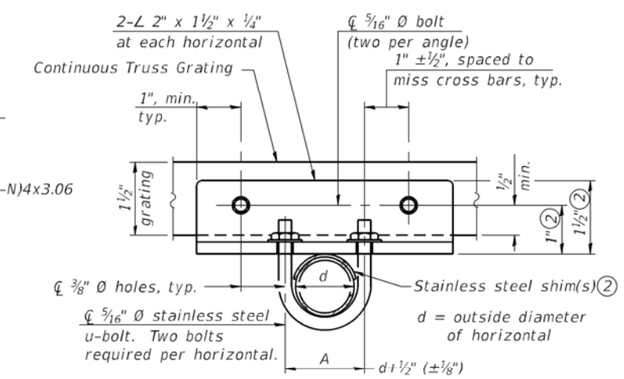

SECTION T-T

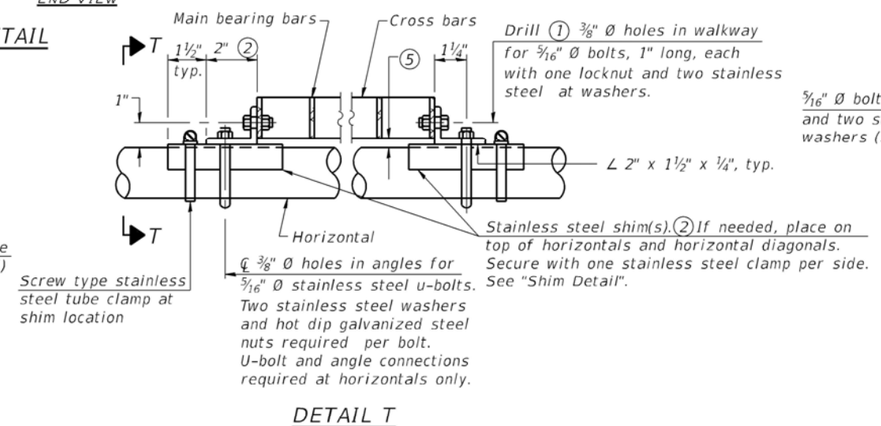

DETAIL T

(Continuous Truss grating)

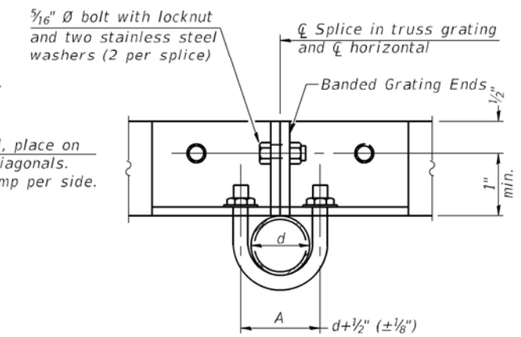

SECTION T'-T'

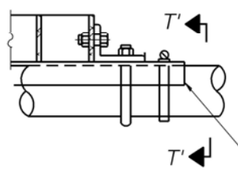

DETAIL T'

(Truss grating splice)

Details not shown same as Detail T. Alternate materials may be used subject to the Engineer's review and approval.

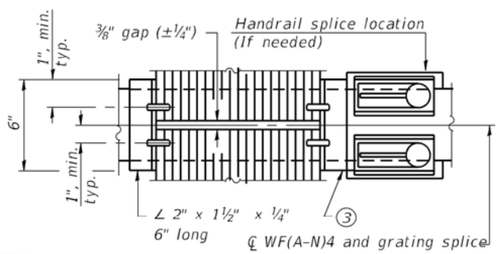

(AT WALKWAY GRATING SPLICE)

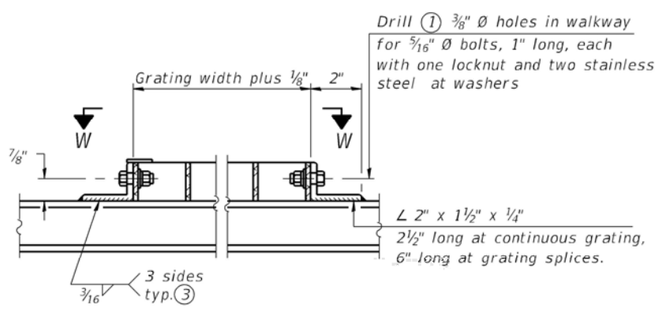

DETAIL W

(Walkway grating)

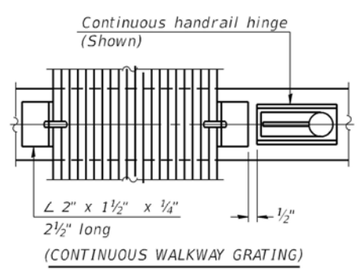

(CONTINUOUS WALKWAY GRATING)

SECTION W-W

SPECIFICATIONS FOR STANDARD ALUMINUM GRATING

Main Bearing Bars shall be 3/16" x 1½" on 1 3/16" centers and conform to ASTM B221 Alloy 6061-T6.

Cross bars shall be 3/16" x 1½" on 4" centers and conform to ASTM B221 Alloy 6063-T5 or 6061-T6.

OR

Aluminum Grating with modi ed "t" sections for main bearing bars shall meet the following requirements:

Main bars shall conform to ASTM B221 Alloy 6061-T6 and have a minimum section modulus equal to 0.0705 in.³ per bar, a depth of 1½", spaced on 1 3/16" centers.

Cross bars shall conform to ASTM B221 Alloy 6063-T5 or T-42 and spaced on 4" centers.

Structure Number	Station	A	⑥ B	C	⑥ D
5S0101074R180.3	1132+75	5½"	6'-6"	4'-6"	11'-6"

① Drilling holes in grating may be done in shop or eld, based on Contractor's preference and subject to accurate alignment.

② Stainless steel shims shall be placed as shown in Detail T if needed to compensate for alignment variations between horizontal and diagonal pipes beyond adjustment provided by angles. Thicker shims may be used subject to shims performing properly.

③ If Handrail Joint present, weld angle to WF(A-N)4 and ¼" extension bars. (See Base Sheet OS-A-11.)

④ PL 1/8" x ½" x 2" welded to handrail posts to protect locations that contact grating.

⑤ Tube to grating gap may vary from 0 to ½", max. to align walkway, allow for camber, etc.

⑥ Based on actual height of tallest sign given on OS-A-1.

OS-A-10 2-17-2017

MODEL: PNP-174
FILE NAME: ...\D570C01-sht-SGN_OHDET_008_OS-A-10.dgn

Kaskaskia Engineering Group, LLC

USER NAME = Matt Overbey	DESIGNED - MLC	REVISED -	STATE OF ILLINOIS DEPARTMENT OF TRANSPORTATION
	DRAWN - RJO	REVISED -	
PLOT SCALE = 2.0000 ' / in.	CHECKED - JW	REVISED -	
PLOT DATE = 1/25/2022 - 8:59:06 PM	DATE - JANUARY 2022	REVISED -	

OVERHEAD SIGN STRUCTURES
ALUMINUM WALKWAY DETAILS

SCALE: N.T.S. | SHEET 8 OF 20 SHEETS | STA. TO STA.

F.A.I. RTE.	SECTION	COUNTY	TOTAL SHEETS	SHEET NO.
57	10-(33,34,5,14)R & (10-34)B	CHAMPAIGN	1182	803

CONTRACT NO. 70C01

ILLINOIS FED. AID PROJECT

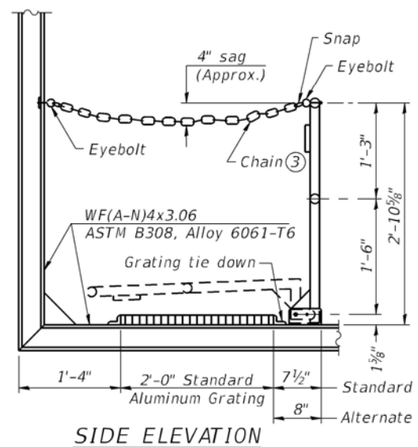

SIDE ELEVATION
(Showing safety chain w/o sign)

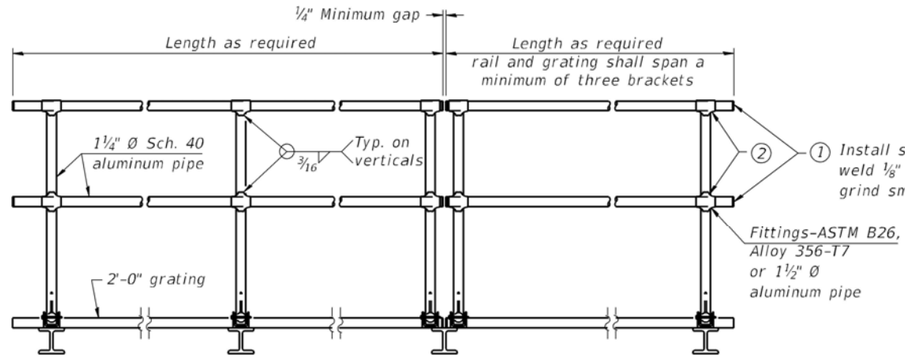

FRONT ELEVATION

HANDRAIL DETAILS

Handrail pipe shall be ASTM B241 or B429, Alloy 6063-T6 or Alloy 6061-T6.

② Horizontal handrail member shall be continuous thru tting. Provide 7/16" Ø hole in tting for ⅜" Ø bolt. Field drill 7/16" Ø hole in horizontal rail member. Provide locknut and two stainless steel washers for bolt. (Use 5/16" eyebolts in 7/16"Ø holes on top rail at ends only.)

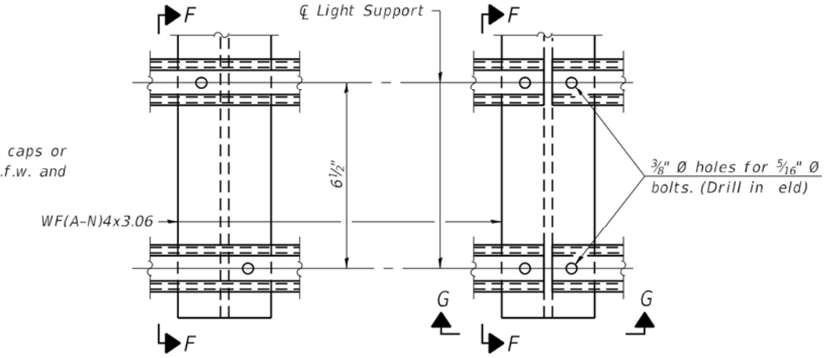

DETAIL F

DETAIL G

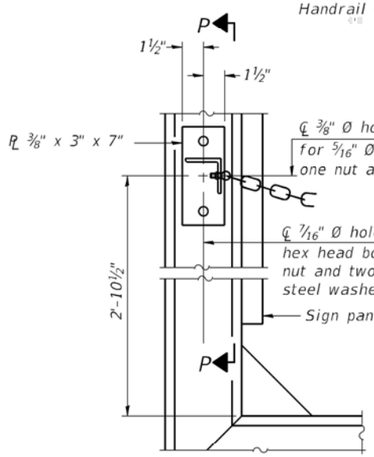

ALTERNATE SAFETY CHAIN ATTACHMENT
(With Sign Present)
Items not shown same as "Side Elevation" of "Handrail Details"

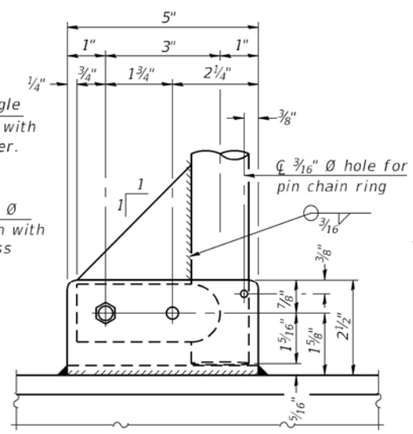

SIDE ELEVATION

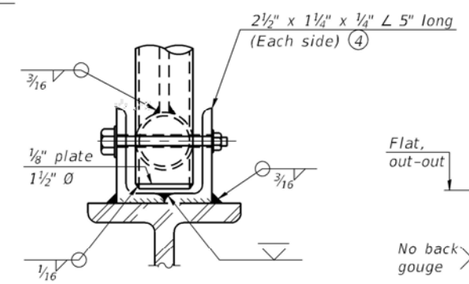

FRONT ELEVATION
See "Elevation" at right for dimensions.

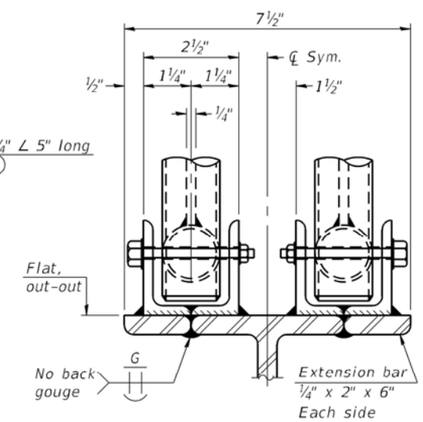

ELEVATION AT HANDRAIL JOINT ④

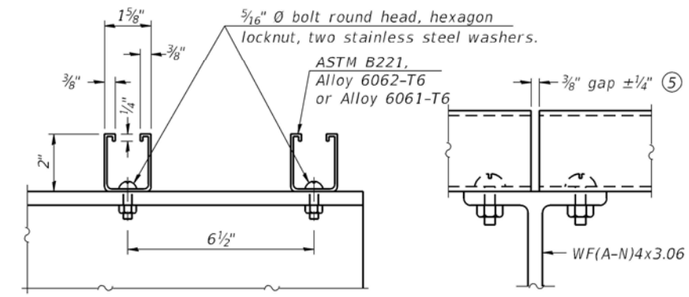

SECTION F-F

SECTION G-G

LIGHTING FIXTURE MOUNTS (IF REQUIRED)

⑤ Field cut ends of light support channels shall be free of burrs or hazardous projections and coated with zinc-rich primer or equivalent.

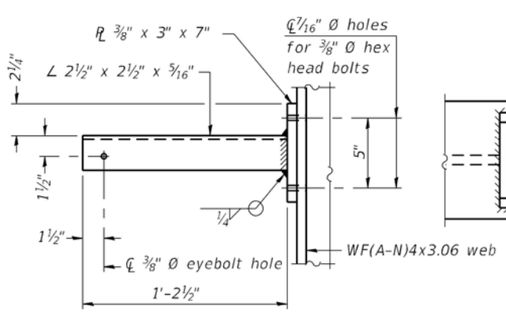

SECTION P-P

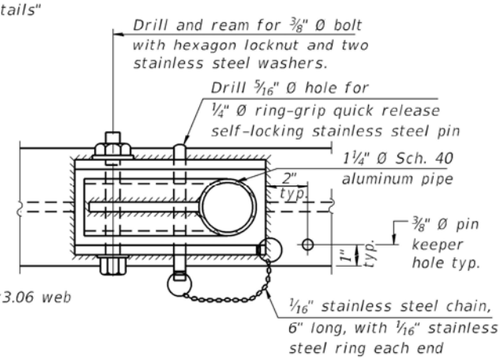

PLAN

DETAIL E HANDRAIL HINGE

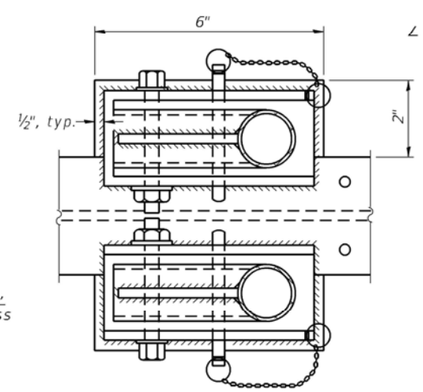

PLAN AT HANDRAIL JOINT
Details not shown same as "PLAN"

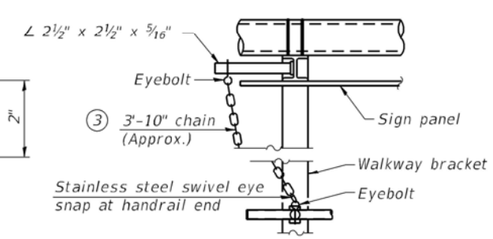

ALTERNATE SAFETY CHAIN ATTACHMENT
Details not shown similar to "Safety Chain" Details
(Walkway omitted for clarity)

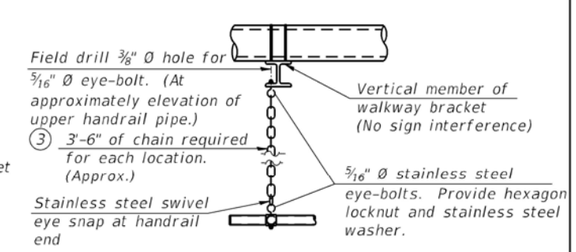

SAFETY CHAIN
One required for each end of each walkway.

③ 3/16" Type 304L stainless steel chain, approximately 12 links per foot.

④ Extrusions may be used in lieu of the details shown, with approval of the Engineer.

OS-A-11 2-17-2017

MODEL: PNP-174
FILE NAME: ...\D570C01-sht-SGN_OHDET_009_OS-A-11.dgn

Kaskaskia Engineering Group, LLC

USER NAME = Matt Overbey	DESIGNED - MLC	REVISED -	
	DRAWN - RJO	REVISED -	
PLOT SCALE = 2.0000 ' / in.	CHECKED - JW	REVISED -	
PLOT DATE = 1/25/2022 - 8:59:11 PM	DATE - JANUARY 2022	REVISED -	

STATE OF ILLINOIS
DEPARTMENT OF TRANSPORTATION

OVERHEAD SIGN STRUCTURES
ALUMINUM HANDRAIL DETAILS

SCALE: N.T.S. | SHEET 9 OF 20 SHEETS | STA. TO STA.

F.A.I. RTE.	SECTION	COUNTY	TOTAL SHEETS	SHEET NO.
57	10-(33,34,5,14)R & (10-34)B	CHAMPAIGN	1182	804

CONTRACT NO. 70C01
ILLINOIS FED. AID PROJECT

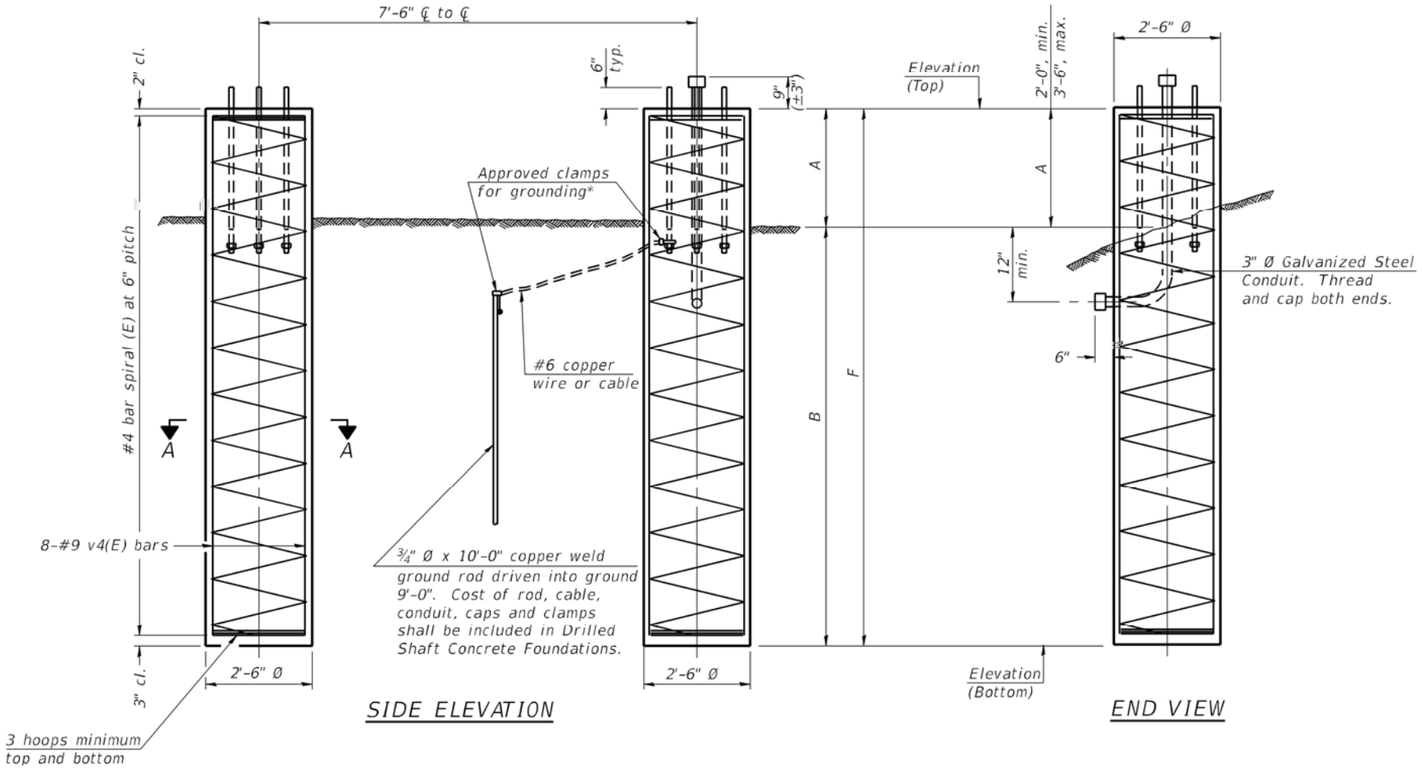

SIDE ELEVATION

END VIEW

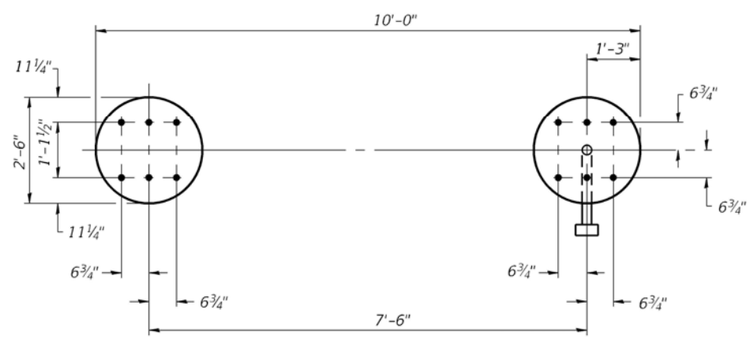

PLAN

For anchor rod size and placement, see Support Frame Detail Sheet.

* Anchor rod shall be ground or led to bright metal at clamp and cable connection location.

BAR LIST - EACH FOUNDATION

Bar	Number	Size	Length	Shape
v4(E)	16	#9	F less 5"	———
#4 bar spiral (E) - see Side Elevation				

NOTES:

The foundation dimensions shown are based on the presence of mostly cohesive soils with an average Uncon ned Compressive Strength (Qu) of at least 1.25 tsf, which must be determined by previous soil investigations at the jobsite. When other conditions are indicated, the boring data will be included in the plans and the foundation dimensions shown will be the result of site speci c designs.

If the conditions encountered are di erent than those indicated, the Contractor shall notify the Engineer to determine if the foundation dimensions need to be modi ed. If dimensions "B" or "F" are revised by more than 12" by the Contractor, "as-built" plans shall be prepared and submitted to the District Bureau of Operations for future reference.

No sonotubes or decomposable forms shall be used below the lower conduit entrance.

Permanent metal forms or other shielding may not be left in place below that elevation without the Engineer's written permission.

Concrete shall be placed monolithically, without construction joints.

Back ll shall be placed per Article 502 of Standard Speci cation and prior to erection of support column.

A normal surface nish followed by a Concrete Sealer application will be required on concrete surfaces above the lowest elevation 6" below nished ground line. Cost included in Drilled Shaft Concrete Foundation.

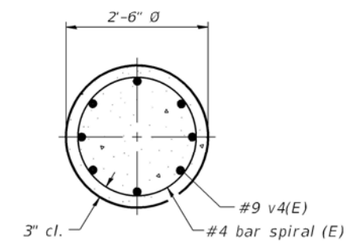

SECTION A-A

DETAILS FOR 8" Ø SUPPORT FRAME TYPE I-A TRUSS

Structure Number	Station	Left Foundation					Right Foundation					Class DS Concrete (Cu. Yds.)
		Elevation Top	Elevation Bottom	A	B	F	Elevation Top	Elevation Bottom	A	B	F	
5S010I074R180.3	1132+75	-	-	-	-	-	763.49	747.81	2'-2 1/8"	13'-6"	15'-8 1/8"	5.8

0S4-F2 2-17-2017

MODEL: PNP-174
FILE NAME: ...0570C01-sht-SGN_OHDET_010_OS4-F2.dgn

Kaskaskia Engineering Group, LLC

USER NAME = Matt Overbey	DESIGNED - MLC	REVISED -	
	DRAWN - RJO	REVISED -	
PLOT SCALE = 2.0000 ' / in.	CHECKED - JW	REVISED -	
PLOT DATE = 1/25/2022 - 8:59:13 PM	DATE - JANUARY 2022	REVISED -	

STATE OF ILLINOIS
DEPARTMENT OF TRANSPORTATION

OVERHEAD SIGN STRUCTURES
DRILLED SHAFT DETAILS

SCALE: N.T.S. | SHEET 10 OF 20 SHEETS | STA. TO STA.

F.A.I. RTE.	SECTION	COUNTY	TOTAL SHEETS	SHEET NO.
57	10-(33,34,5,14)R & (10-34)B	CHAMPAIGN	1182	805
		CONTRACT NO. 70C01		
		ILLINOIS FED. AID PROJECT		

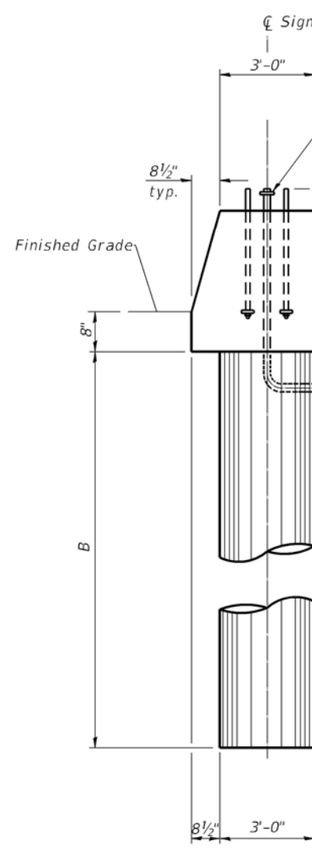

END VIEW

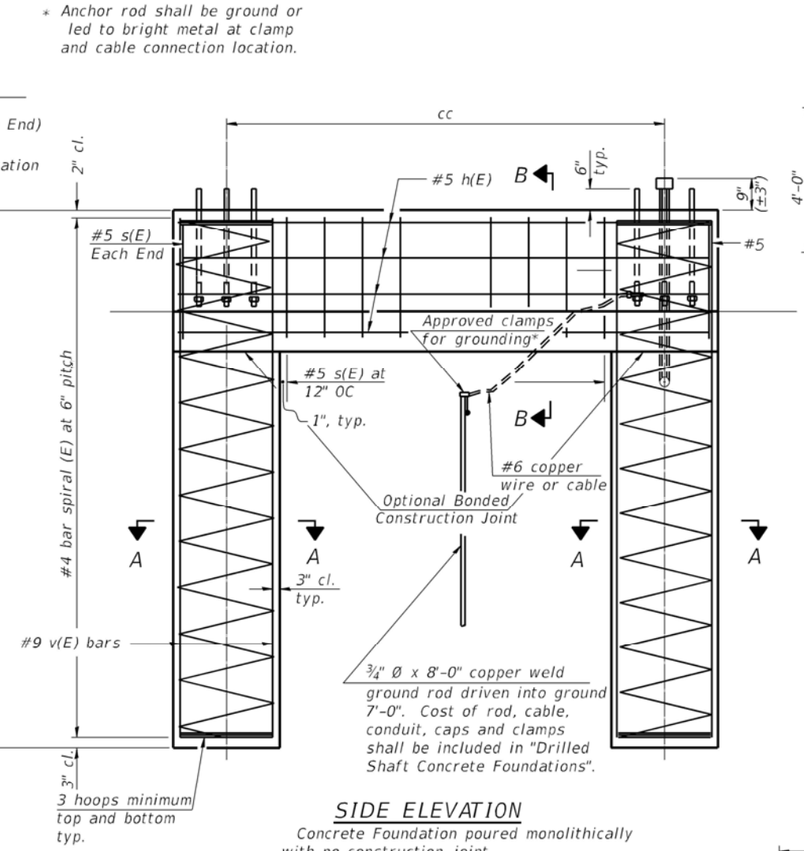

SIDE ELEVATION

Concrete Foundation poured monolithically with no construction joint.

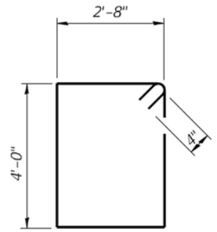

BAR s(E)

NOTES:

The foundation dimensions shown are based on the presence of mostly cohesive soils with an average Uncon ned Compressive Strength (Qu) of at least 1.25 tsf, which must be determined by previous soil investigations at the jobsite. When other conditions are indicated, the boring data will be included in the plans and the foundation dimensions shown will be the result of site speci c designs.

If the conditions encountered are di erent than those indicated, the Contractor shall notify the Engineer to determine if the foundation dimensions need to be modi ed. If dimensions "B" or "F" are revised by more than 12" by the Contractor, "as-built" plans shall be prepared and submitted to the District Bureau of Operations for future reference.

No sonotubes or decomposable forms shall be used below the lower conduit entrance.

Permanent metal forms or other shielding may not be left in place below that elevation without the Engineer's written permission.

Concrete shall be placed monolithically, without construction joints.

Back ll shall be placed per Article 502 of Standard Speci cation and prior to erection of support column.

A normal surface nish followed by a Concrete Sealer application will be required on concrete surfaces above the lowest elevation 6" below nished ground line. Cost included in Drilled Shaft Concrete Foundation.

Pipe Support Frames	cc	M	a	a/2
6"Ø	7'-0"	9'-6"	0'-11"	5½"
8"Ø	7'-6"	10'-0"	1'-1½"	6¾"
10"Ø	8'-3"	11'-3"	1'-3"	7½"
12"Ø	9'-0"	12'-0"	1'-6"	9"

All dimensions in parenthesis are for 42" high barrier.

BAR LIST - EACH FOUNDATION

Bar	Number	Size	Length	Shape
h(E)	10	#5	M less 4"	——
s(E)	Varies	#5	14'-0"	□
v(E)	16	#9	F less 0'-5"	——
v(E)	24	#9	F less 0'-5"	——
#4(E) bar spiral - see Side Elevation				

6" Ø and 8" Ø Support Frame

10" Ø and 12" Ø Support Frame

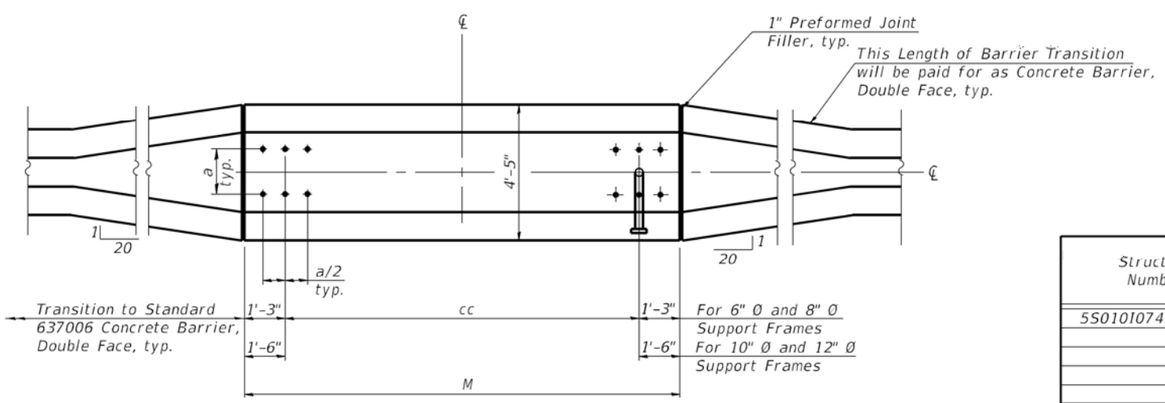

PLAN

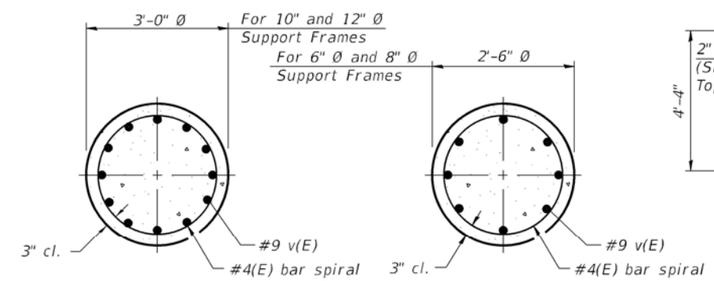

SECTION A-A

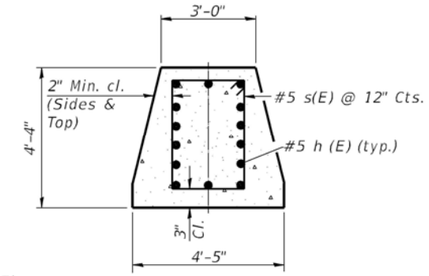

SECTION B-B

Structure Number	Station	Left Foundation				Right Foundation				Class DS Concrete (Cu. Yds.)
		Elevation Top	Elevation Bottom	B	F	Elevation Top	Elevation Bottom	B	F	
5S010I074R180.3	1132+75	764.74	746.91	13'-6"	17'-10"	-	-	-	-	11.1

MODEL: PNP-174
FILE NAME: ...\D570C01-sht-SGN_OHDET_011_OS4-HED.dgn

Kaskaskia Engineering Group, LLC

USER NAME = Matt Overbey	DESIGNED - MLC	REVISED -	STATE OF ILLINOIS DEPARTMENT OF TRANSPORTATION
	DRAWN - RJO	REVISED -	
PLOT SCALE = 2.0000 ' / in.	CHECKED - JW	REVISED -	
PLOT DATE = 1/25/2022 - 8:59:16 PM	DATE - JANUARY 2022	REVISED -	

OVERHEAD SIGN STRUCTURES
MEDIAN SUPPORT FOUNDATION DETAILS

SCALE: N.T.S. | SHEET 11 OF 20 SHEETS | STA. TO STA.

F.A.I. RTE.	SECTION	COUNTY	TOTAL SHEETS	SHEET NO.
57	10-(33,34,5,14)R & (10-34)B	CHAMPAIGN	1182	806

CONTRACT NO. 70C01

ILLINOIS FED. AID PROJECT

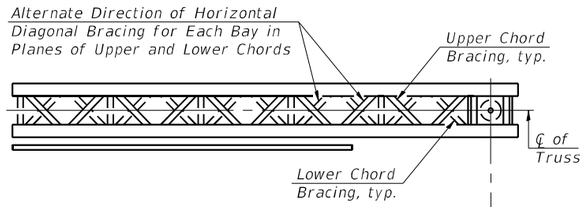

TYPICAL PLAN

(Walkway not shown)

Structure Number	Station	Design Truss Type	Cantilever Length (L)	Elev. A	Dim. D	Ds	Total Sign Area
5C010I057R237.8	630+50	III-C-A	32'-6"	773.43	19'-3"	11'-0"	159.5 SF
5C010I057R238.0	638+50	III-C-A	33'-4"	773.13	18'-1"	11'-0"	159.5 SF
5C010I074R179.8	1106+25	III-C-A	32'-2"	765.06	18'-11"	11'-0"	159.5 SF

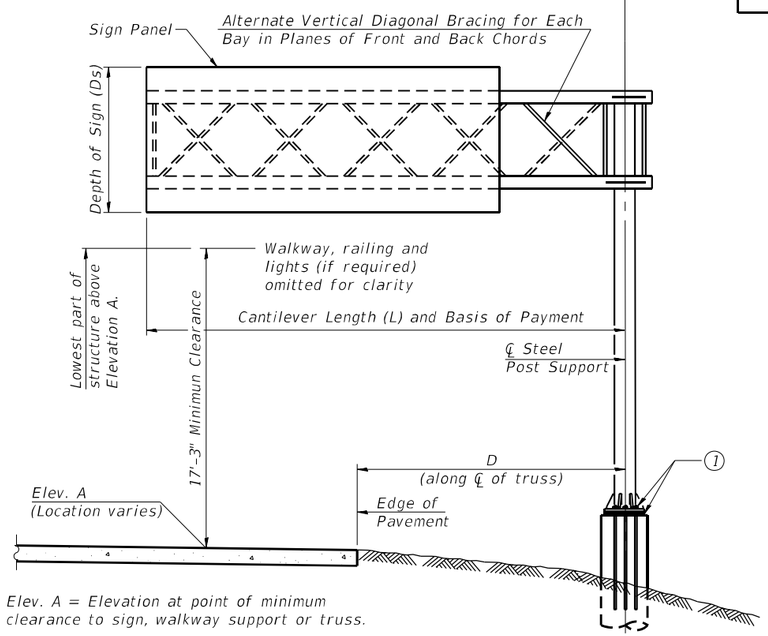

Elev. A = Elevation at point of minimum clearance to sign, walkway support or truss.

TYPICAL ELEVATION

Looking in Direction of Traffic

Sign support structures may be subject to damaging vibrations and oscillations when sign panels are not in place during erection or maintenance of the structure. To avoid these vibrations and oscillations, consideration should be given to attaching temporary blank sign panels to the structure.

Truss Type	Maximum Sign Area	Maximum Length
I-C-A	170 Sq. Ft.	25 Ft.
II-C-A	340 Sq. Ft.	30 Ft.
III-C-A	400 Sq. Ft.	40 Ft.

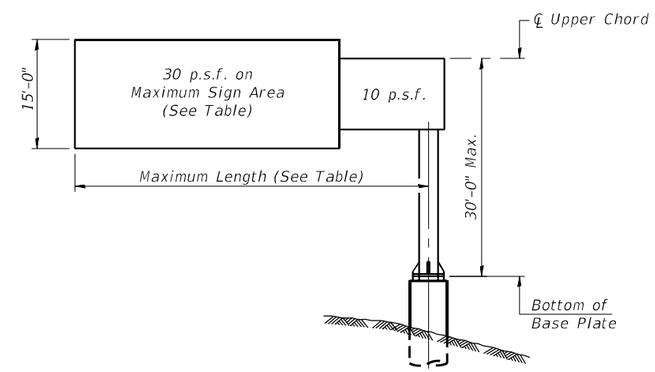

DESIGN WIND LOADING DIAGRAM

Parameters shown are basis for I.D.O.T. Standards Installations not within dimensional limits shown require special analysis for all components.

Note:
Trusses shall be shipped individually with adequate provision to prevent detrimental motion during transport. This may require ropes between horizontals and diagonals or energy dissipating (elastic) ties to the vehicle. The contractor is responsible for maintaining the configuration and protection of the trusses.

(1) After adjustments to level truss and insure adequate vertical clearance, all top and leveling nuts shall be tightened against the base plate with a minimum torque of 200 lb.-ft. Stainless steel mesh shall then be placed around the perimeter of the base plate. Secure to base plate with stainless steel banding.

* If M270 Gr. 50W (M222) steel is proposed, chemistry for plate to be used shall first be approved by the Engineer as suitable for galvanizing and welding.

GENERAL NOTES

DESIGN: AASHTO Standard Specifications for Structural Supports for Highway Signs, Luminaires and Traffic Signals. ("AASHTO Specifications")

CONSTRUCTION: Current (at time of letting) Illinois Department of Transportation Standard Specifications for Road and Bridge Construction, Supplemental Specifications and Special Provisions. ("Standard Specifications")

LOADING: 90 M.P.H. WIND VELOCITY

WALKWAY LOADING: Dead load plus 500 lbs. concentrated live load.

DESIGN STRESSES:
Field Units
f'c = 3,500 p.s.i.
fy = 60,000 p.s.i. (reinforcement)

WELDING: All welds to be continuous unless otherwise shown. All welding to be done in accordance with current AWS D1.1 and D1.2 Structural Welding Codes (Steel and Aluminum) and the Standard Specificiations.

MATERIALS: Aluminum Alloys as shown throughout plans. All Structural Steel Pipe shall be ASTM A53 Grade B or A500 Grade B or C. If A500 pipe is substituted for A53, then the outside diameter shall be as detailed and wall thickness greater than or equal to A53.
All Structural Steel Plates and Shapes shall conform to AASHTO M270 Gr. 36, Gr. 50 or Gr. 50W*. Stainless steel for shims, sleeves and handhole covers shall be ASTM A240, Type 302 or 304, or another alloy suitable for exterior exposure and acceptable to the Engineer.
The steel pipe and stiffening ribs at the base plate for the column shall have a minimum longitudinal Charpy V-Notch (CVN) energy of 15 lb.-ft. at 40° F. (Zone 2) before galvanizing.

FASTENERS FOR ALUMINUM TRUSSES: All bolts noted as "high strength" must satisfy the requirements of AASHTO M164 (ASTM A325), or approved alternate, and must have matching lock nuts. Threaded studs for splices (if Members interfere) must satisfy the requirements of ASTM A449, ASTM A193, Grade B7, or approved alternate, and must have matching lock nuts. Bolts and lock nuts not required to be high strength must satisfy the requirements of ASTM A307. All bolts and lock nuts must be hot dip galvanized per AASHTO M232. The lock nuts must have nylon or steel inserts. A stainless steel flat washer conforming to ASTM A240 Type 302 or 304, is required under both head and nut or under both nuts where threaded studs are used. High strength bolt installation shall conform to Article 505.04 (f) (2)d of the IDOT Standard Specifications for Road and Bridge Construction. Rotational capacity ("ROCAP") testing of bolts will not be required.

U-BOLTS AND EYEBOLTS: U-Bolts and Eyebolts must be produced from ASTM A276 Type 304, 304L, 316 or 316L, Condition A, cold finished stainless steel, or an equivalent material acceptable to the Engineer. All nuts for U-Bolts and Eyebolts must be lock nuts equivalent to ASTM A307 with nylon or steel inserts and hot dip galvanized per AASHTO M232. A stainless steel flat washer conforming to ASTM A240, Type 302 or 304, is required under each U-Bolt and Eyebolt lock nut.

GALVANIZING: All Steel Grating, Plates, Shapes and Pipe shall be Hot Dip Galvanized after fabrication in accordance with AASHTO M111. Painting is not permitted.

ANCHOR RODS: Shall conform to ASTM F1554 Gr. 105.

CONCRETE SURFACES: All concrete surfaces above an elevation 6" below the lowest final ground line at each foundation shall be cleaned and coated with Concrete Sealer in accordance with the Standard Specifications.

REINFORCEMENT BARS: Reinforcement Bars designated (E) shall be epoxy coated in accordance with the Standard Specifications.

FOUNDATIONS: The contract unit price for Drilled Shaft Concrete Foundations shall include reinforcement bars complete in place.

TOTAL BILL OF MATERIAL

ITEM	UNIT	TOTAL
OVERHEAD SIGN STRUCTURE CANTILEVER TYPE III-C-A	Foot	98
OVERHEAD SIGN STRUCTURE WALKWAY, CANTILEVER, TYPE A	Foot	50
DRILLED SHAFT CONCRETE FOUNDATIONS	Cu. Yds.	24.1

STATE OF ILLINOIS
JIA WANG
081-006586
CHICAGO
LICENSED STRUCTURAL ENGINEER

03/16/2022

JIA WANG
LICENSED STRUCTURAL ENGINEER
STATE OF ILLINOIS LIC. No. 081-006586
EXPIRES: 11-30-2022

OSC-A-1 2-17-2017

MODEL: PNP-174
FILE NAME: ...\D570C01-sht-SGN_OHDET_012_OSC-A-1.dgn

Kaskaskia Engineering Group, LLC
PROFESSIONAL REGISTRATIONS: Illinois Professional Design Firm; Professional Engineering Group
200 E. Main St., Suite 100, Belleville, Illinois 62220; 618.233.5077 phone; 618.233.5077 fax; www.kaskaskiaeng.com
LICENSE NO. 184.001773; 20.0000195

USER NAME =	DESIGNED - MLC	REVISED - 3/16/2022 JW	STATE OF ILLINOIS DEPARTMENT OF TRANSPORTATION
	DRAWN - RJO	REVISED -	
PLOT SCALE = 2.0000 ' / in.	CHECKED - JW	REVISED -	
PLOT DATE = 03/16/22 - 2:17:50 PM	DATE - FEBRUARY 2022	REVISED -	

CANTILEVER SIGN STRUCTURES – GENERAL PLAN & ELEVATION
ALUMINUM TRUSS & STEEL POST

SCALE: N.T.S. | SHEET 12 OF 20 SHEETS | STA. TO STA.

F.A.I. RTE.	SECTION	COUNTY	TOTAL SHEETS	SHEET NO.
57	10-(33,34,5,14)R & (10-34)B	CHAMPAIGN	1182	807
		CONTRACT NO. 70C01		
	ILLINOIS FED. AID PROJECT			

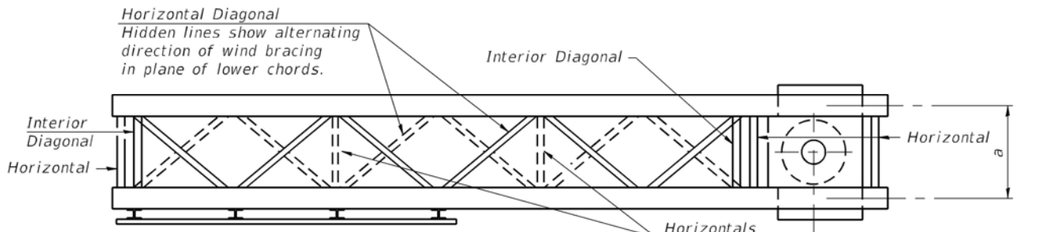

PLAN
(Walkway not shown)

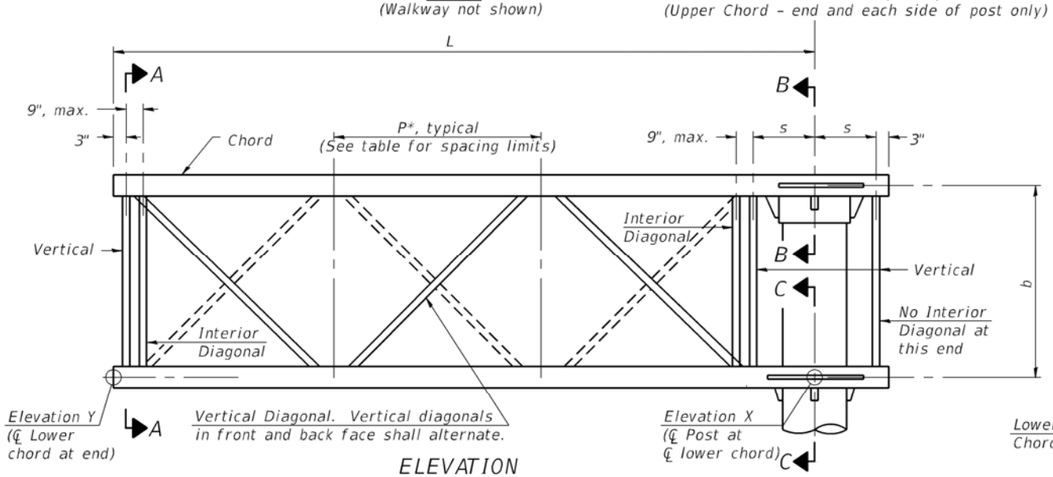

ELEVATION
(Sign and walkway omitted for clarity)

TYPICAL TRUSS UNIT

For Section B-B and Section C-C, see Base Sheet OSC-A-3.

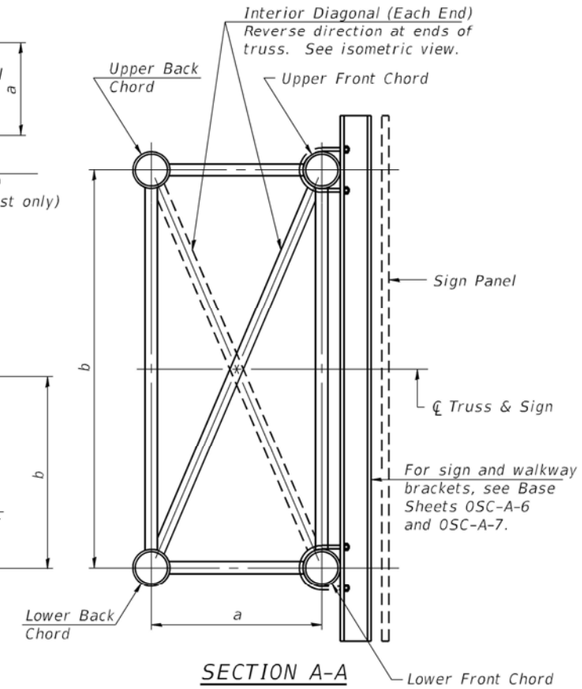

SECTION A-A

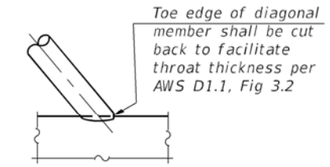

DETAIL A

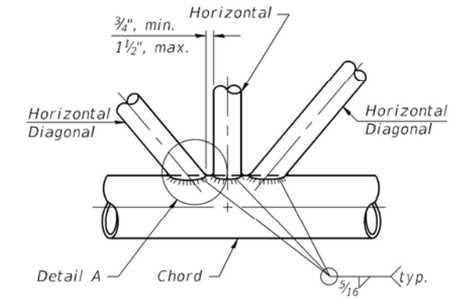

TRUSS INTERIOR JOINT DETAIL

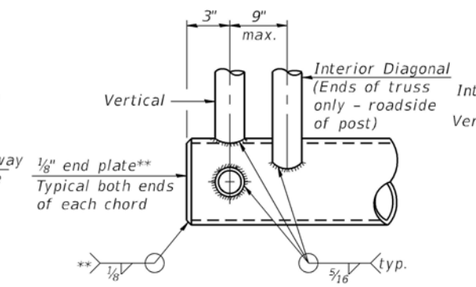

CANTILEVER END JOINT DETAIL

** Contractor may alternatively use standard aluminum drive- t cap to close ends. ½" Ø Drain hole in end plate / drive- t cap.

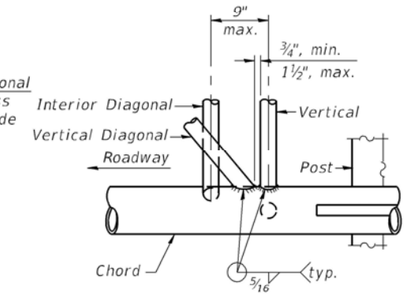

POST END JOINT DETAIL

Note:
There are twice as many horizontal diagonals as there are vertical diagonals.

TRUSS UNIT TABLE

Truss Type	Dimension "a"	Dimension "b"	Dimension "s"	Limits for Panel Spacing (P)*	Up. & Low. Chord O.D.	Up. & Low. Chord Wall	Verticals; Horizontals; Vertical, Horizontal, and Interior Diagonals O.D.	Verticals; Horizontals; Vertical, Horizontal, and Interior Diagonals Wall
I-C-A	24"	54"	16"	36" min. to 48" max.	5"	5/16"	2½"	5/16"
II-C-A	36"	66"	21"	42" min. to 54" max.	6½"	5/16"	3¼"	5/16"
III-C-A (35' Max.)	36"	84"	21"	48" min. to 66" max.	7"	⅜"	3½"	⅜"
III-C-A (>35' to 40')	36"	84"	21"	48" min. to 66" max.	8"	⅜"	3½"	⅜"

$$*P = \frac{L-s-3"}{\#\ Panels}$$

Structure Number	Station	Truss Type	Design Length (L)	Number of Panels Per Unit	Panel Length (P)*
5C010I057R237.8	630+50	III-C-A	32'-6"	7	4'-4"
5C010I057R238.0	638+50	III-C-A	33'-4"	7	4'-5"
5C010I074R179.8	1106+25	III-C-A	32'-2"	7	4'-3"

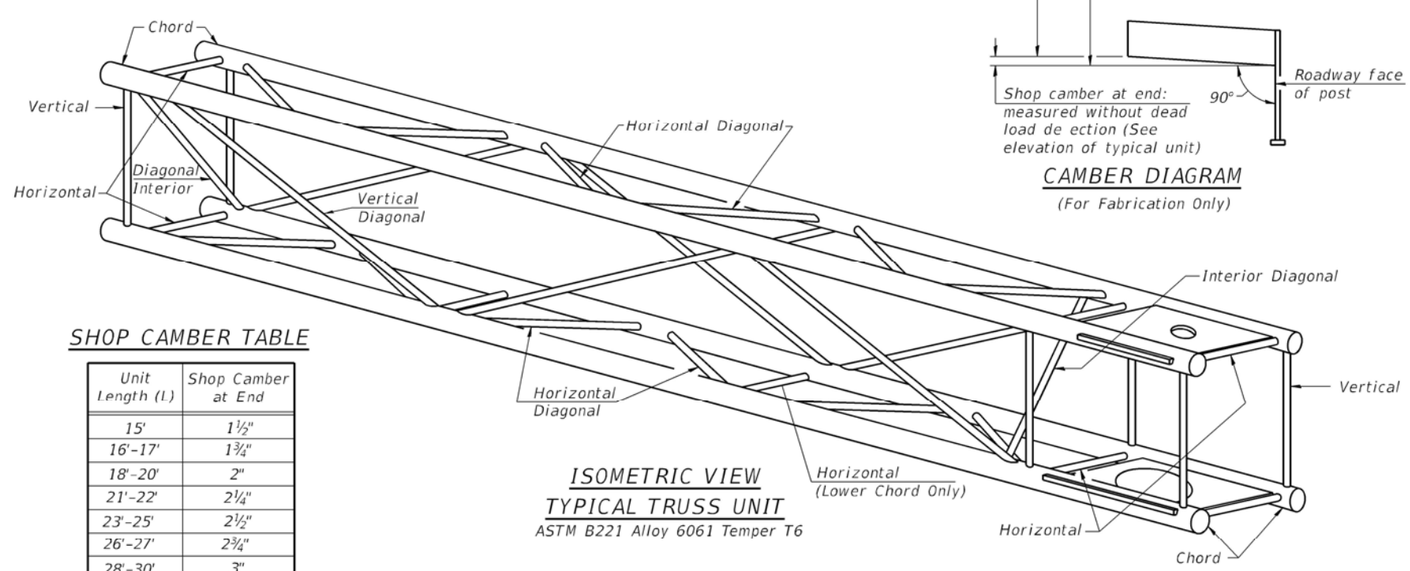

ISOMETRIC VIEW
TYPICAL TRUSS UNIT
ASTM B221 Alloy 6061 Temper T6

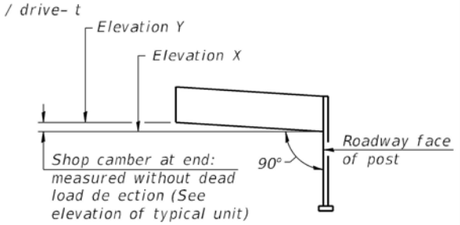

CAMBER DIAGRAM
(For Fabrication Only)

SHOP CAMBER TABLE

Unit Length (L)	Shop Camber at End
15'	1½"
16'-17'	1¾"
18'-20'	2"
21'-22'	2¼"
23'-25'	2½"
26'-27'	2¾"
28'-30'	3"
31'-32'	3¼"
33'-35'	3½"
36'-37'	4"
38'-40'	4½"

OSC-A-2 2-17-2017

MODEL: PNP-174
FILE NAME: ...\D570C01-sht-SGN_OHDET_013_OSC-A-2.dgn

Kaskaskia Engineering Group, LLC
PROFESSIONAL ENGINEERING
Illinois Professional Design Firm
Professional Engineering Group
LICENSE NO. 184.001010
EXPIRATION DATE 25-0000566

USER NAME = Matt Overbey	DESIGNED - MLC	REVISED -	
	DRAWN - RJO	REVISED -	
PLOT SCALE = 2.0000 ' / in.	CHECKED - JW	REVISED -	
PLOT DATE = 1/25/2022 - 9:00:41 PM	DATE - JANUARY 2022	REVISED -	

STATE OF ILLINOIS
DEPARTMENT OF TRANSPORTATION

CANTILEVER SIGN STRUCTURES - TRUSS DETAILS
ALUMINUM TRUSS & STEEL POST

SCALE: N.T.S. | SHEET 13 OF 20 SHEETS | STA. TO STA.

F.A.I. RTE.	SECTION	COUNTY	TOTAL SHEETS	SHEET NO.
57	10-(33,34,5,14)R & (10-34)B	CHAMPAIGN	1182	808
		CONTRACT NO. 70C01		
		ILLINOIS FED. AID PROJECT		

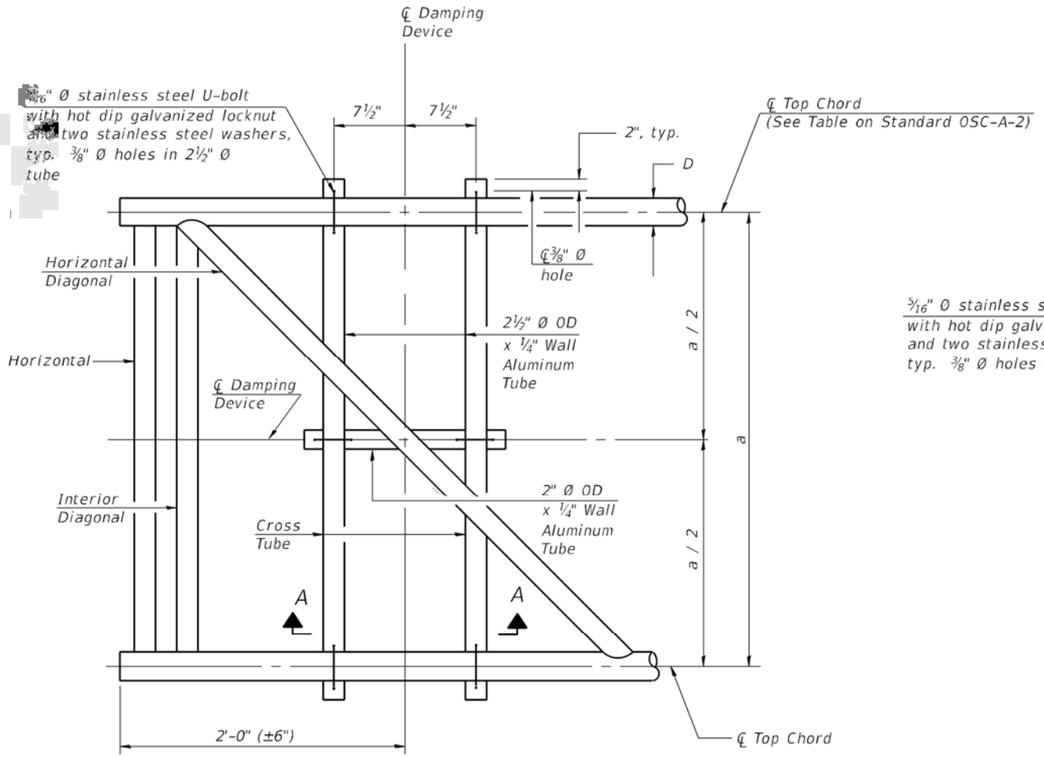

PLAN DETAIL

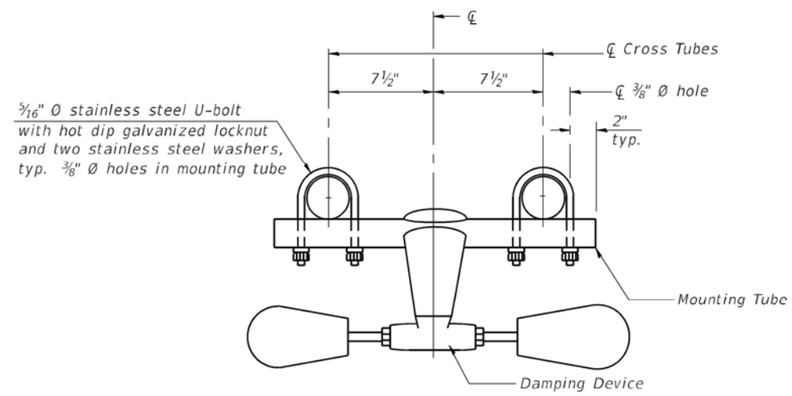

TRUSS DAMPING DEVICE CONNECTION DETAIL

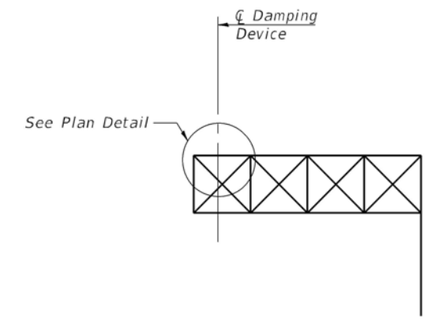

ELEVATION

Aluminum Cantilever Sign Structure

GENERAL NOTES

Damper: One damper per truss. (31 lbs. Stockbridge-Type Aluminum-29" minimum between ends of weights)

Materials: Aluminum tubes shall be ASTM B221 alloy 6061 temper T6

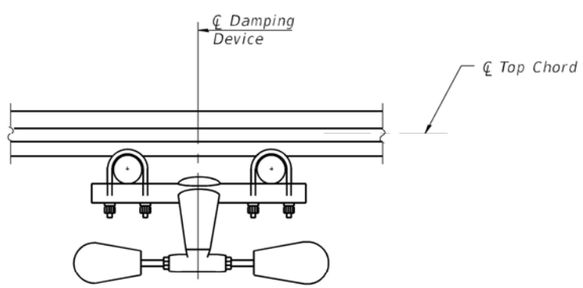

SECTION A-A

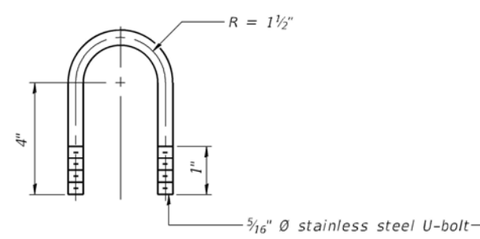

DAMPING DEVICE MOUNTING TUBE U-BOLT DETAIL

(Typical)

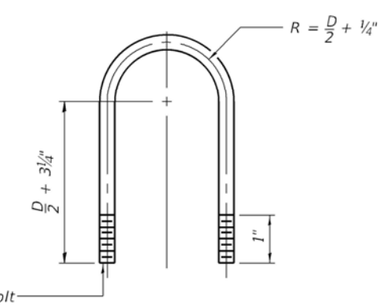

TOP CHORD TO CROSS TUBE U-BOLT DETAIL

(Typical)

OSC-A-D 2-17-2017

MODEL: PNP-174
FILE NAME: ...\0570C01-sht-SGN_OHDET_014_OSC-A-D.dgn

Kaskaskia Engineering Group, LLC

USER NAME = Matt Overbey	DESIGNED - MLC	REVISED -	STATE OF ILLINOIS DEPARTMENT OF TRANSPORTATION
	DRAWN - RJO	REVISED -	
PLOT SCALE = 2.0000 ' / in.	CHECKED - JW	REVISED -	
PLOT DATE = 1/25/2022 - 9:00:44 PM	DATE - JANUARY 2022	REVISED -	

CANTILEVER SIGN STRUCTURE
DAMPING DEVICE

SCALE: N.T.S. | SHEET 14 OF 20 SHEETS | STA. TO STA.

F.A.I. RTE.	SECTION	COUNTY	TOTAL SHEETS	SHEET NO.
57	10-(33,34,5,14)R & (10-34)B	CHAMPAIGN	1182	809

CONTRACT NO. 70C01

ILLINOIS FED. AID PROJECT

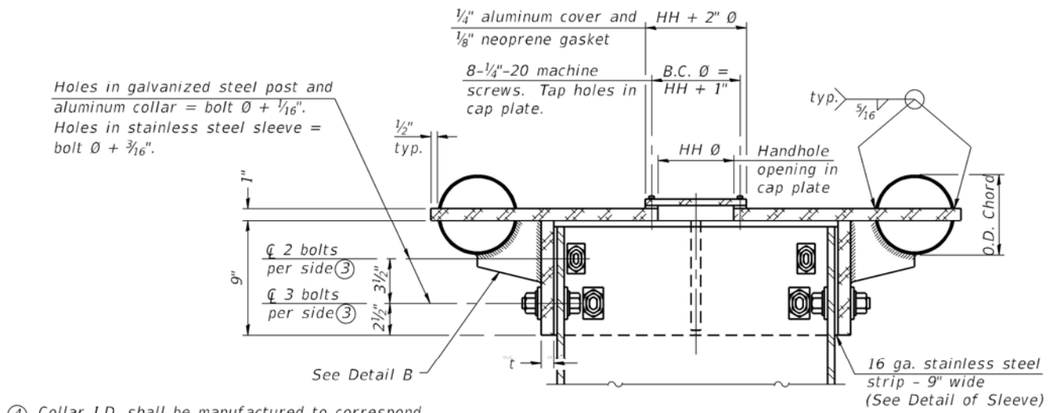

④ Collar I.D. shall be manufactured to correspond to O.D. of actual galvanized post and stainless steel sleeve plus 1/8" (±1/16"). Maximum gap between post and collar at any location equals 1/8" before tightening bolts.

SECTION B-B

Bolts, washers (including contoured washers), and locknuts shall be stainless steel.

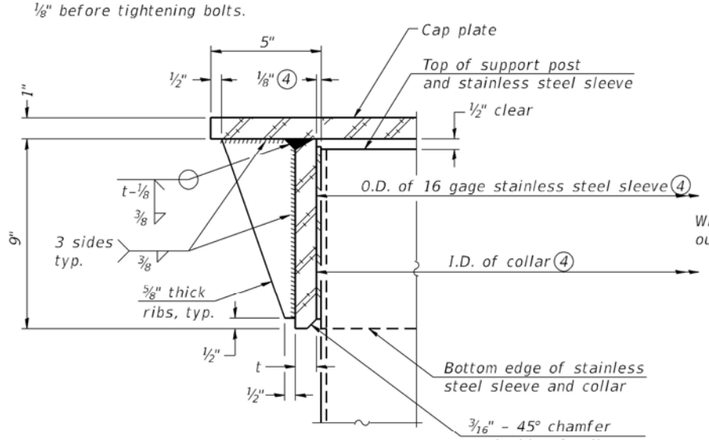

DETAIL A

(Two locations)

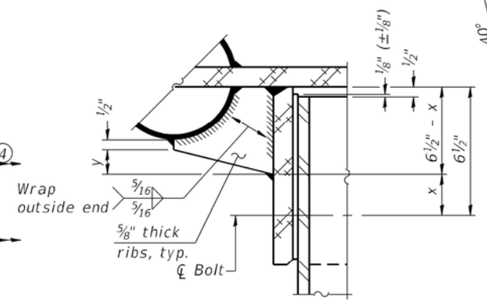

DETAIL B

Two locations
(For details not shown, see Detail C)

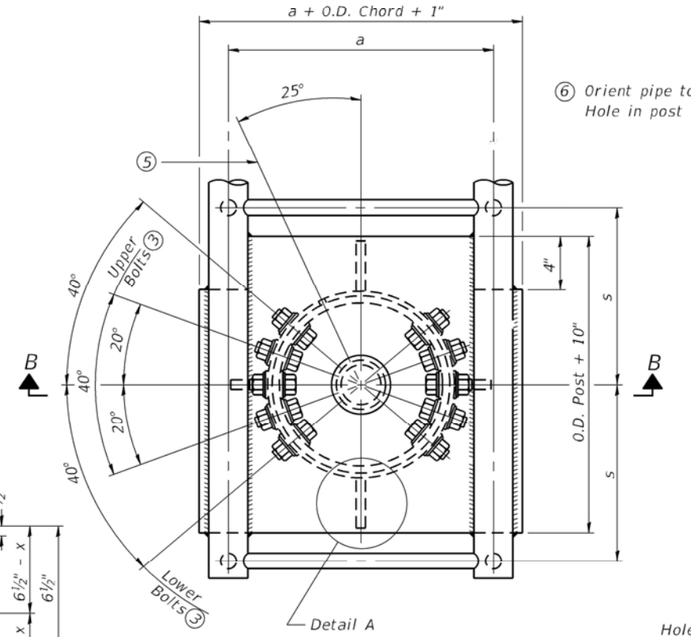

PLAN VIEW - TOP OF COLUMN

⑤ Optional full penetration weld in collar.
(Two locations maximum....(180° apart)....X-ray or UT 100%)

⑥ Orient pipe toward walkway side.
Hole in post = O.D. pipe + 1/8".

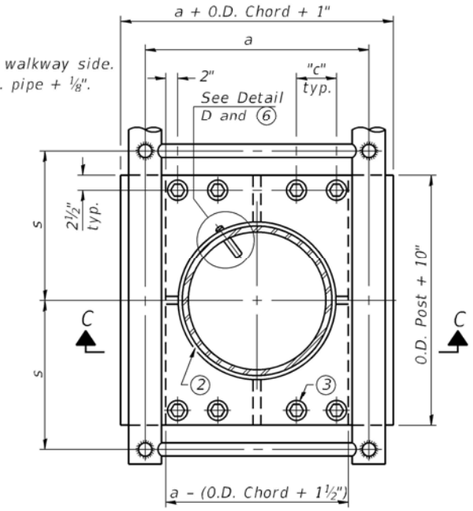

SECTION THRU POST ABOVE LOWER CHORDS

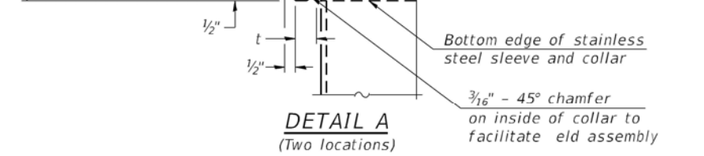

CONTOURED WASHERS

Bolt Size	Contoured Washers	
	Hole Dia.	B
7/8"	1"	2 1/2"
1"	1 1/8"	3"
1 1/4"	1 3/8"	3 1/4"

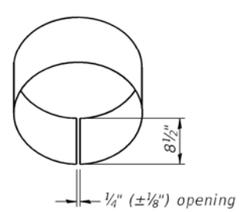

DETAIL OF STAINLESS STEEL SLEEVE

Weld to post after galvanizing.
(Prepare post surface to insure tight, uniform t and allow welding.)
Welds to be 1 1/2" long at 6" cts.
along top edge and at 1/4" opening.

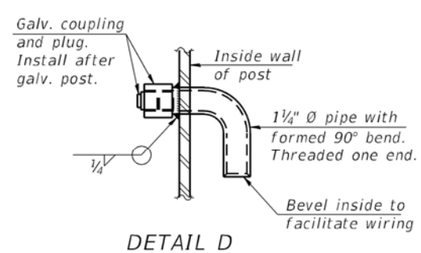

DETAIL D

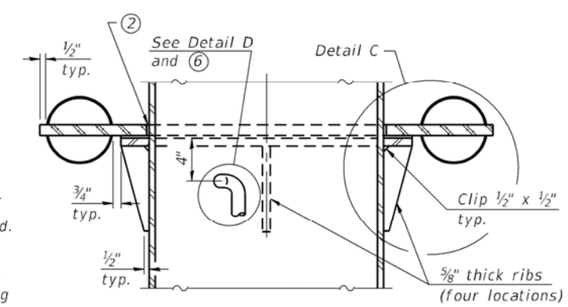

SECTION C-C

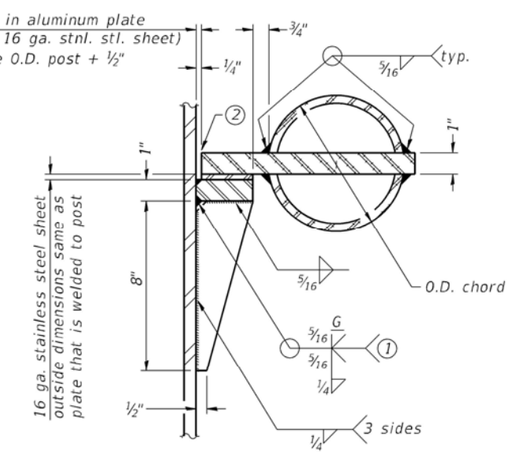

DETAIL C

Truss Type	Post Size	Upper & Lower Connection Bolt Diameter③	Lower Juncture Bolt Spacing Dimension "c"③	Opening in Cap Plate "HH"	Collar Thickness (t)	Side Ribs	
						x	y
I-C-A	16" Ø (83#/')	7/8"	3 1/4"	8"	5/8"	1 3/4"	2 1/4"
II-C-A	24" Ø (125#/')	1"	3 1/2"	12"	7/8"	2"	1 1/4"
III-C-A (35' max.)	24" Ø (125#/')	1 1/4"	3 1/2"	12"	7/8"	2"	1"
III-C-A (>35' to 40')	24" Ø (171#/')	1 1/4"	3 1/2"	12"	7/8"	2"	1"

① Grind top if required to fully seat aluminum plate and stainless steel sheet.

② After tightening lower connection bolts, II gap with non-hardening, silicone caulk suitable for exterior exposure and acceptable to the Engineer. Cost is included in Overhead Sign Structure Cantilever.

③ Upper and lower connection bolts in collar and bolts at lower chord connection shall be high strength with matching locknuts. Connection bolts shall have 2 stainless steel at washers each.

OSC-A-3 2-17-2017

MODEL: PNP-174
FILE NAME: ...\0570C01-sht-SGN_OHDET_015_OSC-A-3.dgn

Kaskaskia Engineering Group, LLC

USER NAME = Matt Overbey	DESIGNED - MLC	REVISED -	STATE OF ILLINOIS DEPARTMENT OF TRANSPORTATION
	DRAWN - RJO	REVISED -	
PLOT SCALE = 2.0000 ' / in.	CHECKED - JW	REVISED -	
PLOT DATE = 1/25/2022 - 9:00:46 PM	DATE - JANUARY 2022	REVISED -	

CANTILEVER SIGN STRUCTURES - JUNCTURE DETAILS
ALUMINUM TRUSS & STEEL POST

SCALE: N.T.S. | SHEET 15 OF 20 SHEETS | STA. TO STA.

F.A.I. RTE.	SECTION	COUNTY	TOTAL SHEETS	SHEET NO.
57	10-(33,34,5,14)R & (10-34)B	CHAMPAIGN	1182	810
		CONTRACT NO. 70C01		
		ILLINOIS FED. AID PROJECT		

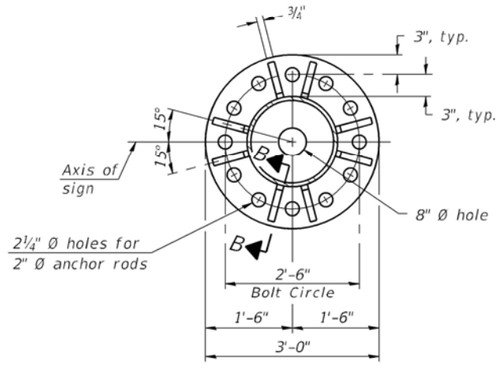

SECTION A-A

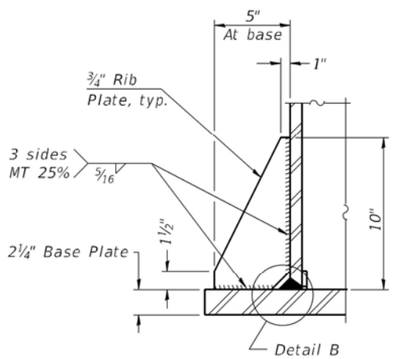

SECTION B-B

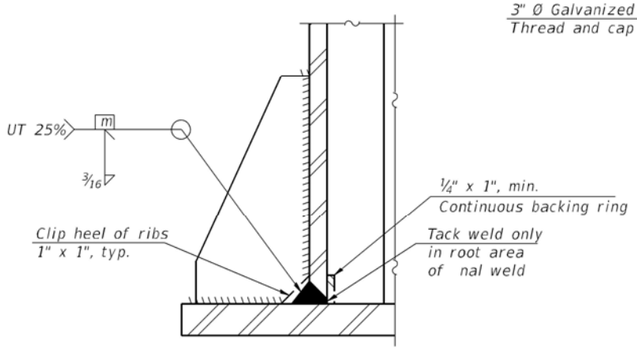

DETAIL B

(Typical rib)

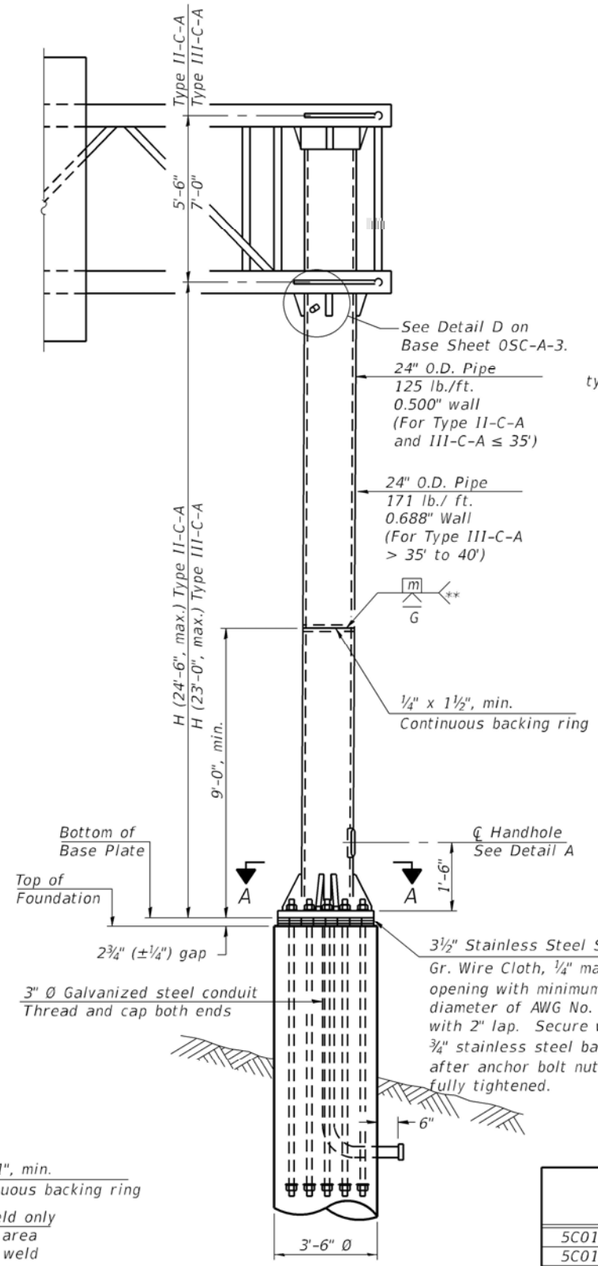

FRONT ELEVATION

For Foundation Details see Base Sheet OSC-A-9.

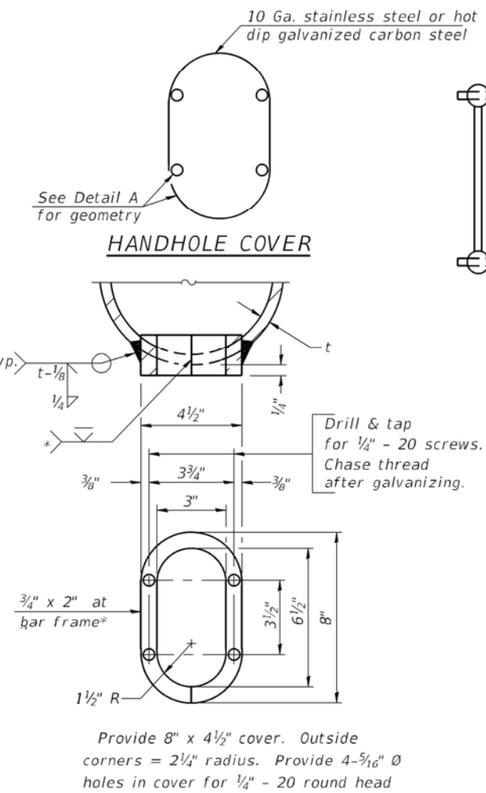

HANDHOLE COVER

Provide 8" x 4½" cover. Outside corners = 2¼" radius. Provide 4-5/16" Ø holes in cover for ¼" - 20 round head hot dip galvanized or stainless steel machine screws. (See cover details.)

DETAIL A

* Bent bars may be butt welded top and bottom or bottom only. In lieu of fabricated handhole frame as shown, may cut from 2" plate (rolling direction vertical). All cut faces to be ground to ANSI Roughness of 500μ in or less.

** Butt welded joint in post is only allowed for post heights (H) over 20 ft. in length. If used, weld procedure must be preapproved by Engineer and joint shall receive 100% RT or UT (tension criteria) at Contractor's expense.

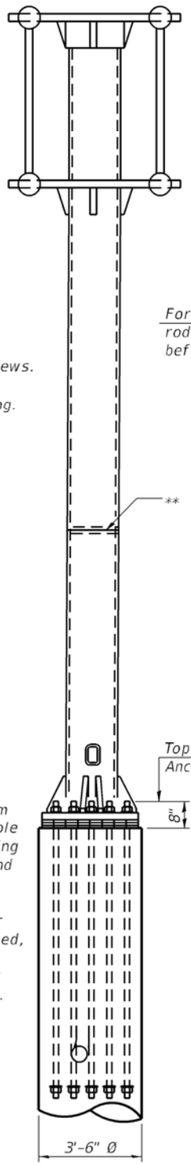

SIDE ELEVATION

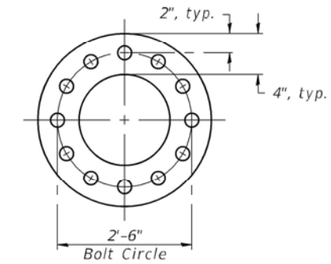

SUGGESTED POSITIONING PLATE

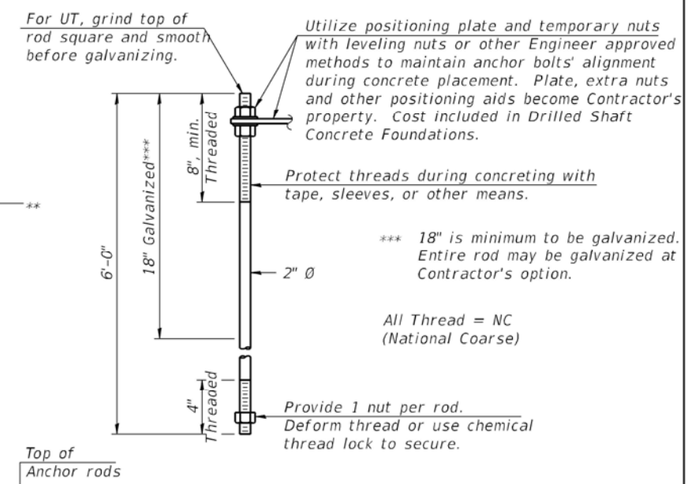

ANCHOR ROD DETAIL

Anchor rods shall conform to ASTM F1554 Grade 105. Galvanize the upper 18" (minimum***) and associated AASHTO M291, Grade A, C or DH heavy hex nuts and hardened washers per AASHTO M232. No welding shall be permitted on rods. Provide a nut at bottom, a hexagon locknut and washer above base plate and a leveling nut and washer below base plate. Nuts shall each be tightened with 200 lb.-ft. minimum torque against base plate. Before or after threading, but before galvanizing, each anchor rod shall be ultrasonically tested (UT) by a Level II or III inspector, qualified in accord with ANSI guidelines, to insure no rejectable flaws exist in the upper 18". (tension criteria). Cost of testing included in Drilled Shaft Concrete Foundations.

Structure Number	Station	H
5C0101057R237.8	630+50	21'-0"
5C0101057R238.0	638+50	20'-11¾"
5C0101074R179.8	1106+25	21'-0"

Note: "H" based on 15'-0" or actual sign height, whichever is greater.

OSC-A-5 2-17-2017

MODEL: PNP-174
FILE NAME: ...\D570C01-sht-SGN_OHDET_016_OSC-A-5.dgn

Kaskaskia Engineering Group, LLC

USER NAME = Matt Overbey	DESIGNED - MLC	REVISED -	STATE OF ILLINOIS DEPARTMENT OF TRANSPORTATION
	DRAWN - RJO	REVISED -	
PLOT SCALE = 2.0000 ' / in.	CHECKED - JW	REVISED -	
PLOT DATE = 1/25/2022 - 9:00:49 PM	DATE - JANUARY 2022	REVISED -	

CANTILEVER SIGN STRUCTURES - TYPE II-C-A & III-C-A
TRUSS SUPPORT POST - ALUMINUM TRUSS & STEEL POST

SCALE: N.T.S. | SHEET 16 OF 20 SHEETS | STA. TO STA.

F.A.I. RTE.	SECTION	COUNTY	TOTAL SHEETS	SHEET NO.
57	10-(33,34,5,14)R & (10-34)B	CHAMPAIGN	1182	811

CONTRACT NO. 70C01

ILLINOIS FED. AID PROJECT

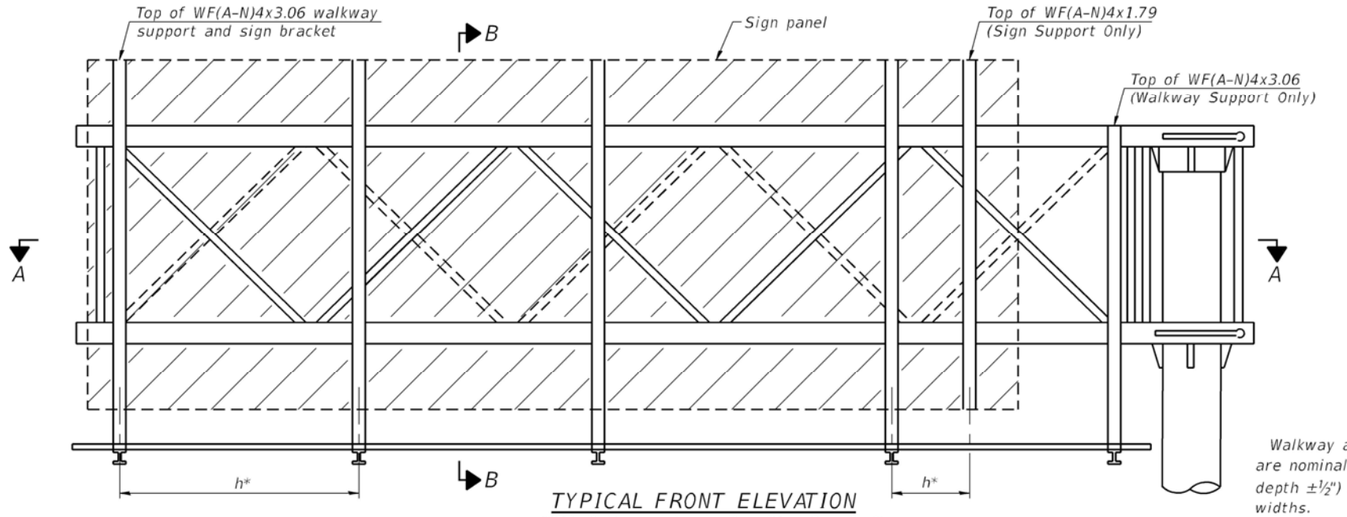

TYPICAL FRONT ELEVATION

With lights and handrail omitted for clarity.

Walkway and truss grating dimensions are nominal and may vary (width ±½", depth ±½") based on available standard widths.

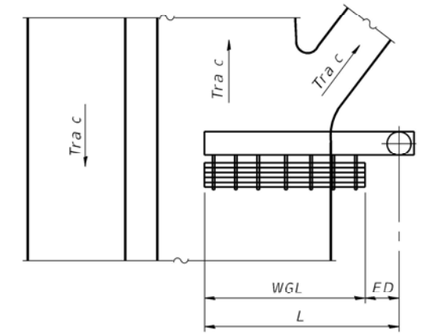

PLAN

WALKWAY AND HANDRAIL SKETCH

(Road plan beneath truss varies)

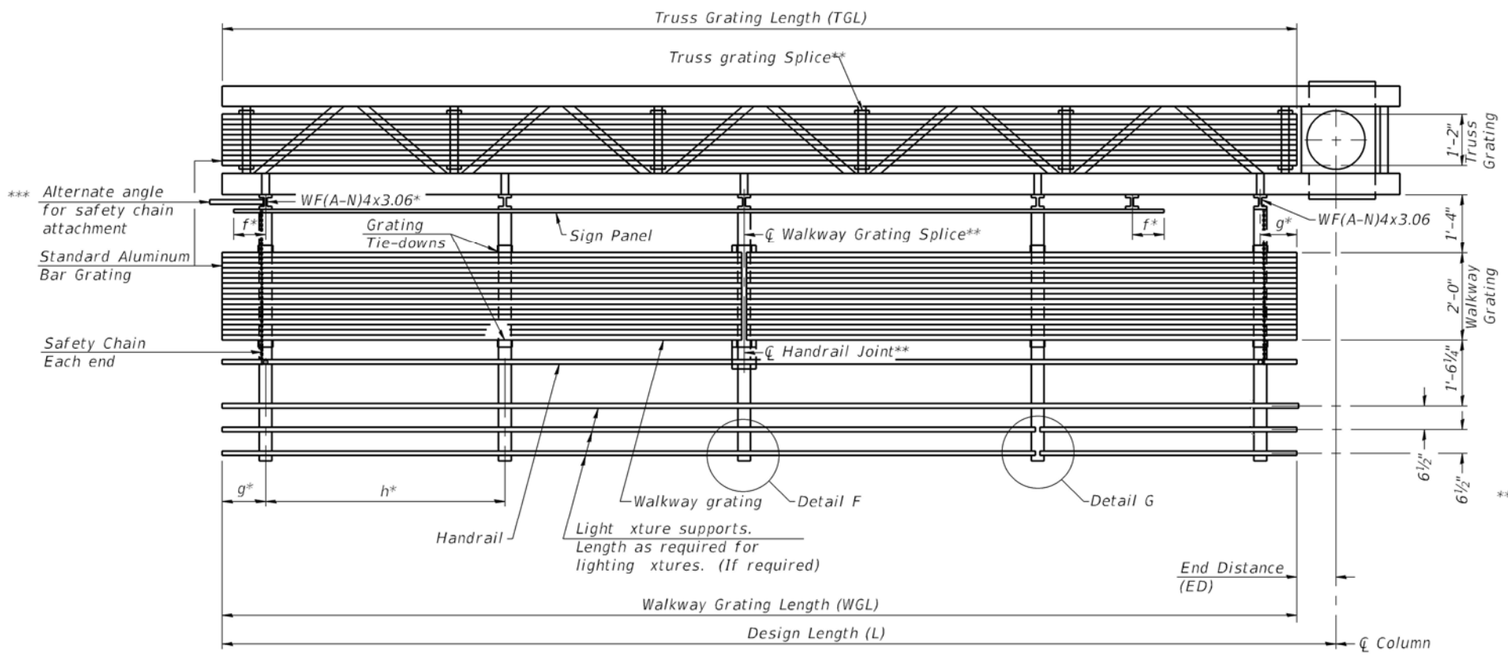

SECTION A-A

Structure Number	Station	WGL	ED	TGL
5C0101057R237.8	630+50	17'-3"	15'-3"	31'-0"
5C0101057R238.0	638+50	15'-3"	18'-1"	31'-10"
5C0101074R179.8	1106+25	17'-3"	14'-11"	30'-8"

Notes:

* Space walkway brackets WF(A-N)4x3.06 and sign brackets WF(A-N)4x1.79 for e ciency and within limits shown:

f = 12" maximum, 4" minimum (End of sign to ℄ of nearest bracket)
g = 12" maximum, 4" minimum (End of walkway to ℄ of nearest bracket)
h = 6'-0" maximum (℄ to ℄ sign and/or walkway support brackets, WF(A-N)4x1.79 or WF(A-N)4x3.06)

*** If walkway bracket at safety chain location is behind sign, add angle to bracket. See alternate safety chain attachment on base sheet OSC-A-8

For details of sign placement, sign/walkway brackets, truss and walkway gratings, grating splices and Section B-B, see Base Sheet OSC-A-7.

For details of handrail, handrail joint, safety chain and Details F and G, see Base Sheet OSC-A-8.

Truss grating to facilitate inspection shall run full length of cantilevers. Cost of truss grating is included in Overhead Sign Structure Cantilever.

Handrail and walkway grating shall span a minimum of three brackets between splices.

** Use and location of handrail joints or grating splices are optional, based on lengths needed and material availability.

$$TGL = L - \left(\frac{\text{Post O.D.}}{2} + 6''\right)$$

BRACKET TABLE

WF(A-N)4x1.79 or WF(A-N)4x3.06 ASTM B308, Alloy 6061-T6		
Sign Width		Number Brackets Required
Greater Than	Less Than or Equal To	
	8'-0"	2
8'-0"	14'-0"	3
14'-0"	20'-0"	4
20'-0"	26'-0"	5
26'-0"	32'-0"	6

OSC-A-6 2-17-2017

MODEL: PNP-174
FILE NAME: ...\D570C01-sht-SGN_OHDET_017_OSC-A-6.dgn

Kaskaskia Engineering Group, LLC

USER NAME = Matt Overbey	DESIGNED - MLC	REVISED -	STATE OF ILLINOIS DEPARTMENT OF TRANSPORTATION
	DRAWN - RJO	REVISED -	
PLOT SCALE = 2.0000 ' / in.	CHECKED - JW	REVISED -	
PLOT DATE = 1/25/2022 - 9:00:51 PM	DATE - JANUARY 2022	REVISED -	

CANTILEVER SIGN STRUCTURES – ALUMINUM WALKWAY
DETAILS – ALUMINUM TRUSS & STEEL POST

SCALE: N.T.S. | SHEET 17 OF 20 SHEETS | STA. TO STA.

F.A.I. RTE.	SECTION	COUNTY	TOTAL SHEETS	SHEET NO.
57	10-(33,34,5,14)R & (10-34)B	CHAMPAIGN	1182	812

CONTRACT NO. 70C01

ILLINOIS FED. AID PROJECT

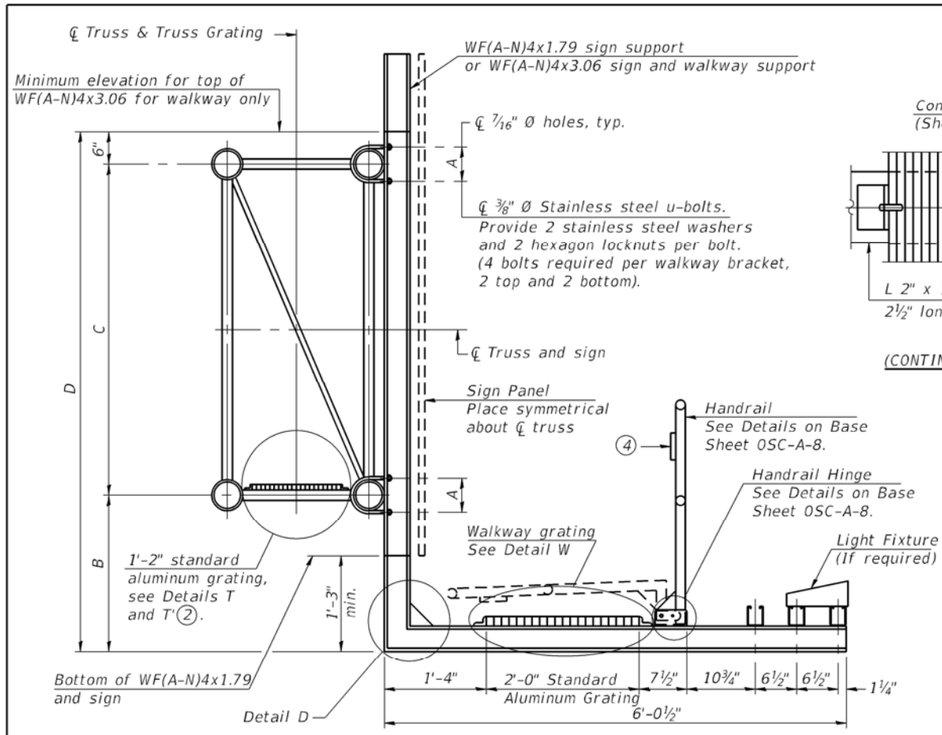

SECTION B-B

Sign shall be even with the top of the bracket, but it may extend no more than 6" above the top of the bracket for field adjustments.

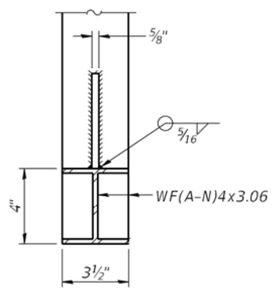

SECTION D-D

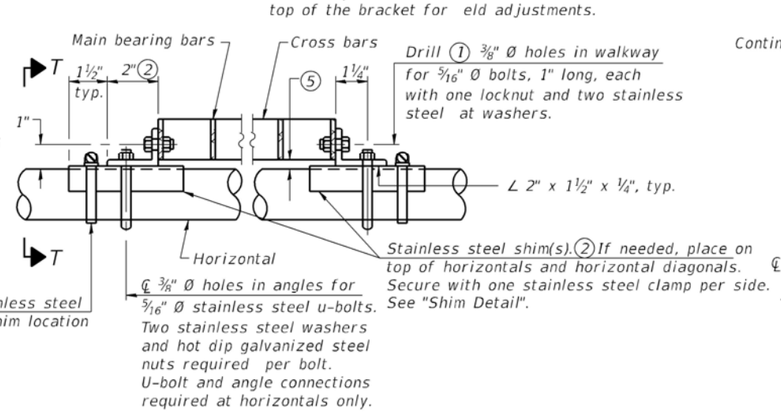

DETAIL T

(Continuous Truss grating)

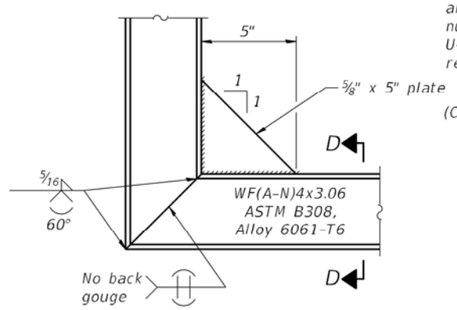

DETAIL D

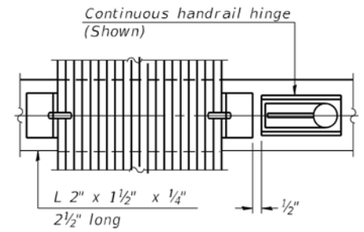

(CONTINUOUS WALKWAY GRATING)

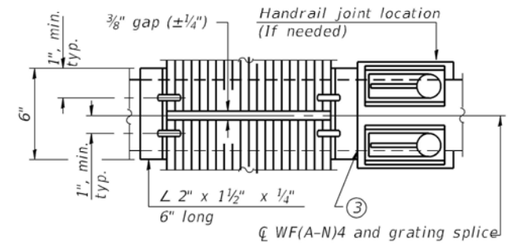

(AT WALKWAY GRATING SPLICE)

SECTION W-W

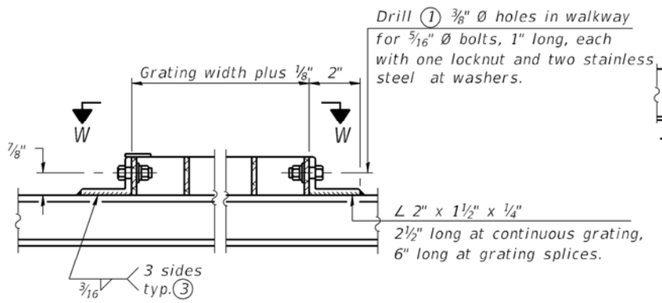

DETAIL W

(Walkway grating)

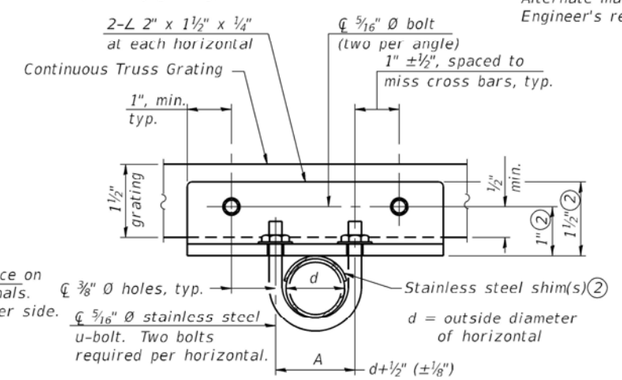

SECTION T-T

SPECIFICATIONS FOR STANDARD ALUMINUM GRATING

Aluminum Grating with modified "t" sections for main bearing bars shall meet the following requirements:

Main bars shall conform to ASTM B221 Alloy 6061-T6 and have a minimum section modulus equal to 0.0705 in.³ per bar, a depth of 1½", spaced on 1 3/16" centers.

Cross bars shall conform to ASTM B221 Alloy 6063-T5 or T-42 and spaced on 4" centers.

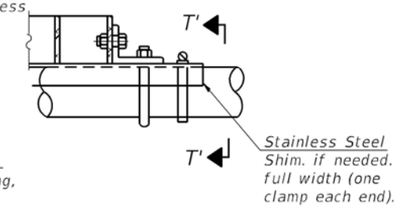

DETAIL T'

(Truss grating splice)

Details not shown same as Detail T. Alternate materials may be used subject to the Engineer's review and approval.

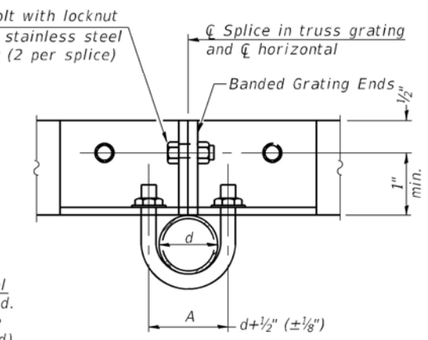

SECTION T'-T'

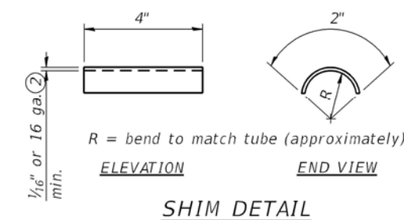

SHIM DETAIL

(1) Drilling holes in grating may be done in shop or field, based on Contractor's preference and subject to accurate alignment.

(2) Stainless steel shims shall be placed as shown in Detail T if needed to compensate for alignment variations between horizontal and diagonal pipes beyond adjustment provided by angles. Thicker shims may be used subject to shims performing properly.

(3) If Handrail Joint present, weld angle to WF(A-N)4 and ¼" extension bars. (See Base Sheet OSC-A-8.)

(4) PL 1/8" x ½" x 2" welded to handrail posts to protect locations that contact grating.

(5) Tube to grating gap may vary from 0 to ½", max. to align walkway, allow for camber, etc.

(6) Based on actual sign height, Ds, given on OSC-A-1.

Structure Number	Station	A	(6) B	C	(6) D
5C0101057R237.8	630+50	7½"	5'-3"	7'-0"	12'-9"
5C0101057R238.0	638+50	7½"	5'-3"	7'-0"	12'-9"
5C0101074R179.8	1106+25	7½"	5'-3"	7'-0"	12'-9"

OSC-A-7 2-17-2017

MODEL: PNP-174
FILE NAME: ...\0570C01-sht-SGN_OHDET_018_OSC-A-7.dgn

Kaskaskia Engineering Group, LLC

USER NAME = Matt Overbey	DESIGNED - MLC	REVISED -	
	DRAWN - RJO	REVISED -	
PLOT SCALE = 2.0000 ' / in.	CHECKED - JW	REVISED -	
PLOT DATE = 1/25/2022 - 9:00:54 PM	DATE - JANUARY 2022	REVISED -	

STATE OF ILLINOIS
DEPARTMENT OF TRANSPORTATION

CANTILEVER SIGN STRUCTURES - WALKWAY DETAILS
ALUMINUM TRUSS & STEEL POST

SCALE: N.T.S. | SHEET 18 OF 20 SHEETS | STA. TO STA.

F.A.I. RTE.	SECTION	COUNTY	TOTAL SHEETS	SHEET NO.
57	10-(33,34,5,14)R & (10-34)B	CHAMPAIGN	1182	813

CONTRACT NO. 70C01

ILLINOIS FED. AID PROJECT

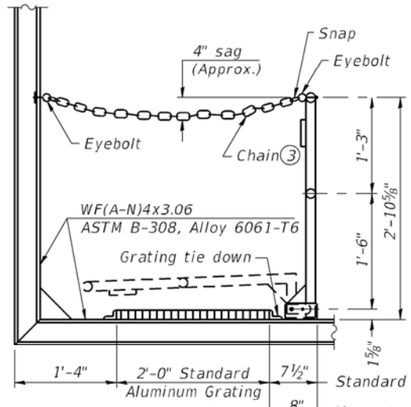

SIDE ELEVATION

(Showing Safety Chain W/O Sign)

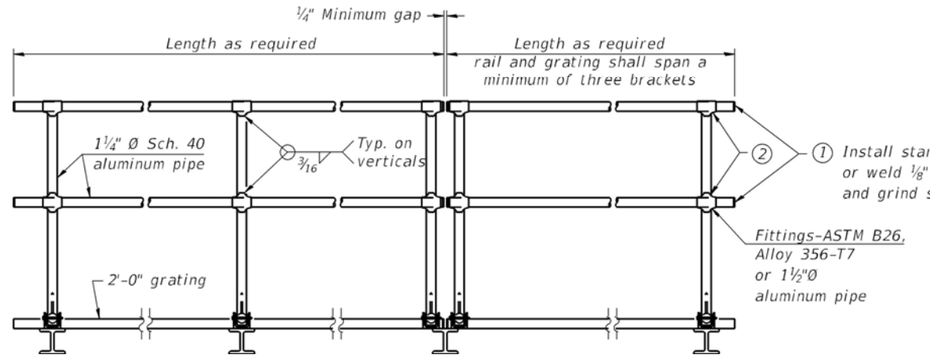

FRONT ELEVATION

② Horizontal handrail member shall be continuous thru tting. Provide 7/16" Ø hole in tting for ⅜" Ø bolt. Field drill 7/16" Ø hole in horizontal rail member. Provide locknut and two stainless steel washers for bolt. (Use 5/16" eyebolts in 7/16" Ø holes on top rail at ends only.)

HANDRAIL DETAILS

Handrail pipe shall be ASTM B241 or B429, Alloy 6063-T6 or Alloy 6061-T6.

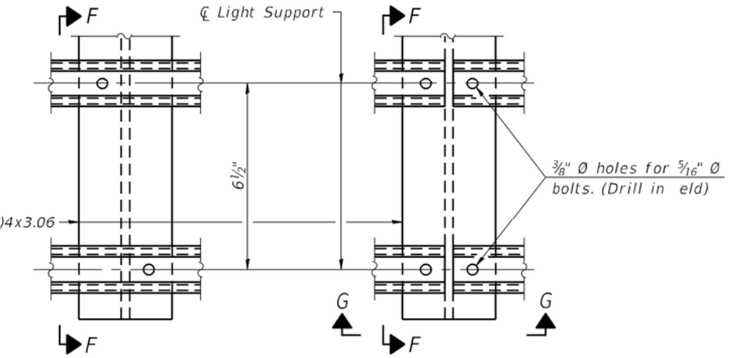

DETAIL F

DETAIL G

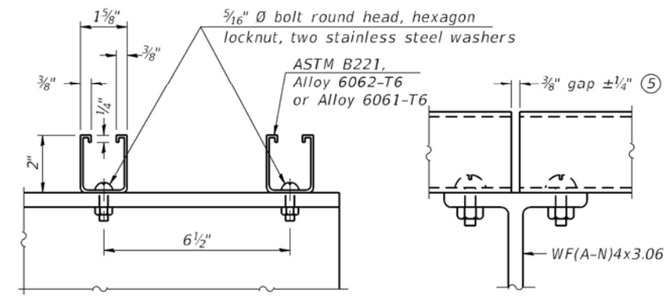

SECTION F-F

SECTION G-G

LIGHTING FIXTURE MOUNTS (IF REQUIRED)

⑤ Field cut ends of light support channels shall be free of burrs or hazardous projections and coated with zinc-rich primer or equivalent.

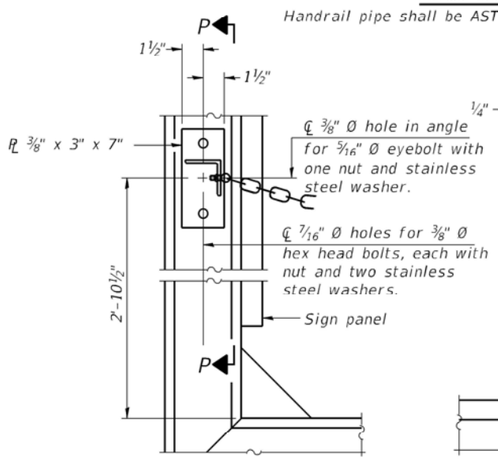

ALTERNATE SAFETY CHAIN ATTACHMENT

(With Sign Present)

Items not shown same as "Side Elevation" of "Handrail Details"

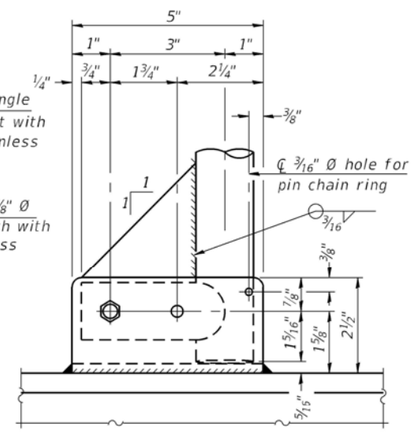

SIDE ELEVATION

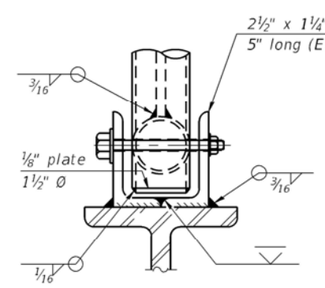

FRONT ELEVATION

Details not shown same as "ELEVATION" at right.

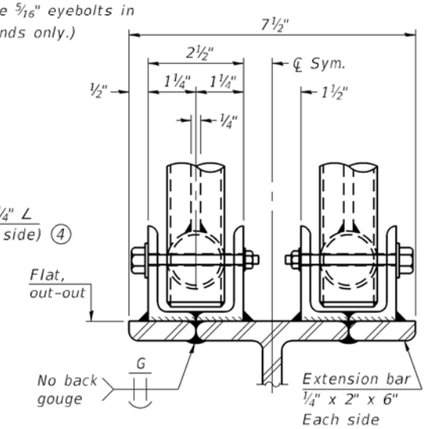

ELEVATION AT HANDRAIL JOINT ④

Details not shown same as "FRONT ELEVATION"

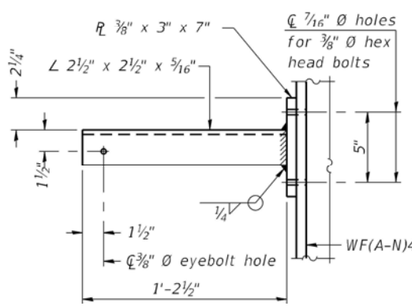

SECTION P-P

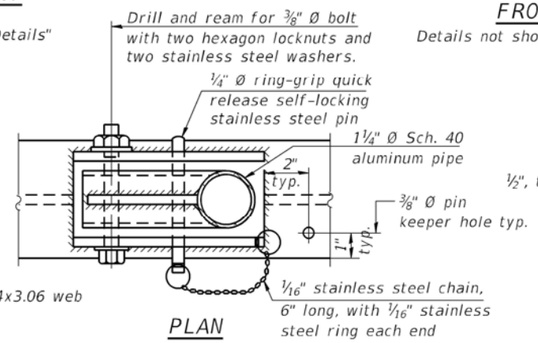

PLAN

DETAIL E HANDRAIL HINGE

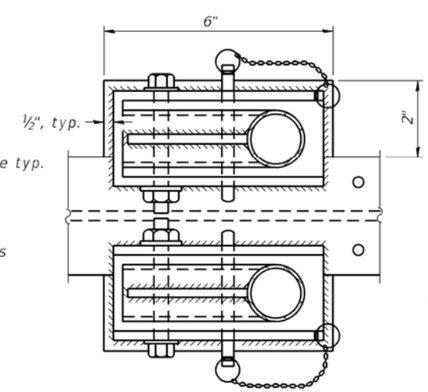

PLAN AT HANDRAIL JOINT

Details not shown same as "PLAN"

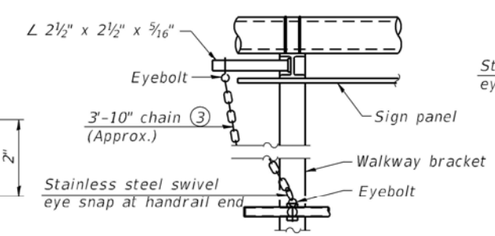

ALTERNATE SAFETY CHAIN ATTACHMENT

Details not shown similar to "Safety Chain" Details

(Walkway omitted for clarity)

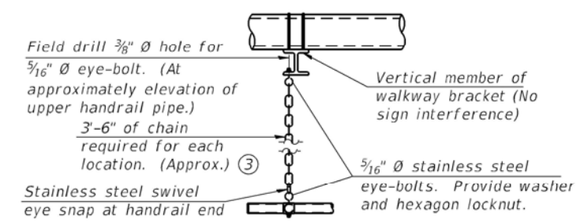

SAFETY CHAIN

One required for each end of each walkway.

③ 3/16" Type 304L stainless steel chain, approximately 12 links per foot.

④ Extrusions may be used in lieu of the details shown, with approval of the Engineer.

OSC-A-8 2-17-2017

MODEL: PNP-174
FILE NAME: ...\D570C01-sht-SGN_OHDET_019_OSC-A-8.dgn

Kaskaskia Engineering Group, LLC	USER NAME = Matt Overbey	DESIGNED - MLC	REVISED -	STATE OF ILLINOIS DEPARTMENT OF TRANSPORTATION	CANTILEVER SIGN STRUCTURES – HANDRAIL DETAILS ALUMINUM TRUSS & STEEL POST
		DRAWN - RJO	REVISED -		
	PLOT SCALE = 2.0000 ' / in.	CHECKED - JW	REVISED -		
	PLOT DATE = 1/25/2022 - 9:00:57 PM	DATE - JANUARY 2022	REVISED -		SCALE: N.T.S. SHEET 19 OF 20 SHEETS STA. TO STA.

F.A.I. RTE.	SECTION	COUNTY	TOTAL SHEETS	SHEET NO.
57	10-(33,34,5,14)R & (10-34)B	CHAMPAIGN	1182	814
		CONTRACT NO. 70C01		
		ILLINOIS FED. AID PROJECT		

* Grind anchor rod to bright nish at ground clamp location before installing clamp.

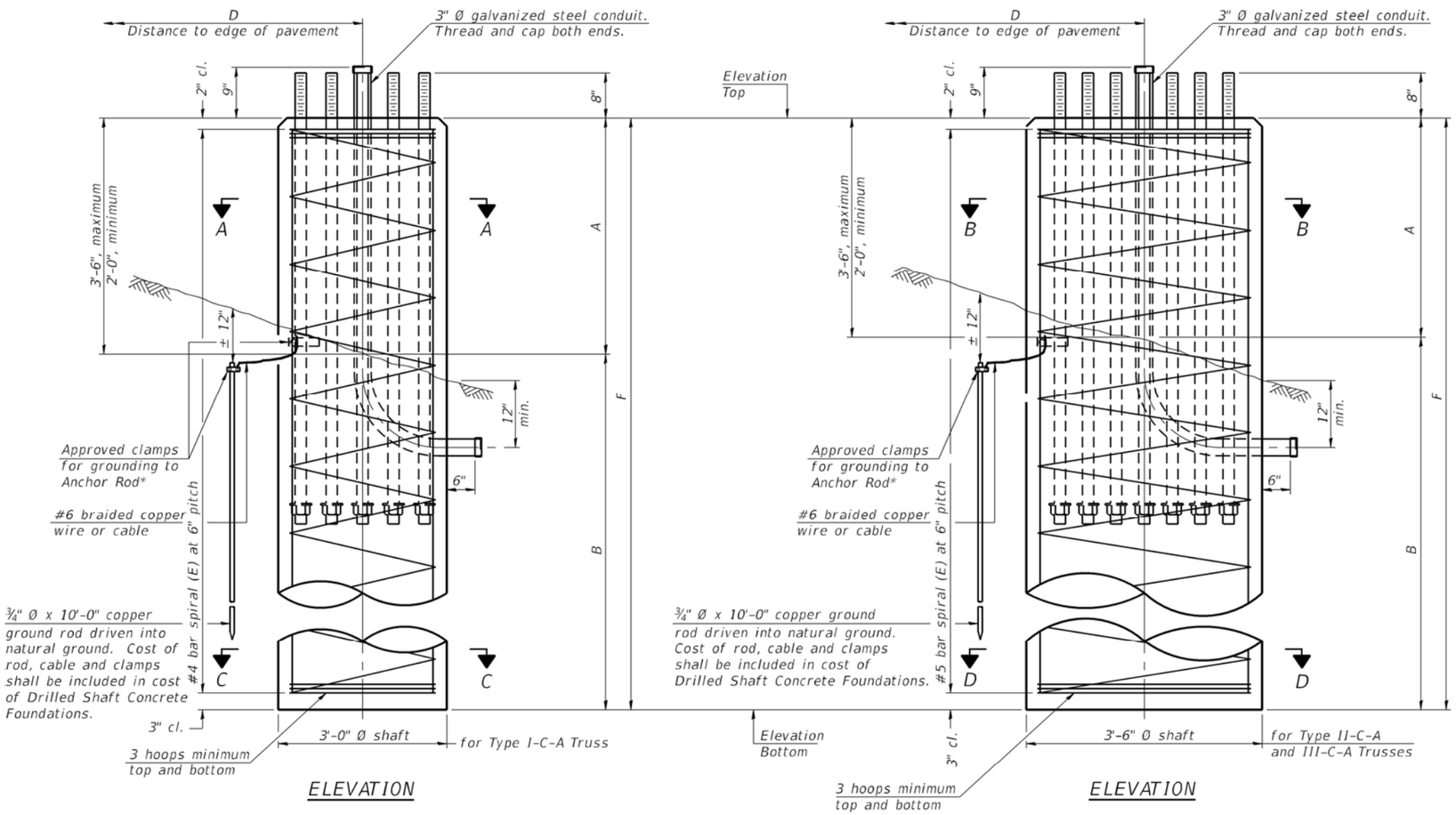

ELEVATION

ELEVATION

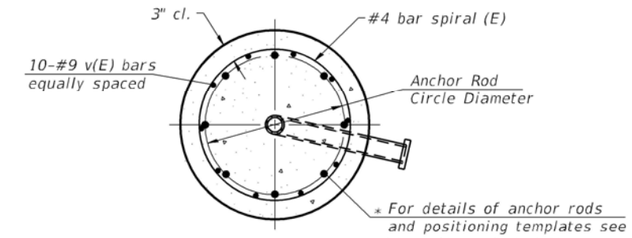

SECTION A-A

3'-0" Ø shaft

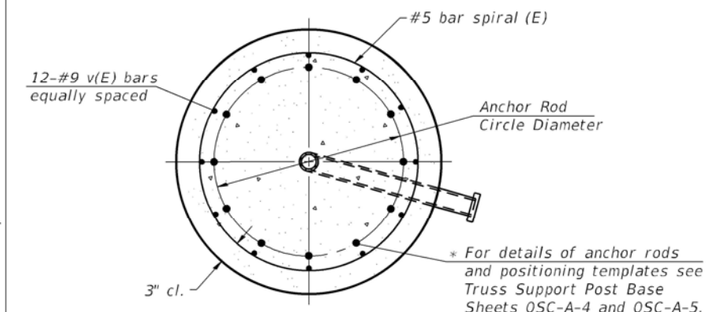

SECTION B-B

3'-6" Ø shaft

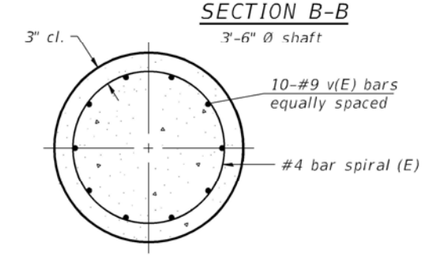

SECTION C-C

3'-0" Ø shaft

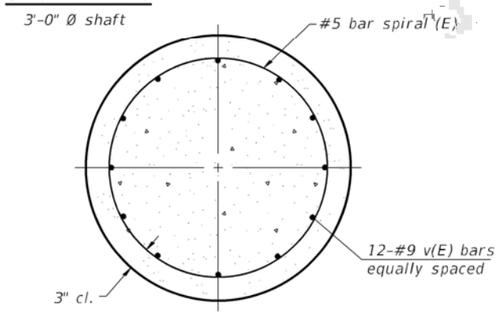

SECTION D-D

3'-6" Ø shaft

NOTES:

The foundation dimensions shown in the Foundation Design Table are based on the presence of mostly cohesive soils with an average Uncon ned Compressive Strength (Qu) of at least 1.25 tsf, which must be determined by previous soil investigations at the jobsite. When other conditions are indicated, the boring data will be included in the plans and the foundation dimensions shown in the Foundation Data Table will be the result of site speci c designs.

If the conditions encountered are di erent than those indicated, the Contractor shall notify the Engineer to determine if the foundation dimensions need to be modi ed. If dimensions "B" or "F" are revised by more than 12" by the Contractor, "as-built" plans shall be prepared and submitted to the District Bureau of Operations for future reference.

No sonotubes or decomposable forms shall be used below the lower conduit entrance. Permanent metal forms or other shielding may not be left in place below that elevation without the Engineer's written permission.

Concrete shall be placed monolithically, without construction joints.

Back ll shall be placed per Article 502 of Standard Speci cation and prior to erection of support column.

A normal surface nish followed by a Concrete Sealer application will be required on concrete surfaces above the lowest elevation 6" below nished ground line. Cost included in "Drilled Shaft Concrete Foundation".

FOUNDATION DESIGN TABLE

Truss Type	Post Base Sheet	Maximum Cantilever Length (ft)	Maximum Total Sign Area (sq ft)	Shaft Diameter (in)	"B" Depth (ft)	Anchor Rods No.	Anchor Rods Diameter (in)	Anchor Rod Circle Diameter (in)
I-C-A	OSC-A-4	25	170	3.0	16.0	8	2	22
II-C-A	OSC-A-5	30	170	3.5	17.0	12	2	30
II-C-A	OSC-A-5	30	340	3.5	21.5	12	2	30
III-C-A	OSC-A-5	35	170	3.5	19.0	12	2	30
III-C-A	OSC-A-5	35	250	3.5	22.5	12	2	30
III-C-A	OSC-A-5	35	400	3.5	26.5	12	2	30
III-C-A	OSC-A-5	40	400	3.5	32.0	12	2	30

FOUNDATION DATA TABLE

Structure Number	Station	Truss Type	Shaft Diameter	Elevation Top	Elevation Bottom	Qu	A	B	F	Class DS Concrete Cubic Yards
5C0101057R237.8	630+50	III-C-A	3'-6"	774.71	752.21	2.6 tsf	3'-6"	19'-0"	22'-6"	8.1
5C0101057R238.0	638+50	III-C-A	3'-6"	774.43	752.10	4.5 tsf	3'-4"	19'-0"	22'-4"	8.0
5C0101074R179.8	1106+25	III-C-A	3'-6"	766.33	743.95	2.5 tsf	3'-4½"	19'-0"	22'-4½"	8.0

OSC-A-9 2-17-2017

MODEL: PNP-174
FILE NAME: ...\0570C01-sht-SGN_OHDET_020_OSC-A-9.dgn

Kaskaskia Engineering Group, LLC

USER NAME = Matt Overbey	DESIGNED - MLC	REVISED -	
	DRAWN - RJO	REVISED -	
PLOT SCALE = 2.0000 ' / in.	CHECKED - JW	REVISED -	
PLOT DATE = 1/25/2022 - 9:01:00 PM	DATE - JANUARY 2022	REVISED -	

STATE OF ILLINOIS
DEPARTMENT OF TRANSPORTATION

CANTILEVER SIGN STRUCTURES – DRILLED SHAFT
ALUMINUM TRUSS & STEEL POST

SCALE: N.T.S. | SHEET 20 OF 20 SHEETS | STA. TO STA.

F.A.I. RTE.	SECTION	COUNTY	TOTAL SHEETS	SHEET NO.
57	10-(33,34,5,14)R & (10-34)B	CHAMPAIGN	1182	815

CONTRACT NO. 70C01

ILLINOIS FED. AID PROJECT

STA. 583+40, RT
I-57 NB

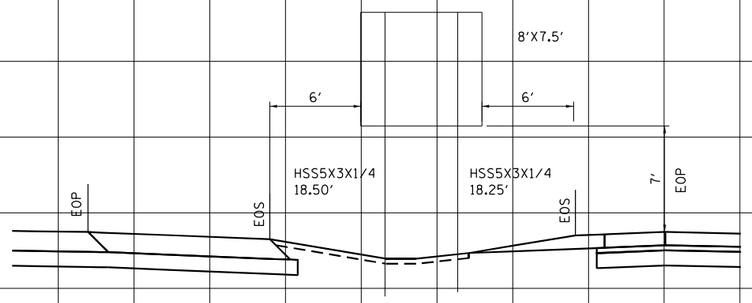

STA. 635+75, RT
I-57 NB

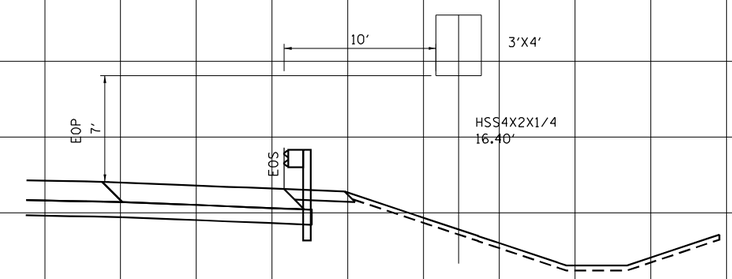

STA. 573+50, RT
I-57 NB

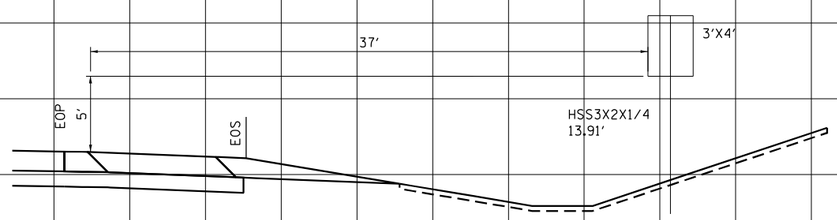

STA. 643+30, RT
I-57 NB

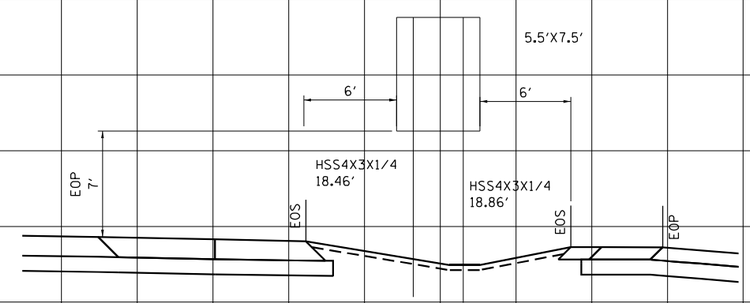

SCALE 5' 5'

FINAL SURVEY	BY	DATE
SURVEYED		
PLOTTED		
TEMPLATE		
AREAS		
AREAS CHECKED		
NOTE BOOK NO.		

ORIGINAL SURVEY	BY	DATE
SURVEYED		
PLOTTED		
TEMPLATE		
AREAS		
AREAS CHECKED		
NOTE BOOK NO.		

FILE NAME =
...\D570C01-sht-XSC Signs Ground.dgn

USER NAME = Matt Overbey	DESIGNED - MRS	REVISED -	
	DRAWN - MRS	REVISED -	
PLOT SCALE = 10.0000 ' / in.	CHECKED - MJO	REVISED -	
PLOT DATE = 1/27/2022 - 10:47:46 PM	DATE - JANUARY 2022	REVISED -	

STATE OF ILLINOIS
DEPARTMENT OF TRANSPORTATION

GROUND MOUNT SIGN CROSS SECTIONS

SCALE: 1'V : 1'H | SHEET NO. 1 OF 5 SHEETS | STA. TO STA.

F.A.U. RTE.	SECTION	COUNTY	TOTAL SHEETS	SHEET NO.
57	10-(33,34,5,14)R & (10-34)B	CHAMPAIGN	1182	816
		CONTRACT NO. 70C01		
FED. ROAD DIST. NO.	ILLINOIS	FED. AID PROJECT		

STA. 615+75, LT
I-57 SB

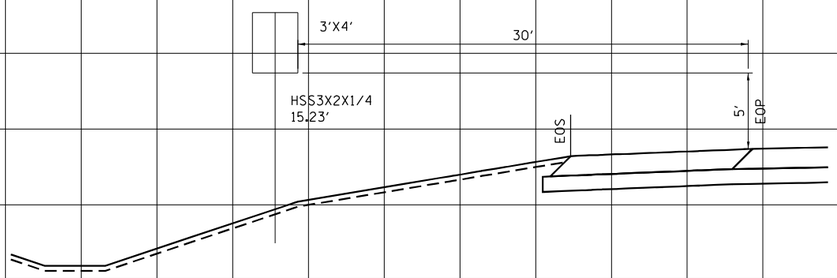

STA. 642+85, LT
I-57 SB

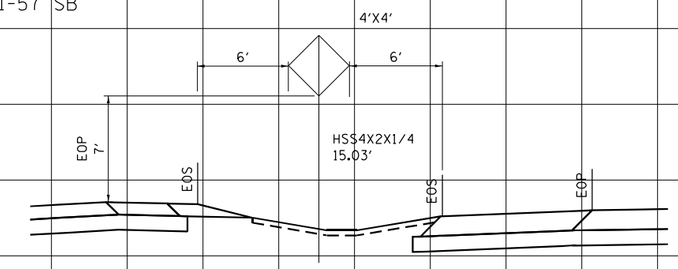

FINAL SURVEY		BY	DATE
NOTE BOOK	SURVEYED		
	PLOTTED		
	TEMPLATE		
	AREAS		
	AREAS CHECKED		
NO.			

ORIGINAL SURVEY		BY	DATE
NOTE BOOK	SURVEYED		
	PLOTTED		
	TEMPLATE		
	AREAS		
	AREAS CHECKED		
NO.			

SCALE 5' 5'

FILE NAME = ...\D570C01-sht-XSC Signs Ground.dgn	USER NAME = Matt Overbey	DESIGNED - MRS	REVISED -
		DRAWN - MRS	REVISED -
	PLOT SCALE = 10.0000 ' / in.	CHECKED - MJO	REVISED -
	PLOT DATE = 1/27/2022 - 10:47:46 PM	DATE - JANUARY 2022	REVISED -

STATE OF ILLINOIS
DEPARTMENT OF TRANSPORTATION

GROUND MOUNT SIGN CROSS SECTIONS

SCALE: 1'V : 1'H | SHEET NO. 2 OF 5 SHEETS | STA. TO STA.

F.A.U. RTE.	SECTION	COUNTY	TOTAL SHEETS	SHEET NO.
57	10-(33,34,5,14)R & (10-34)B	CHAMPAIGN	1182	817
		CONTRACT NO. 70C01		
FED. ROAD DIST. NO.	ILLINOIS	FED. AID PROJECT		

STA. 1860+50, LT
I-74 WB

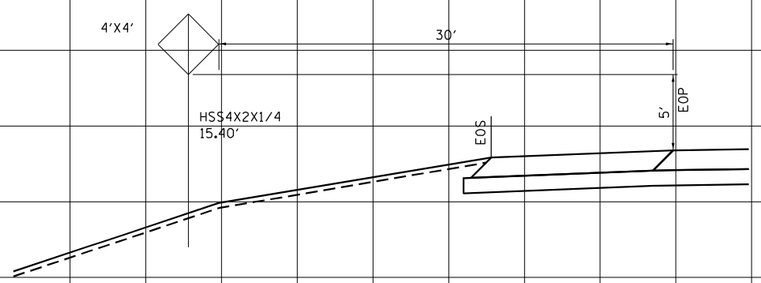

STA. 1051+75, LT
I-74 WB

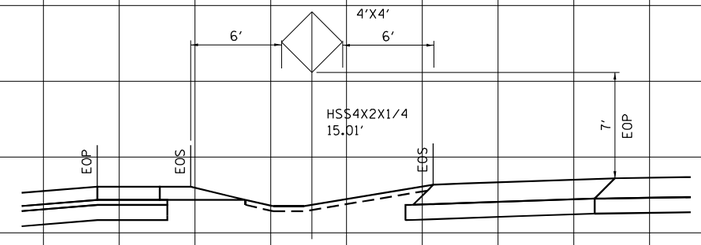

STA. 1138+10, LT
I-74 WB

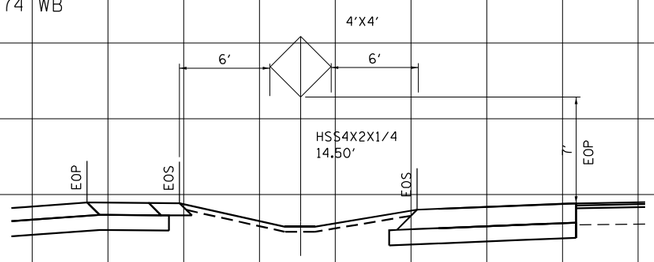

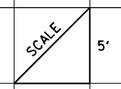

FINAL SURVEY	BY	DATE
SURVEYED		
PLOTTED		
TEMPLATE		
AREAS		
AREAS CHECKED		
NOTE BOOK		
NO.		

ORIGINAL SURVEY	BY	DATE
SURVEYED		
PLOTTED		
TEMPLATE		
AREAS		
AREAS CHECKED		
NOTE BOOK		
NO.		

FILE NAME =
...\D570C01-sht-XSC Signs Ground.dgn

USER NAME = Matt Overbey	DESIGNED - MRS	REVISED -	
	DRAWN - MRS	REVISED -	
PLOT SCALE = 10.0000 ' / in.	CHECKED - MJO	REVISED -	
PLOT DATE = 1/27/2022 - 10:47:47 PM	DATE - JANUARY 2022	REVISED -	

STATE OF ILLINOIS
DEPARTMENT OF TRANSPORTATION

GROUND MOUNT SIGN CROSS SECTIONS

SCALE: 1'V : 1'H | SHEET NO. 4 OF 5 SHEETS | STA. TO STA.

F.A.U. RTE.	SECTION	COUNTY	TOTAL SHEETS	SHEET NO.
57	10-(33,34,5,14)R & (10-34)B	CHAMPAIGN	1182	819
		CONTRACT NO. 70C01		
FED. ROAD DIST. NO.	ILLINOIS	FED. AID PROJECT		

STA. 1071+30, RT
I-74 EB

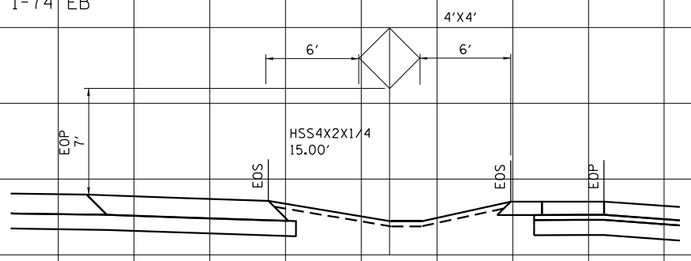

STA. 1129+30, RT
I-74 EB

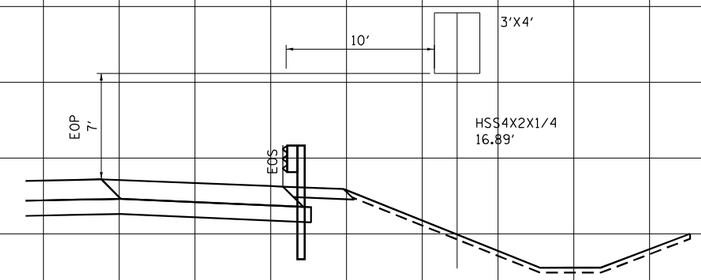

FINAL SURVEY		BY	DATE
NOTE BOOK	SURVEYED		
	PLOTTED		
	TEMPLATE		
	AREAS		
	AREAS CHECKED		
NO.			

ORIGINAL SURVEY		BY	DATE
NOTE BOOK	SURVEYED		
	PLOTTED		
	TEMPLATE		
	AREAS		
	AREAS CHECKED		
NO.			

SCALE 5' 5'

FILE NAME = ...\D570C01-sht-XSC Signs Ground.dgn	USER NAME = Matt Overbey	DESIGNED - MRS	REVISED -
		DRAWN - MRS	REVISED -
	PLOT SCALE = 10.0000 ' / in.	CHECKED - MJO	REVISED -
	PLOT DATE = 1/27/2022 - 10:47:47 PM	DATE - JANUARY 2022	REVISED -

STATE OF ILLINOIS
DEPARTMENT OF TRANSPORTATION

GROUND MOUNT SIGN CROSS SECTIONS

SCALE: 1'V : 1'H | SHEET NO. 3 OF 5 SHEETS | STA. TO STA.

F.A.U. RTE.	SECTION	COUNTY	TOTAL SHEETS	SHEET NO.
57	10-(33,34,5,14)R & (10-34)B	CHAMPAIGN	1182	818
		CONTRACT NO. 70C01		
FED. ROAD DIST. NO.	ILLINOIS	FED. AID PROJECT		

STA. 15+50, RT
OLYMPIAN RAMP B

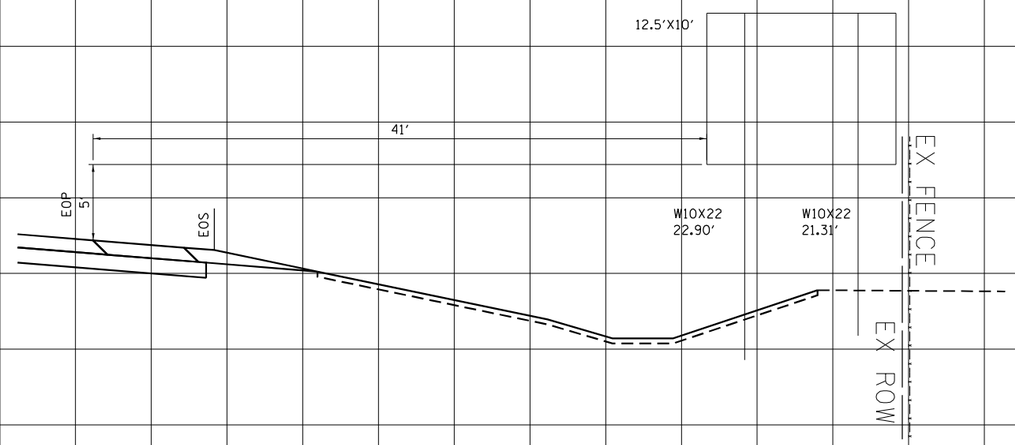

STA. 17+50, RT
OLYMPIAN RAMP B

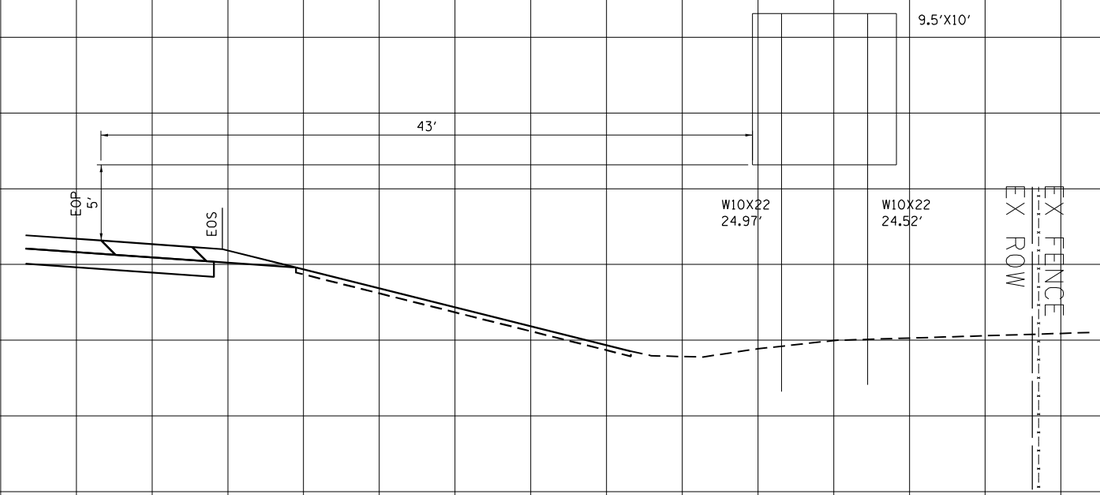

SCALE 5' 5'

FINAL SURVEY	BY	DATE
SURVEYED		
PLOTTED		
TEMPLATE		
AREAS		
AREAS CHECKED		
NOTE BOOK NO.		

ORIGINAL SURVEY	BY	DATE
SURVEYED		
PLOTTED		
TEMPLATE		
AREAS		
AREAS CHECKED		
NOTE BOOK NO.		

FILE NAME = ...\D570C01-sht-XSC Signs Ground.dgn	USER NAME = Matt Overbey	DESIGNED - MRS	REVISED -
		DRAWN - MRS	REVISED -
	PLOT SCALE = 10.0000 ' / in.	CHECKED - MJO	REVISED -
	PLOT DATE = 1/27/2022 - 10:47:47 PM	DATE - JANUARY 2022	REVISED -

STATE OF ILLINOIS
DEPARTMENT OF TRANSPORTATION

GROUND MOUNT SIGN CROSS SECTIONS

SCALE: 1'V : 1'H | SHEET NO. 5 OF 5 SHEETS | STA. TO STA.

F.A.U. RTE.	SECTION	COUNTY	TOTAL SHEETS	SHEET NO.
57	10-(33,34,5,14)R & (10-34)B	CHAMPAIGN	1182	820
		CONTRACT NO. 70C01		
FED. ROAD DIST. NO.	ILLINOIS	FED. AID PROJECT		

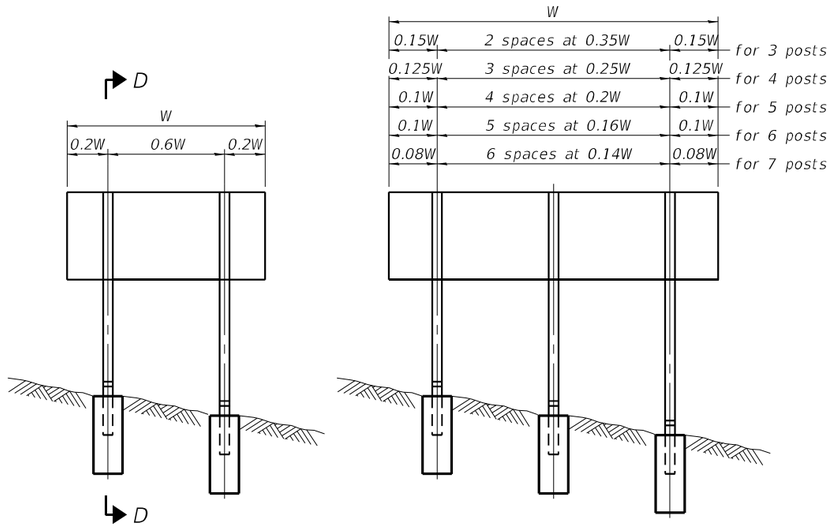

ELEVATION

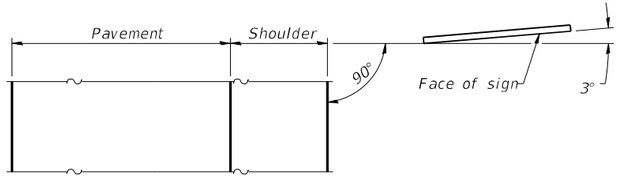

LOCATION SKETCH

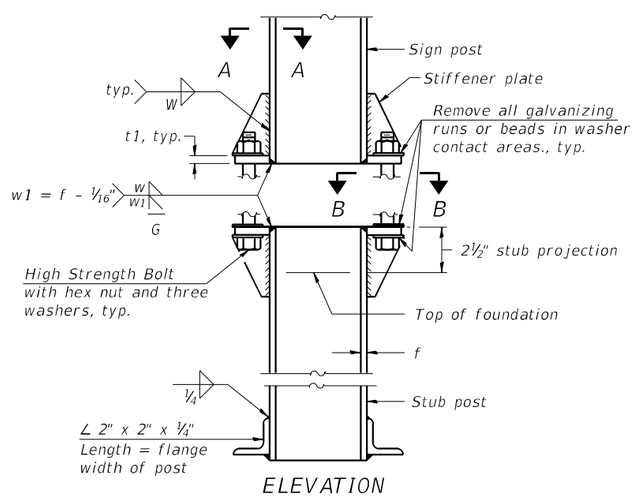

ELEVATION
SIGN POST & STUB POST

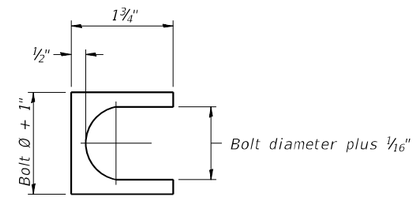

SHIM DETAIL

Furnish two 0.01" thick and two 0.03" thick stainless steel or brass (ASTM B36) shims per post.

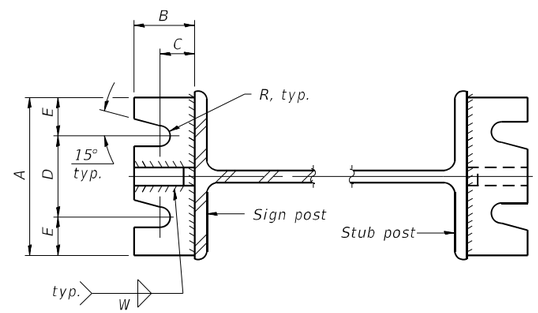

SECTION A-A

SECTION B-B

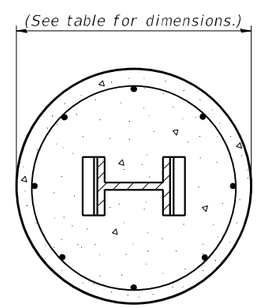

SECTION C-C

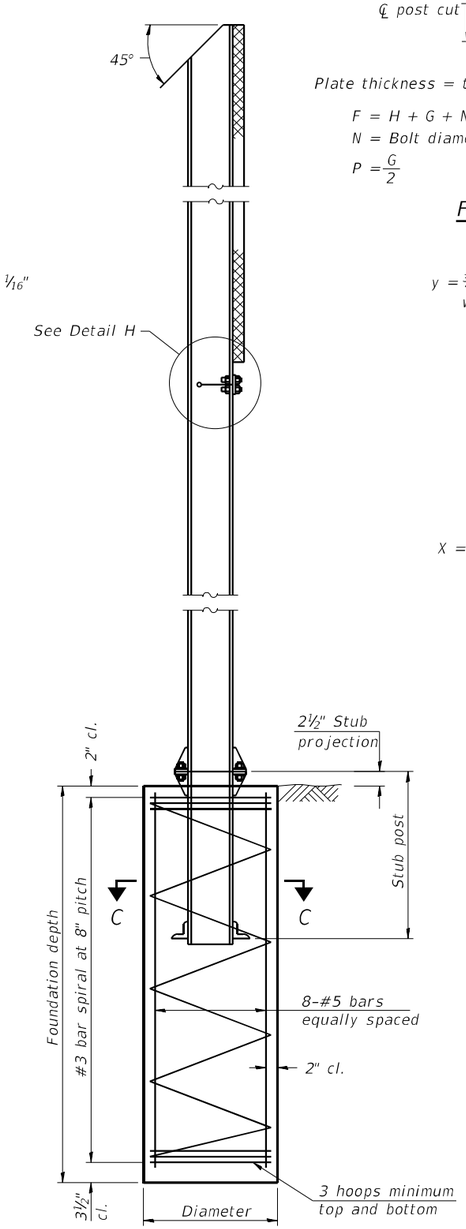

SECTION D-D

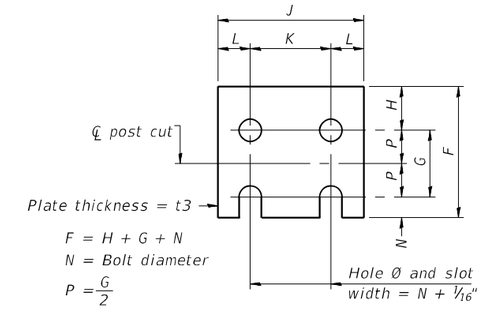

FUSE PLATE DETAIL
(Install with notches down.)

FUSE PLATE DATA		
N = Bolt Diameter	G	H
½"	2"	1⅛"
⅝"	2¼"	1¼"
¾"	2½"	1⅜"
⅞"	2¾"	1½"
1"	3"	1⅝"
1⅛"	3¼"	1¾"
1¼"	3½"	1⅞"

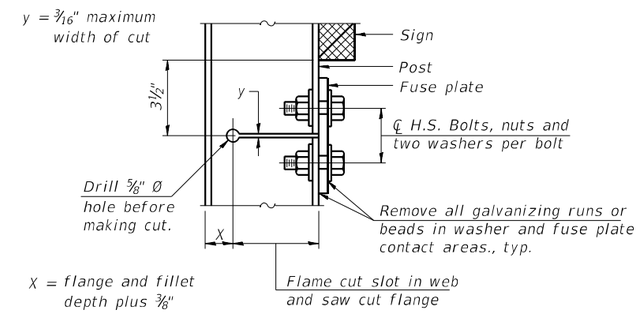

DETAIL H

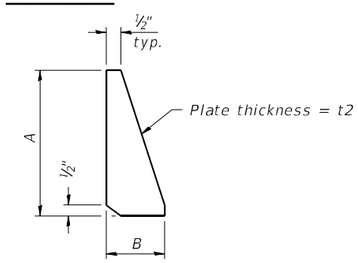

STIFFENER PLATE DETAIL
Diameter

GENERAL NOTES

Posts shall be plumbed by using shims with post-to-stub post connection bolts snug tight only. Final tightening of all High Strength Bolts shall be in accordance with Article 727.05 and threads at the junction of the bolt and nut shall be burred or center punched to prevent the nut from loosening.

LOADING: 80 m.p.h. wind with 30% gust factor, normal to sign.

DESIGN STRESSES:
Structural steel - 20,000 p.s.i.
Reinforcing steel - 20,000 p.s.i.
Concrete - 1,400 p.s.i.
Footing soil pressure - 2,000 p.s.f.

After fabrication, the post, fuse plate and upper 6", min. of the stub post shall be hot-dip galvanized in accordance with AASHTO M111. All bolts, nuts and washers shall be hot-dip galvanized in accordance with AASHTO M232.

Work this sheet with Base Sheet BAW-A-2.

BAW-A-1 2-17-2017

(Sheet 1 of 2)

MODEL: PNP-174
FILE NAME: ...\D570C01-sht-SGN_BAW-A-1.dgn

USER NAME = Matt Overbey	DESIGNED -	REVISED -	STATE OF ILLINOIS DEPARTMENT OF TRANSPORTATION
	DRAWN -	REVISED -	
PLOT SCALE = 2.0000 ' / in.	CHECKED -	REVISED -	
PLOT DATE = 1/27/2022 - 10:16:47 PM	DATE - JANUARY 2022	REVISED -	

BREAK-AWAY WIDE FLANGE STEEL SIGN POST DETAILS

SCALE: SHEET OF SHEETS STA. TO STA.

F.A.I. RTE.	SECTION	COUNTY	TOTAL SHEETS	SHEET NO.
57	10-(33,34,5,14)R & (10-34)B	CHAMPAIGN	1182	821

CONTRACT NO. 70C01

ILLINOIS FED. AID PROJECT

POST	CONCRETE FOUNDATION TABLE								POST TO STUB POST CONNECTION DATA										FUSE PLATE DATA			
	Foundation			Reinforcement				Stub Post														
	Diameter	* Minimum Depth	Concrete (1) cu. yds.)	Vertical Bars Length	Bar Spirals Diameter	Bar Spirals Length	lbs. (2)	Length	Bolt Size	A	B	C	D	E	t1	t2	R	W	J	K	L	t3
W6x9	2'-0"	6'-0"	0.70	5'-9"	1'-8½"	79'-0"	78	2'-3"	⅝" x 3¼"	6"	2¼"	1¼"	3½"	1¼"	¾"	½"	11/32"	¼"	4"	2¼"	⅞"	¼"
W6x15	2'-0"	6'-0"	0.70	5'-9"	1'-8½"	79'-0"	78	2'-6"	⅝" x 3¼"	6"	2¼"	1¼"	3½"	1¼"	¾"	½"	11/32"	¼"	6"	3½"	1¼"	⅜"
W8x18	2'-0"	6'-0"	0.70	5'-9"	1'-8½"	79'-0"	78	2'-6"	¾" x 3¾"	6"	2½"	1⅜"	3¼"	1⅜"	1"	½"	13/32"	5/16"	5¼"	2¾"	1¼"	⅜"
W10x22	2'-6"	6'-6"	1.18	6'-3"	2'-2½"	105'-0"	92	3'-0"	¾" x 3¾"	6"	2½"	1⅜"	3¼"	1⅜"	1"	½"	13/32"	5/16"	5¾"	2¾"	1½"	½"
W10x26	2'-6"	7'-0"	1.27	6'-9"	2'-2½"	112'-0"	98	3'-0"	⅞" x 4"	7"	2¾"	1½"	4"	1½"	1"	¾"	15/32"	⅜"	5¾"	2¾"	1½"	⅝"
W12x26	2'-6"	7'-9"	1.41	7'-6"	2'-2½"	119'-0"	107	3'-0"	⅞" x 4"	7"	2¾"	1½"	4"	1½"	1"	¾"	15/32"	⅜"	6½"	3½"	1½"	⅝"
W14x30	3'-0"	7'-3"	1.90	7'-0"	2'-8½"	145'-0"	113	3'-0"	⅞" x 4"	7"	2¾"	1½"	4"	1½"	1"	¾"	15/32"	⅜"	6¾"	3½"	1⅝"	½"
W14x38	3'-0"	8'-0"	2.09	7'-9"	2'-8½"	153'-0"	122	3'-6"	1" x 4½"	7½"	3"	1¾"	4"	1¾"	1¼"	¾"	17/32"	⅜"	6¾"	3½"	1⅝"	½"
W16x45	3'-0"	8'-6"	2.23	8'-3"	2'-8½"	162'-0"	130	3'-6"	1" x 4½"	7½"	3"	1¾"	4"	1¾"	1¼"	¾"	17/32"	⅜"	7"	3½"	1¾"	½"

*Dimensional changes required for varying site conditions shall be approved by the Engineer.

POST	FUSE PLATE BOLT SIZE																				
	Sign Height																				
	4'-0"	5'-0"	6'-0"	7'-0"	8'-0"	9'-0"	10'-0"	11'-0"	12'-0"	13'-0"	14'-0"	15'-0"	16'-0"	17'-0"	18'-0"	19'-0"	20'-0"	21'-0"	22'-0"	23'-0"	24'-0"
W6x9	½" x 1½"	½" x 1½"	½" x 1½"	½" x 1½"	—	—	—	—	—	—	—	—	—	—	—	—	—	—	—	—	—
W6x15	½" x 1¾"	½" x 1¾"	½" x 1¾"	⅝" x 2"	⅝" x 2"	¾" x 2"	¾" x 2"	¾" x 2"	¾" x 2"	—	—	—	—	—	—	—	—	—	—	—	—
W8x18	½" x 1¾"	½" x 1¾"	½" x 1¾"	½" x 1¾"	⅝" x 2"	⅝" x 2"	¾" x 2"	¾" x 2"	¾" x 2"	¾" x 2"	—	—	—	—	—	—	—	—	—	—	—
W10x22	½" x 2"	½" x 2"	½" x 2"	½" x 2"	½" x 2"	⅝" x 2"	⅝" x 2"	¾" x 2¼"	¾" x 2¼"	¾" x 2¼"	¾" x 2¼"	¾" x 2¼"	¾" x 2¼"	—	—	—	—	—	—	—	—
W10x26	½" x 2"	½" x 2"	½" x 2"	½" x 2"	½" x 2"	⅝" x 2¼"	⅝" x 2¼"	¾" x 2½"	¾" x 2½"	¾" x 2½"	¾" x 2½"	¾" x 2½"	¾" x 2½"	¾" x 2½"	—	—	—	—	—	—	—
W12x26	½" x 2"	½" x 2"	½" x 2"	½" x 2"	½" x 2"	⅝" x 2¼"	⅝" x 2¼"	¾" x 2½"	¾" x 2½"	¾" x 2½"	¾" x 2½"	¾" x 2½"	¾" x 2½"	¾" x 2½"	¾" x 2½"	—	—	—	—	—	—
W14x30	½" x 2"	½" x 2"	½" x 2"	½" x 2"	½" x 2"	⅝" x 2"	⅝" x 2"	¾" x 2¼"	¾" x 2¼"	¾" x 2¼"	¾" x 2¼"	¾" x 2¼"	¾" x 2¼"	¾" x 2¼"	¾" x 2¼"	¾" x 2¼"	¾" x 2¼"	—	—	—	—
W14x38	½" x 2"	½" x 2"	½" x 2"	½" x 2"	½" x 2"	⅝" x 2¼"	⅝" x 2¼"	¾" x 2½"	¾" x 2½"	¾" x 2½"	¾" x 2½"	⅞" x 2½"	⅞" x 2½"	1" x 2¾"	1" x 2¾"	1" x 2¾"	1" x 2¾"	1" x 2¾"	1" x 2¾"	1" x 2¾"	1" x 2¾"
W16x45	—	½" x 2"	½" x 2"	½" x 2"	½" x 2"	½" x 2"	½" x 2"	⅝" x 2¼"	⅝" x 2¼"	⅝" x 2¼"	¾" x 2½"	¾" x 2½"	⅞" x 2½"	⅞" x 2½"	⅞" x 2½"	1" x 2¾"	1" x 2¾"	1" x 2¾"	1" x 2¾"	1" x 2¾"	1" x 2¾"

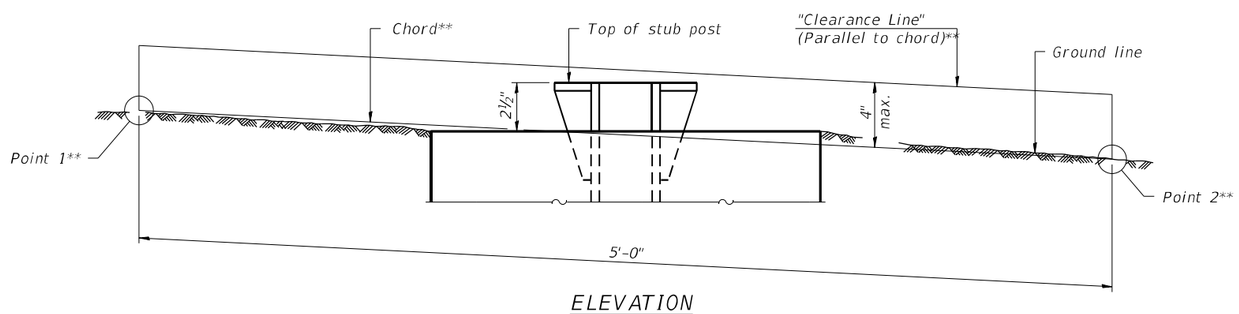

ELEVATION
GROUND LINE & STUB POST

** For all "Point 1" and "Point 2" locations, "Clearance Line" must be at or above top of stub post.

(1) Quantity includes all concrete necessary for one foundation.

(2) Includes reinforcement bars and spiral hooping for one foundation.

BAW-A-2 2-17-2017

(Sheet 2 of 2)

MODEL: PNP-174
FILE NAME: ...\D570C01-sht-SGN_BAW-A-2.dgn

USER NAME = Matt Overbey	DESIGNED -	REVISED -	STATE OF ILLINOIS DEPARTMENT OF TRANSPORTATION
	DRAWN -	REVISED -	
PLOT SCALE = 2.0000 ' / in.	CHECKED -	REVISED -	
PLOT DATE = 1/27/2022 - 10:16:51 PM	DATE - JANUARY 2022	REVISED -	

BREAK-AWAY WIDE FLANGE STEEL SIGN POST TABLES

SCALE: SHEET OF SHEETS STA. TO STA.

F.A.I. RTE.	SECTION	COUNTY	TOTAL SHEETS	SHEET NO.
57	10-(33,34,5,14)R & (10-34)B	CHAMPAIGN	1182	822

CONTRACT NO. 70C01

ILLINOIS FED. AID PROJECT

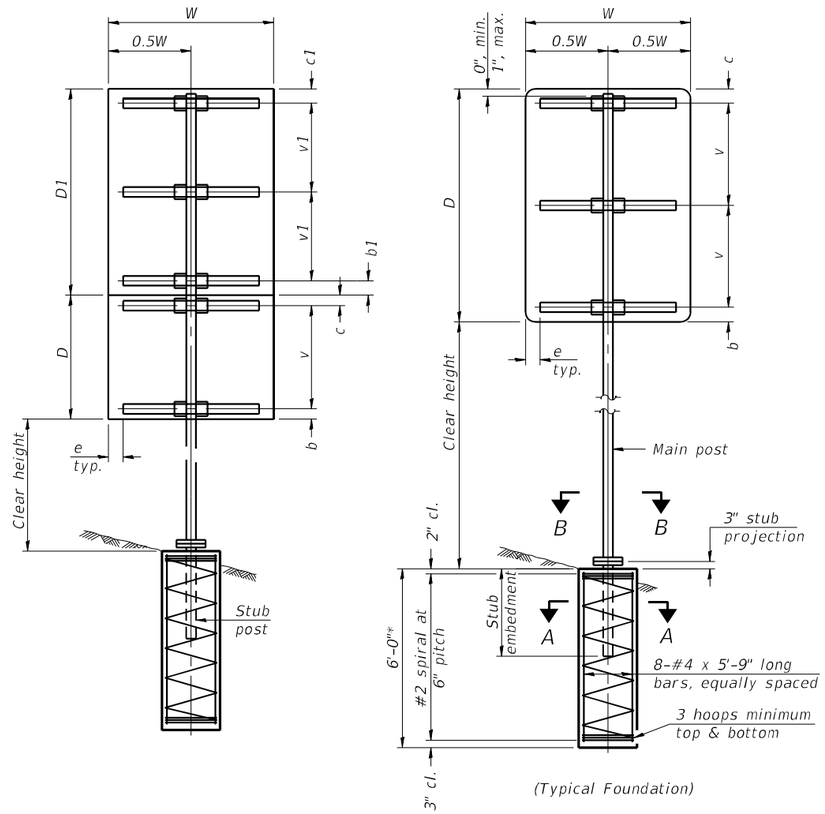

(Typical Foundation)

SINGLE POST ASSEMBLY EXAMPLES

* Dimensional changes required for varying site conditions shall be approved by the Engineer.

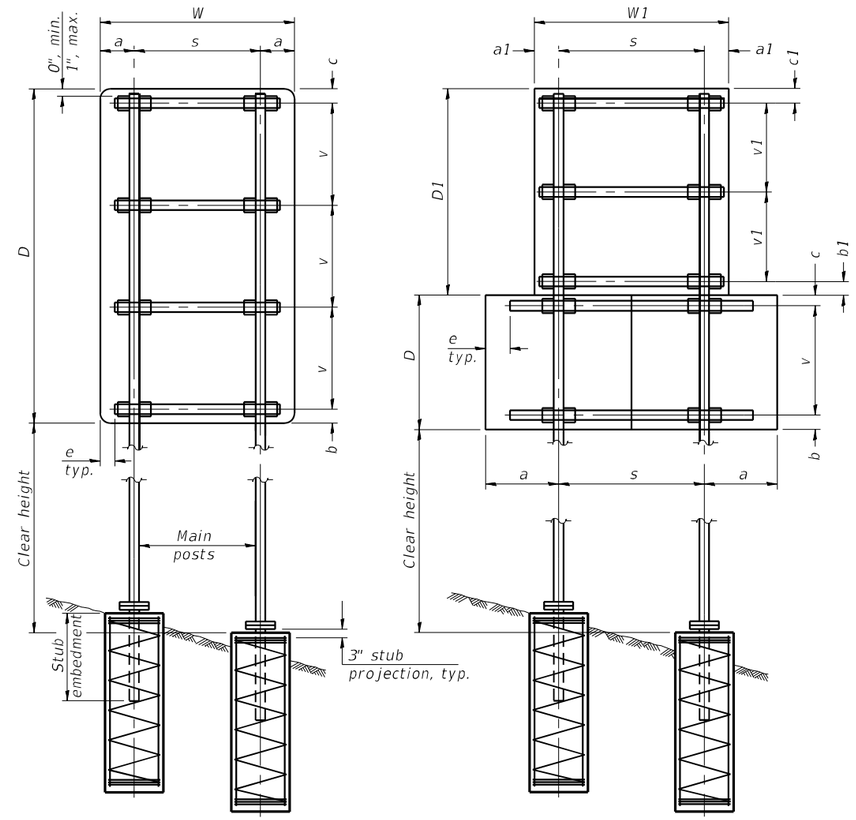

DUAL POST ASSEMBLY EXAMPLES

a or a1 = 6" min. to 2'-0" max. (Approximately 0.2W or 0.2W1)
b or b1 = 3" min. to 4" max
c or c1 = 3" min. to 4" max
e = 0" min. to 6" max
s = 3'-0" min. to 6'-0" max. (Approximately 0.6W or 0.6W1)
v or v1 = 2'-0" min. to 2'-11" max.

MAIN POST STEEL TUBING	WEIGHT PER FOOT (POUND)	STUB POST TABLE		MAIN POST TABLE				
		Stub Embedment	Stub Post Length	Bolt Size	A	t	R	Bolt Circle
3" x 2" x 1/4"	7.11	2'-0"	2'-3"	1/2" x 2 3/4"	8 1/4"	5/8"	9/32"	6 1/2"
4" x 2" x 1/4"	8.81	2'-0"	2'-3"	1/2" x 2 3/4"	8 1/4"	5/8"	9/32"	6 1/2"
4" x 3" x 1/4"	10.51	2'-3"	2'-6"	5/8" x 3 1/4"	10"	3/4"	11/32"	8"
5" x 3" x 1/4"	12.21	2'-3"	2'-6"	5/8" x 3 1/4"	10"	3/4"	11/32"	8"
6" x 3" x 1/4"	13.91	2'-3"	2'-6"	5/8" x 3 1/4"	11 1/2"	3/4"	11/32"	9 1/2"
6" x 4" x 1/4"	15.62	2'-3"	2'-6"	3/4" x 3 1/2"	11 1/2"	3/4"	13/32"	9 1/2"
6" x 4" x 5/16"	19.08	2'-3"	2'-6"	3/4" x 3 1/2"	11 1/2"	3/4"	13/32"	9 1/2"
7" x 5" x 1/4"	19.02	2'-6"	2'-9"	3/4" x 3 1/2"	1'-2"	3/4"	13/32"	1'-0"
8" x 4" x 1/4"	19.02	2'-6"	2'-9"	3/4" x 3 1/2"	1'-2"	3/4"	13/32"	1'-0"
8" x 6" x 1/4"	22.42	2'-6"	2'-9"	7/8" x 3 1/2"	1'-2"	3/4"	15/32"	1'-0"

GENERAL NOTES

Posts shall be plumbed by using shims with post-to-stub post connection bolts snug tight only. Final tightening of all High Strength Bolts shall be in accordance with Article 727.05 and threads at the junction of the bolt and nut shall be burred or center punched to prevent the nut from loosening.

One foundation requires 0.7 cubic yards of concrete and 46 pounds of reinforcement bars and spiral hoops.

LOADING: 80 mph wind with 30% gust factor, normal to sign.

DESIGN STRESSES:
Structural steel - 20,000 psi
Reinforcing steel - 20,000 psi
Concrete - 1,400 psi
Footing soil pressure - 2,000 psf

After fabrication, the post, fuse plate, base plate and upper 6", min. of the stub post shall be hot-dip galvanized in accordance with AASHTO M111. All bolts, nuts and washers shall be hot-dip galvanized in accordance with AASHTO M232.

For Sections A-A and B-B, see Base Sheet BAT-A-2.

FOUNDATIONS:
All necessary excavation or drilling (except in rock); backfilling with excavated material; disposal of unsuitable or surplus material; formwork; and furnishing and placing the Class SI Concrete and reinforcement bars, shall be included in the pay item used for foundations.

The measurement of the tubular steel shall be computed on the basis of the weight per foot of the support, multiplied by the combined length of the main posts and stub posts.

BAT-A-1 2-17-2017

(Sheet 1 of 2)

MODEL: PNP-174
FILE NAME: ...D570C01-sh-SGN_BAT-A-1.dgn

USER NAME = Matt Overbey	DESIGNED -	REVISED -	
	DRAWN -	REVISED -	
PLOT SCALE = 2.0000 ' / in.	CHECKED -	REVISED -	
PLOT DATE = 1/27/2022 - 10:17:19 PM	DATE - JANUARY 2022	REVISED -	

STATE OF ILLINOIS
DEPARTMENT OF TRANSPORTATION

BREAK-AWAY TUBULAR STEEL
SIGN POSTS AND FOUNDATIONS

SCALE: SHEET OF SHEETS STA. TO STA.

F.A.I. RTE.	SECTION	COUNTY	TOTAL SHEETS	SHEET NO.
57	10-(33,34,5,14)R & (10-34)B	CHAMPAIGN	1182	823

CONTRACT NO. 70C01

ILLINOIS FED. AID PROJECT

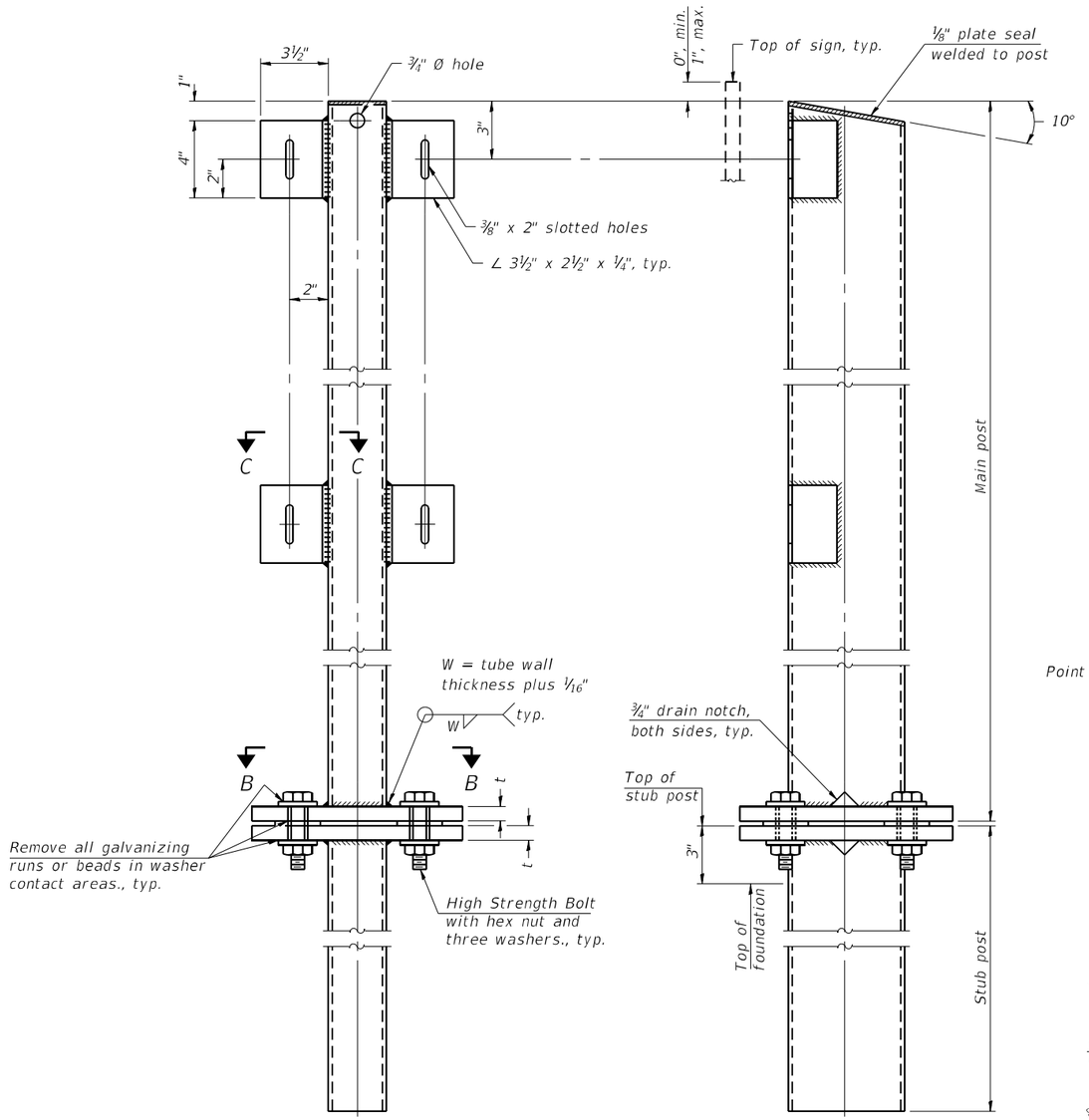

FRONT ELEVATION

SIDE ELEVATION

MAIN POST & STUB POST

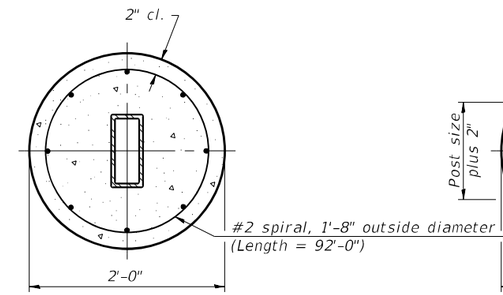

SECTION A-A
(CAST-IN-PLACE)

OR

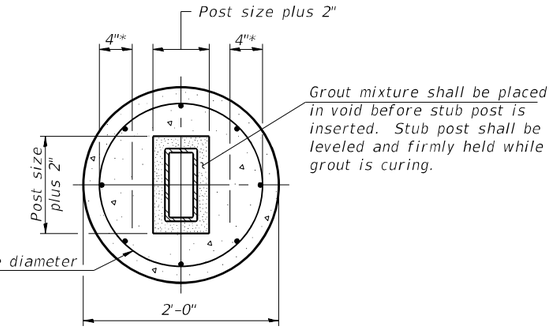

SECTION A-A
(PRECAST)

* Hot dip galvanized lifting loops or inserts may be placed in precast foundation inside the spiral reinforcement but not within 6" of the long axis of the post. Inserts must be adequate for safely lifting a total of 3,000 pounds and must not interfere with installation of the stub post or proper functioning of the slip base.

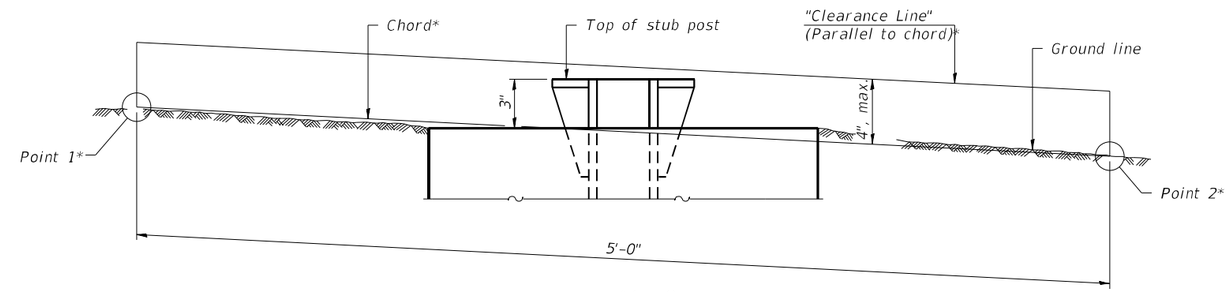

ELEVATION
GROUND LINE & STUB POST

* For all "Point 1" and "Point 2" locations, "Clearance Line" must be at or above top of stub post.

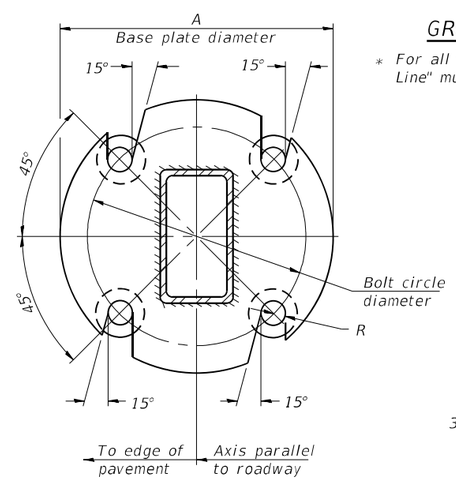

SECTION B-B

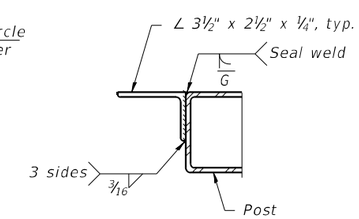

SECTION C-C
Weld continuously around corners.

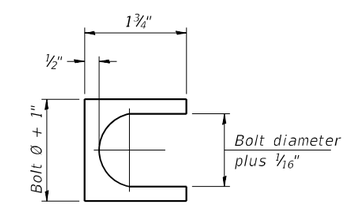

SHIM DETAIL
Furnish two 0.01" thick and two 0.03" thick stainless steel or brass (ASTM B36) shims per post.

BAT-A-2 2-17-2017

(Sheet 2 of 2)

USER NAME = Matt Overbey	DESIGNED -	REVISED -	STATE OF ILLINOIS DEPARTMENT OF TRANSPORTATION
	DRAWN -	REVISED -	
PLOT SCALE = 2.0000 ' / in.	CHECKED -	REVISED -	
PLOT DATE = 1/27/2022 - 10:17:21 PM	DATE - JANUARY 2022	REVISED -	

BREAK-AWAY TUBULAR STEEL SIGN POSTS AND DETAILS

SCALE: SHEET OF SHEETS STA. TO STA.

F.A.I. RTE.	SECTION	COUNTY	TOTAL SHEETS	SHEET NO.
57	10-(33,34,5,14)R & (10-34)B	CHAMPAIGN	1182	824

CONTRACT NO. 70C01

ILLINOIS FED. AID PROJECT

MODEL: PNP-174
FILE NAME: ...\D570C01-sht-SGN_BAT-A-2.dgn

LIGHTING LEGEND

- PROPOSED GROUND MOUNTED LIGHTING UNIT ALUMINUM, 50' M.H., 15' D.A., LED LUMINAIRE WITH 15" B.C. ON CONCRETE FOUNDATION (SEE NOTES 3 & 6)
- PROPOSED BRIDGE MOUNTED LIGHTING UNIT ALUMINUM, 50' M.H., 8' D.A., LED LUMINAIRE
- PROPOSED MEDIAN MOUNTED LIGHTING UNIT ALUMINUM, 50' M.H., 12' D.A. TWIN, LED LUMINAIRE ON CONCRETE FOUNDATION
- PROPOSED UNDERPASS LUMINAIRE, LED LUMINAIRE
- PROPOSED JUNCTION BOX, STAINLESS STEEL, ATTACHED TO STRUCTURE, 12" X 12" X 6", UNLESS NOTED OTHERWISE
- PROPOSED LIGHTING CONTROLLER, BASE MOUNTED, SINGLE PHASE, 3-WIRE, SIZE AS NOTED ON PLAN (SEE NOTE 3)
- PROPOSED ELECTRIC SERVICE INSTALLATION, SINGLE PHASE, 3-WIRE, SIZE AS NOTED ON PLAN
- PROPOSED UNDERGROUND CONDUIT CASING, CNC, 2" DIA.
- L — PROPOSED UNIT DUCT OR CABLE IN CONDUIT, SIZE AS NOTED ON PLAN
- PROPOSED CABLE IN CONDUIT ATTACHED TO STRUCTURE, SIZE AS NOTED ON PLAN
- L — EXISTING UNDERGROUND ELECTRIC CABLE
- A — EXISTING AERIAL CABLE
- EXISTING LIGHTING UNIT TO REMAIN
- EXISTING LIGHTING CONTROLLER TO REMAIN
- EXISTING ELECTRIC SERVICE TO REMAIN
- R — EXISTING LIGHTING UNIT TO BE REMOVED
- R — R — EXISTING MEDIAN MOUNTED LIGHTING UNIT TO BE REMOVED
- R — EXISTING LIGHTING CONTROLLER TO BE REMOVED
- R — EXISTING ELECTRIC SERVICE TO BE REMOVED
- TEMPORARY WOOD POLE, 60' CLASS 3, 50' M.H., 15' M.A., LED LUMINAIRE
- TEMPORARY WOOD POLE, 60' CLASS 3
- TEMPORARY UNIT DUCT, 600V, 2-1C NO.6, 1/C NO.8 GROUND, (XLP-TYPE USE), 1" DIA. POLYETHYLENE
- A — TEMPORARY AERIAL CABLE, 2-1/C NO. 6 WITH MESSENGER WIRE, UNLESS NOTED OTHERWISE
- EXISTING ELECTRIC CABLE TO BE REMOVED

INSTALLED UNDER CONTRACT 70B99

- LIGHTING UNIT, ALUMINUM, 50' M.H., LED LUMINAIRE TO REMAIN
- LIGHTING CONTROLLER TO REMAIN
- ELECTRIC SERVICE INSTALLATION TO REMAIN
- JUNCTION BOX TO REMAIN
- TEMPORARY WOOD POLE, 60' CLASS 3, 50' M.H., 15' M.A., LED LUMINAIRE TO BE REMOVED (SEE NOTE 5)
- TEMPORARY WOOD POLE, 60' CLASS 3 TO BE REMOVED (SEE NOTE 5)
- TEMPORARY LIGHTING CONTROLLER TO BE REMOVED

LEGEND FOR S.P. COLUMN:

* INDICATES SPECIAL PROVISION
BDE INDICATES IDOT BDE SPECIAL PROVISION

CALLOUT KEY

LIGHT POLE DESIGNATION:

49 A 1
- 1 — POLE NUMBER
- A — CIRCUIT DESIGNATION
- 49 — LIGHTING CONTROLLER

GENERAL NOTES:

1. ELECTRIC CABLES IN EXISTING UNIT DUCT OR CONDUIT SHALL BE REMOVED AND PAID FOR AS "REMOVE ELECTRIC CABLE FROM CONDUIT".
2. TEMPORARY LIGHT POLES SHALL BE INSTALLED OUTSIDE THE CLEARZONE.
3. IN NO INSTANCE SHALL THE CONTRACTOR INSTALL A LIGHT POLE AND/OR LIGHTING CONTROLLER WITHIN 5FT OF BACK OF GUARDRAIL POST.
4. THE CONTRACTOR SHALL ENSURE CONTINUITY OF THE CIRCUITS VIA UNDERGROUND OR AERIAL CABLE INSTALLATION, AS NECESSARY, DURING CONSTRUCTION STAGES. THIS WORK SHALL BE PAID FOR AS "MAINTAIN EXISTING LIGHTING SYSTEM".
5. TEMPORARY LIGHT POLES AND TEMPORARY LUMINAIRES SHOWN AS EXISTING AT THE BEGINNING OF THIS CONTRACT SHALL BE REMOVED UNDER THIS CONTRACT, AS SHOWN IN THE PLANS, AND SHALL BECOME THE PROPERTY OF THE STATE OF ILLINOIS.
6. OFFSET FOR PROPOSED GROUND MOUNTED LIGHT POLES IS MEASURED FROM EDGE OF PAVEMENT.
7. ALL PROPOSED ROADWAY AND UNDERPASS LUMINAIRES SHALL BE ORIENTED TOWARD AND PERPENDICULAR TO THE ROADWAY. ALL ROADWAY LUMINAIRES SHALL BE INSTALLED AT 0 DEGREES HORIZONTAL TO GRADE. ALL UNDERPASS LUMINAIRES SHALL BE TILTED IN ACCORDANCE WITH THE LUMINAIRE PERFORMANCE TABLE.

LIGHTING SUMMARY OF QUANTITIES

S.P.	PAY ITEM	DESCRIPTION	UNIT	QUANTITY
*	5000310	LIGHT POLE, ALUMINUM, 50 FT. M.H., 12 FT. DAVIT ARM - TWIN	EACH	26
*	5326691	REMOVE TEMPORARY LIGHTING UNITS, SALVAGE	EACH	71
BDE	80400100	ELECTRIC SERVICE INSTALLATION	EACH	1
	81028720	UNDERGROUND CONDUIT, COILABLE NONMETALLIC CONDUIT, 1" DIA.	FOOT	210
	81028750	UNDERGROUND CONDUIT, COILABLE NONMETALLIC CONDUIT, 2" DIA.	FOOT	1,225
	81100454	CONDUIT ATTACHED TO STRUCTURE, 1" DIA., STAINLESS STEEL	FOOT	5,525
	81104580	CONDUIT ATTACHED TO STRUCTURE, 2" DIA., STAINLESS STEEL	FOOT	170
	81200230	CONDUIT EMBEDDED IN STRUCTURE, 2" DIA., PVC	FOOT	6,715
	81300220	JUNCTION BOX, STAINLESS STEEL, ATTACHED TO STRUCTURE, 6" X 6" X 4"	EACH	94
	81300530	JUNCTION BOX, STAINLESS STEEL, ATTACHED TO STRUCTURE, 12" X 10" X 6"	EACH	22
	81300550	JUNCTION BOX, STAINLESS STEEL, ATTACHED TO STRUCTURE, 12" X 12" X 6"	EACH	4
	81300830	JUNCTION BOX, STAINLESS STEEL, ATTACHED TO STRUCTURE, 18" X 18" X 8"	EACH	20
	81300986	JUNCTION BOX, STAINLESS STEEL, EMBEDDED IN STRUCTURE, 8" X 24" X 10"	EACH	3
	81603000	UNIT DUCT, 600V, 2-1C NO.8, 1/C NO.8 GROUND, (XLP-TYPE USE), 3/4" DIA. POLYETHYLENE	FOOT	12,900
	81603010	UNIT DUCT, 600V, 2-1C NO.10, 1/C NO.10 GROUND, (XLP-TYPE USE), 3/4" DIA. POLYETHYLENE	FOOT	1,335
	81603040	UNIT DUCT, 600V, 2-1C NO.6, 1/C NO.8 GROUND, (XLP-TYPE USE), 1" DIA. POLYETHYLENE	FOOT	21,260
	81702110	ELECTRIC CABLE IN CONDUIT, 600V (XLP-TYPE USE) 1/C NO. 10	FOOT	21,165
	81702120	ELECTRIC CABLE IN CONDUIT, 600V (XLP-TYPE USE) 1/C NO. 8	FOOT	12,675
	81702130	ELECTRIC CABLE IN CONDUIT, 600V (XLP-TYPE USE) 1/C NO. 6	FOOT	9,600
	81800230	AERIAL CABLE, 2-1/C NO. 6 WITH MESSENGER WIRE	FOOT	4,845
BDE	82110008	LUMINAIRE, LED, ROADWAY, OUTPUT DESIGNATION H	EACH	193
BDE	82110022	LUMINAIRE, LED, UNDERPASS, WALLMOUNT, OUTPUT DESIGNATION E	EACH	8
BDE	82110027	LUMINAIRE, LED, UNDERPASS, SUSPENDED, OUTPUT DESIGNATION E	EACH	57
	82500350	LIGHTING CONTROLLER, BASE MOUNTED, 240VOLT, 100AMP	EACH	1
	83004300	LIGHT POLE, ALUMINUM, 50 FT. M.H., 8 FT. DAVIT ARM	EACH	2
	83004600	LIGHT POLE, ALUMINUM, 50 FT. M.H., 15 FT. DAVIT ARM	EACH	139
	83600300	LIGHT POLE FOUNDATION, 30" DIAMETER	FOOT	1,093
	83800205	BREAKAWAY DEVICE, TRANSFORMER BASE, 15 INCH BOLT CIRCLE	EACH	139
*	84100110	REMOVAL OF TEMPORARY LIGHTING UNIT	EACH	24
	84200500	REMOVAL OF LIGHTING UNIT, SALVAGE	EACH	7
	84200600	REMOVAL OF LIGHTING UNIT, NO SALVAGE	EACH	47
	84200804	REMOVAL OF POLE FOUNDATION	EACH	43
	84500110	REMOVAL OF LIGHTING CONTROLLER	EACH	3
	84500120	REMOVAL OF ELECTRIC SERVICE INSTALLATION	EACH	3
	89502300	REMOVE ELECTRIC CABLE FROM CONDUIT	FOOT	66,090
*	X0326148	TEMPORARY WOOD POLE, 60 FT., CLASS 4, 15 FT. MAST ARM	EACH	20
*	X0327004	TEMPORARY WOOD POLE, 60 FT., CLASS 4	EACH	4
*	X8211009	TEMPORARY LUMINAIRE, LED, ROADWAY, OUTPUT DESIGNATION I	EACH	20
*	Z0033024	MAINTAIN EXISTING LIGHTING SYSTEM	L SUM	1

**EXISTING LIGHTING EQUIPMENT TO BE SALVAGED

PAY ITEM	LIGHTING CONTROLLER 49 RELATED EQUIPMENT/POLES	LIGHTING CONTROLLER 50 RELATED EQUIPMENT/POLES
REMOVAL OF LIGHTING UNIT, SALVAGE (84200500)	116, 117, 127	144, 148, 151, 156

** = SALVAGED BACK TO THE STATE OF ILLINOIS

CABLE TAGS

*** (A) UNIT DUCT, 600V, 2-1C NO.6, 1/C NO.8 GROUND, (XLP-TYPE USE), 1" DIA. POLYETHYLENE

*** (B) UNIT DUCT, 600V, 2-1C NO.8, 1/C NO.8 GROUND, (XLP-TYPE USE), 3/4" DIA. POLYETHYLENE

*** (C) UNIT DUCT, 600V, 2-1C NO.10, 1/C NO.10 GROUND, (XLP-TYPE USE), 3/4" DIA. POLYETHYLENE

(D) ELECTRIC CABLE IN CONDUIT, 600V (XLP-TYPE USE) 2-1C NO.6, 1/C NO.8 GROUND, IN CONDUIT EMBEDDED IN STRUCTURE, 2" DIA., PVC

(E) ELECTRIC CABLE IN CONDUIT, 600V (XLP-TYPE USE) 2-1C NO.8, 1/C NO.8 GROUND, IN CONDUIT EMBEDDED IN STRUCTURE, 2" DIA., PVC

(F) ELECTRIC CABLE IN CONDUIT, 600V (XLP-TYPE USE) 2-1C NO.10, 1/C NO.10 GROUND, IN CONDUIT EMBEDDED IN STRUCTURE, 2" DIA., PVC

*** = CNC AND ELECTRIC CABLE IN CONDUIT MAY BE USED IN LIEU OF UNIT DUCT, AS NECESSARY, AT NO ADDITIONAL COST. SIZE SHALL BE AS NOTED.

HIGHWAY STANDARDS

812001-01	RACEWAY EMBEDDED IN STRUCTURE
821101-02	LUMINAIRE WIRING IN POLE
825021-04	LIGHTING CONTROLLER BASE MOUNTED, 240V
830006-05	LIGHT POLE ALUMINUM DAVIT ARM
830026-01	TEMPORARY ROADWAY LIGHTING
836001-04	LIGHT POLE FOUNDATION
836011-02	LIGHT POLE FOUNDATION WITH 44 IN. (1120 MM) CONCRETE BARRIER
838001-01	BREAKAWAY DEVICES

INDEX OF SHEETS

LIGHTING STAGING NOTES:

*I-74 STAGE 1 AND I-57 STAGE 5:

N1. INSTALL TEMPORARY LIGHTING, AS SHOWN. EXISTING LIGHTING TO BE REMOVED SHALL REMAIN IN PLACE AND USED IN CONJUNCTION WITH THE TEMPORARY LIGHTING, UNLESS NOTED OTHERWISE.

N2. EXISTING LIGHTING TO BE REMOVED UPON ACTIVATION OF TEMPORARY LIGHTING, AS NOTED.

N3. EXISTING LIGHTING TO BE REMOVED.

N4. INSTALL PROPOSED LIGHTING, AS SHOWN. PROPOSED MEDIAN LIGHT POLES SHALL BE ACTIVATED IN A LATER STAGE.

**I-74 STAGE 2 AND I-57 STAGE 6:

N1. INSTALL TEMPORARY LIGHTING, AS SHOWN. EXISTING LIGHTING TO BE REMOVED SHALL REMAIN IN PLACE AND USED IN CONJUNCTION WITH THE TEMPORARY LIGHTING, UNLESS NOTED OTHERWISE.

N2. EXISTING/TEMPORARY LIGHTING TO BE REMOVED UPON ACTIVATION OF PROPOSED LIGHTING, AS NOTED.

N3. INSTALL PROPOSED LIGHTING, AS SHOWN.

***I-74 STAGE 4 AND I-57 STAGE 8:

N1. EXISTING/TEMPORARY LIGHTING TO BE REMOVED UPON ACTIVATION OF PROPOSED LIGHTING, AS NOTED.

N2. INSTALL PROPOSED LIGHTING, AS SHOWN.

* = WORK ASSOCIATED WITH I-74 TO OCCUR DURING STAGE 1, WORK ASSOCIATED WITH I-57 TO OCCUR DURING STAGE 5.

** = WORK ASSOCIATED WITH I-74 TO OCCUR DURING STAGE 2. WORK ASSOCIATED WITH I-57 TO OCCUR DURING STAGE 6.

*** = WORK ASSOCIATED WITH I-74 TO OCCUR DURING STAGE 4. WORK ASSOCIATED WITH I-57 TO OCCUR DURING STAGE 8.

CALLOUT KEY

STAGING NOTE DESIGNATION:

N1

NOTE NUMBER

FILE NAME = D570C01-lightlegend2.dgn	USER NAME = bbarr	DESIGNED -	REVISED -	STATE OF ILLINOIS DEPARTMENT OF TRANSPORTATION	LIGHTING STAGING NOTES			F.A.I. RTE.	SECTION	COUNTY	TOTAL SHEETS / SHEET NO.
		DRAWN -	REVISED -					57	10-(33,34,5,14)R & (10-34)B	CHAMPAIGN	1182 / 826
	PLOT SCALE = 100.0000 ' / in.	CHECKED -	REVISED -							CONTRACT NO. 70C01	
	PLOT DATE = 1/27/2022	DATE -	REVISED -		SCALE: NONE	SHEET 2 OF 58 SHEETS	STA. TO STA.		ILLINOIS	FED. AID PROJECT	

PROPOSED LIGHTING UNIT SCHEDULE

LIGHT UNIT LABEL	STATION	OFFSET
49A1	NIC	
49A2	NIC	
49A3	NIC	
49A4	NIC	
49A5	NIC	
49A6	NIC	
49A7	NIC	
49A8	NIC	
49A9	1863+51	20' RT
49A10	1861+31	20' RT
49A11	NIC	
49A12	NIC	
49A13	NIC	
49A14	NIC	
49A15	NIC	
49A16	NIC	
49A17	NIC	
49A18	NIC	
49A19	NIC	
49A20	NIC	
49A21	NIC	
49B1	NIC	
49B2	NIC	
49B3	NIC	
49B4	NIC	
49B5	NIC	
49B6	NIC	
49B7	NIC	
49B8	NIC	
49B9	NIC	
49B10	NIC	
49B11	NIC	
49B12	581+12	15' LT
49B13	583+62	20' LT
49B14	585+72	20' LT
49B15	587+82	20' LT
49B16	589+54	20' LT

LIGHT UNIT LABEL	STATION	OFFSET
49B17	592+72	20' LT
49B18	594+22	15' LT
49B19	NIC	
49B20	NIC	
49B21	NIC	
49B22	NIC	
49B23	NIC	
49B24	NIC	
49B25	NIC	
49B26	563+53	20' LT
49B27	561+22	20' LT
49C1	1044+49	20' RT
49C2	1042+19	20' RT
49C3	1039+89	20' RT
49C4	1037+59	15' RT
49C5	1046+69	20' RT
49C6	1048+89	20' RT
49C7	1051+09	20' RT
49C8	1053+08	20' RT
49C9	NIC	
49C10	NIC	
49C11	335+08	20' RT
49C12	336+83	20' RT
49C13	1061+45	RT
49C14	NIC	
49C15	NIC	
49C16	NIC	
49C17	NIC	
49C18	NIC	
49C19	NIC	
49C20	NIC	
49C21	NIC	
49C22	NIC	
49C23	NIC	
49C24	309+18	20' RT
49C25	307+08	20' RT
49C26	303+03	20' RT

LIGHT UNIT LABEL	STATION	OFFSET
49C27	301+07	20' RT
49C28	603+91	20' LT
49C29	605+91	20' LT
49C30	607+30	15' LT
49D1	826+38	20' RT
49D2	828+68	20' RT
49D3	830+98	20' RT
49D4	1036+32	20' LT
49D5	1869+21	20' LT
49D6	1866+91	20' LT
49D7	824+08	20' RT
49D8	821+88	20' RT
49D9	819+67	20' RT
49D10	817+63	20' RT
49D11	1052+45	20' LT
49D12	1054+24	20' LT
49D13	644+18	20' RT
49D14	642+39	20' RT
49D15	640+64	20' RT
49D16	1061+34	LT
49D17	815+38	20' RT
49D18	813+14	20' RT
49D19	810+89	20' RT
49D20	808+64	20' RT
49D21	806+40	20' RT
49D22	804+16	20' RT
49D23	801+96	20' RT
49D24	613+84	20' LT
49D25	616+34	20' LT
49D26	618+84	20' LT
49D27	621+34	20' LT
49D28	623+64	20' LT
49D29	625+94	20' LT
50A1	NIC	
50A2	NIC	
50A3	NIC	
50A4	NIC	

NOT IN CONTRACT (NIC)

FILE NAME = D570C01-lightlegend3.dgn	USER NAME = bbarr	DESIGNED -	REVISED -
		DRAWN -	REVISED -
	PLOT SCALE = 100.0000 ' / in.	CHECKED -	REVISED -
	PLOT DATE = 1/27/2022	DATE -	REVISED -

STATE OF ILLINOIS
DEPARTMENT OF TRANSPORTATION

PROPOSED LIGHTING UNIT SCHEDULE

SCALE: NONE | SHEET 3 OF 58 SHEETS | STA. TO STA.

F.A.I. RTE.	SECTION	COUNTY	TOTAL SHEETS	SHEET NO.
57	10-(33,34,5,14)R & (10-34)B	CHAMPAIGN	1182	827

CONTRACT NO. 70C01

ILLINOIS FED. AID PROJECT

PROPOSED LIGHTING UNIT SCHEDULE

LIGHT UNIT LABEL	STATION	OFFSET
50A5	NIC	
50A6	NIC	
50A7	NIC	
50A8	NIC	
50A9	NIC	
50A10	NIC	
50A11	NIC	
50A12	NIC	
50A13	NIC	
50A14	NIC	
50A15	NIC	
50A16	NIC	
50A17	NIC	
50B1	NIC	
50B2	NIC	
50B3	NIC	
50B4	NIC	
50B5	NIC	
50B6	NIC	
50B7	NIC	
50B8	NIC	
50B9	NIC	
50B10	NIC	
50B11	NIC	
50B12	NIC	
50B13	NIC	
50B14	NIC	
50B15	620+12	15' RT
50B16	617+69	20' RT
50B17	615+19	20' RT
50B18	612+79	20' RT
50B19	610+39	20' RT
50B20	607+99	20' RT
50B21	605+91	20' RT
50B22	603+86	20' RT
50B23	601+91	15' RT
50C1	3001+15	20' LT

LIGHT UNIT LABEL	STATION	OFFSET
50C2	3003+15	20' LT
50C3	1084+60	MEDIAN
50C4	1084+60	MEDIAN
50C5	1086+37	MEDIAN
50C6	1086+37	MEDIAN
50C7	1089+46	MEDIAN
50C8	1089+46	MEDIAN
50C9	1091+59	MEDIAN
50C10	1091+59	MEDIAN
50C11	1093+64	MEDIAN
50C12	1093+64	MEDIAN
50C13	1095+69	MEDIAN
50C14	1095+69	MEDIAN
50C15	1098+19	MEDIAN
50C16	1098+19	MEDIAN
50C17	1100+69	MEDIAN
50C18	1100+69	MEDIAN
50C19	1103+19	MEDIAN
50C20	1103+19	MEDIAN
50C21	1105+70	MEDIAN
50C22	1105+70	MEDIAN
50D1	1078+64	20' LT
50D2	1076+64	20' LT
50D3	1074+64	20' LT
50D4	1072+48	20' LT
50D5	1070+33	20' LT
50D6	1068+18	20' LT
50D7	NIC	
50D8	634+47	20' RT
50D9	636+67	20' RT
50D10	NIC	
50D11	NIC	
50D12	NIC	
50D13	NIC	
50D14	NIC	
50D15	NIC	
50D16	NIC	

LIGHT UNIT LABEL	STATION	OFFSET
50D17	NIC	
50D18	NIC	
50D19	NIC	
50D20	609+04	20' RT
50D21	607+08	20' RT
50D22	603+71	20' RT
50D23	602+21	20' RT
50D24	600+04	20' RT
50D25	590+23	20' RT
50D26	587+82	20' RT
50D27	585+72	20' RT
50D28	583+62	15' RT
50E1	134+17	20' RT
50E2	136+16	20' RT
50E3	138+16	15' RT
50E4	132+17	20' RT
50E5	130+17	20' RT
50E6	128+16	20' RT
50E7	126+12	20' RT
50E8	1070+07	20' RT
50E9	345+21	20' RT
50E10	343+01	20' RT
50E11	340+81	20' RT
50E12	123+87	20' RT
50E13	121+63	20' RT
50E14	119+38	20' RT
50E15	117+13	20' RT
50E16	114+89	20' RT
50E17	112+65	20' RT
50E18	110+60	20' RT
50E19	108+18	20' RT
50E20	106+49	15' RT
50E21	104+49	20' RT
50E22	102+49	20' RT
50E23	100+48	20' RT
50E24	571+57	20' RT
50E25	569+27	20' RT

NOT IN CONTRACT (NIC)

L-4

PROPOSED LIGHTING UNIT SCHEDULE

LIGHT UNIT LABEL	STATION	OFFSET	LIGHT UNIT LABEL	STATION	OFFSET
13A3	22+67	20' RT	51A17	1133+21	MEDIAN
13A4	20+53	20' RT	51A18	1130+71	MEDIAN
13A5	18+28	20' RT	51A19	1130+71	MEDIAN
13A6	15+98	20' RT	51A20	1128+20	MEDIAN
13A7	13+69	20' RT	51A21	1128+20	MEDIAN
13A8	11+44	20' RT	51A22	1125+70	MEDIAN
13A9	637+37	20' RT	51A23	1125+70	MEDIAN
13A10	634+97	20' RT	51A24	1123+20	MEDIAN
13A11	632+57	20' RT	51A25	1123+20	MEDIAN
13A12	630+17	20' RT	51A26	1120+70	MEDIAN
13A13	753+89	20' RT	51A27	1120+70	MEDIAN
13B4	15+45	20' RT	51A28	1118+20	MEDIAN
13B5	11+83	20' RT	51A29	1118+20	MEDIAN
13B6	14+12	20' RT	51A30	1115+70	MEDIAN
13B7	16+40	20' RT	51A31	1115+70	MEDIAN
13B8	18+68	20' RT	51A32	1113+20	MEDIAN
13B9	20+93	20' RT	51A33	1113+20	MEDIAN
13B10	23+18	20' RT	51A34	1110+70	MEDIAN
13B11	633+74	20' LT	51A35	1110+70	MEDIAN
13B12	631+34	20' LT	51A36	1108+20	MEDIAN
13B13	628+94	20' LT	51A37	1108+20	MEDIAN
51A1	37+62	20' RT	51B9	12+95	20' RT
51A2	35+57	20' RT	51B10	15+10	20' RT
51A3	33+52	20' RT	51B11	17+26	20' RT
51A4	31+46	20' RT	51B12	19+43	20' RT
51A5	29+40	20' RT			
51A6	1140+71	MEDIAN			
51A7	1140+71	MEDIAN			
51A8	1143+21	MEDIAN			
51A9	1143+21	MEDIAN			
51A10	1145+71	MEDIAN			
51A11	1145+71	MEDIAN			
51A12	1138+21	MEDIAN			
51A13	1138+21	MEDIAN			
51A14	1135+71	MEDIAN			
51A15	1135+71	MEDIAN			
51A16	1133+21	MEDIAN			

FILE NAME = D570C01-lightlegend5.dgn	USER NAME = bbarr	DESIGNED -	REVISED -	STATE OF ILLINOIS DEPARTMENT OF TRANSPORTATION	PROPOSED LIGHTING UNIT SCHEDULE	F.A.I. RTE.	SECTION	COUNTY	TOTAL SHEETS / SHEET NO.
		DRAWN -	REVISED -			57	10-(33,34,5,14)R & (10-34)B	CHAMPAIGN	1182 / 829
	PLOT SCALE = 100.0000 ' / in.	CHECKED -	REVISED -					CONTRACT NO. 70C01	
	PLOT DATE = 1/27/2022	DATE -	REVISED -		SCALE: NONE / SHEET 5 OF 58 SHEETS / STA. TO STA.		ILLINOIS FED. AID PROJECT		

NOTES:

1. SEE SHEET L-1 FOR GENERAL NOTES. SEE SHEET L-2 FOR LIGHTING STAGING NOTES.

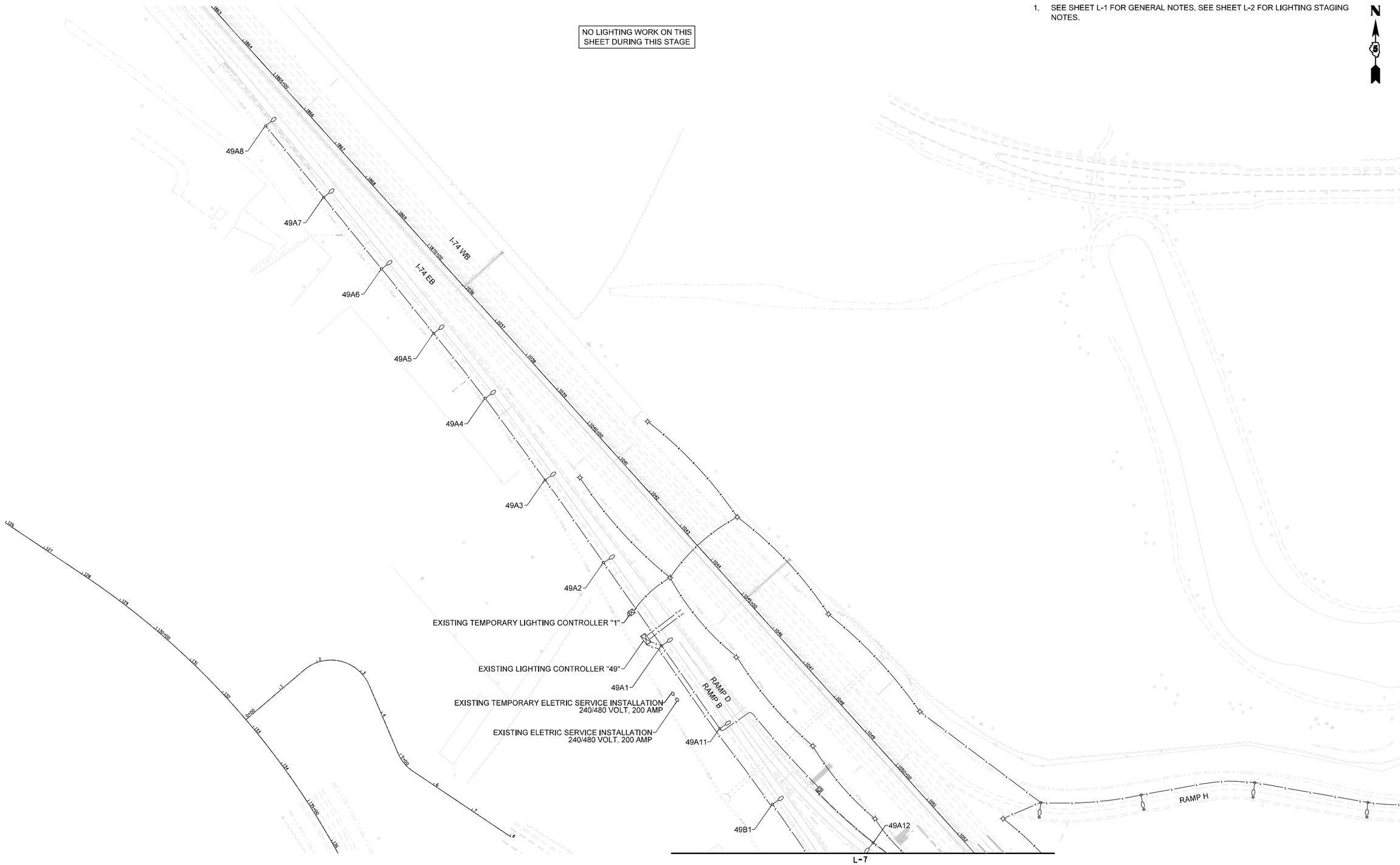

FILE NAME = D570C01-remlightStage1-1.dgn	USER NAME = bbarr	DESIGNED -	REVISED -	STATE OF ILLINOIS DEPARTMENT OF TRANSPORTATION	TEMPORARY LIGHTING AND REMOVAL PLAN I-74 STAGE 1	F.A.I. RTE.	SECTION	COUNTY	TOTAL SHEETS / SHEET NO.
		DRAWN -	REVISED -			57	10-(33,34,5,14)R & (10-34)B	CHAMPAIGN	1182 / 830
	PLOT SCALE = 200.0000 ' / in.	CHECKED -	REVISED -					CONTRACT NO. 70C01	
	PLOT DATE = 1/27/2022	DATE -	REVISED -		SCALE: 1"=100' / SHEET 6 OF 58 SHEETS / STA. TO STA.		ILLINOIS FED. AID PROJECT		

NOTES:

1. SEE SHEET L-1 FOR GENERAL NOTES. SEE SHEET L-2 FOR LIGHTING STAGING NOTES.

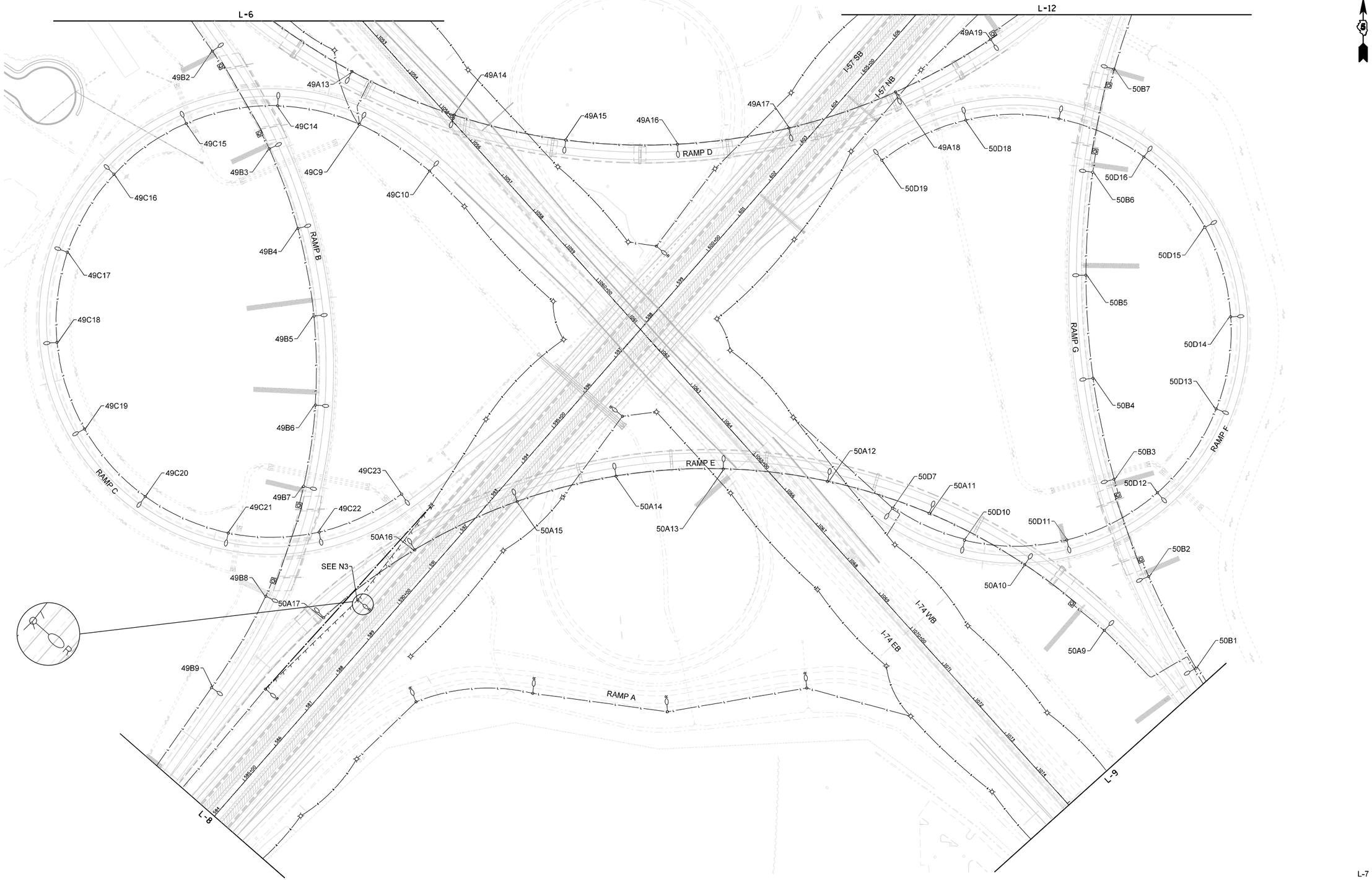

L-7

FILE NAME = D570C01-remlightStage1-2.dgn	USER NAME = bbarr	DESIGNED -	REVISED -
		DRAWN -	REVISED -
	PLOT SCALE = 200.0000 ' / in.	CHECKED -	REVISED -
	PLOT DATE = 2/27/2022	DATE -	REVISED -

STATE OF ILLINOIS
DEPARTMENT OF TRANSPORTATION

TEMPORARY LIGHTING AND REMOVAL PLAN
I-74 STAGE 1 AND I-57 STAGE 5

SCALE: 1"=100' | SHEET 7 OF 58 SHEETS | STA. TO STA.

F.A.I. RTE.	SECTION	COUNTY	TOTAL SHEETS	SHEET NO.
57	10-(33,34,5,14)R & (10-34)B	CHAMPAIGN	1182	831

CONTRACT NO. 70C01

ILLINOIS FED. AID PROJECT

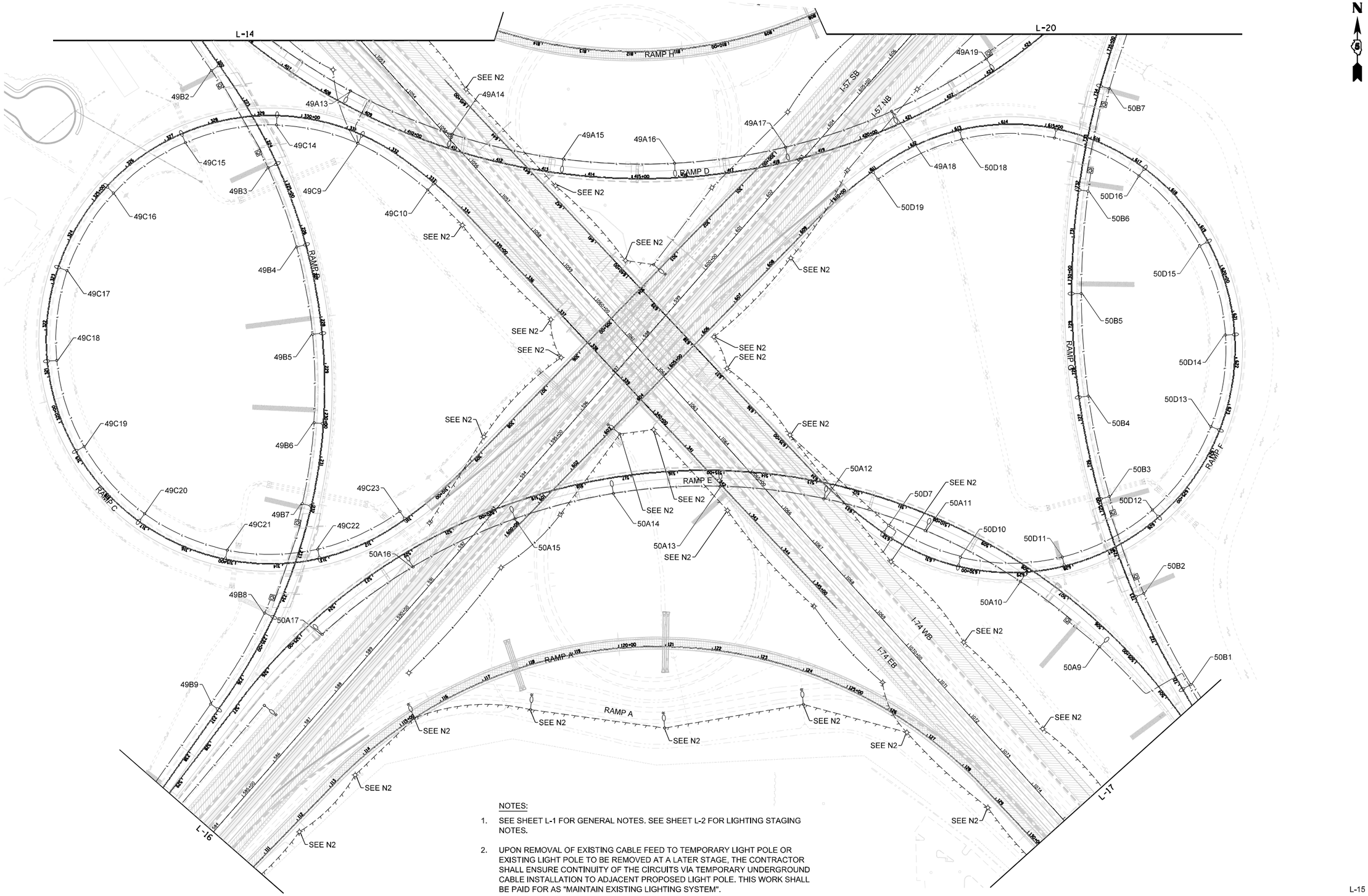

NOTES:

1. SEE SHEET L-1 FOR GENERAL NOTES. SEE SHEET L-2 FOR LIGHTING STAGING NOTES.

2. UPON REMOVAL OF EXISTING CABLE FEED TO TEMPORARY LIGHT POLE OR EXISTING LIGHT POLE TO BE REMOVED AT A LATER STAGE, THE CONTRACTOR SHALL ENSURE CONTINUITY OF THE CIRCUITS VIA TEMPORARY UNDERGROUND CABLE INSTALLATION TO ADJACENT PROPOSED LIGHT POLE. THIS WORK SHALL BE PAID FOR AS "MAINTAIN EXISTING LIGHTING SYSTEM".

FILE NAME = D570C01-remlightStage2-2.dgn	USER NAME = bbarr	DESIGNED -	REVISED -
		DRAWN -	REVISED -
	PLOT SCALE = 200.0000 ' / in.	CHECKED -	REVISED -
	PLOT DATE = 2/27/2022	DATE -	REVISED -

STATE OF ILLINOIS
DEPARTMENT OF TRANSPORTATION

TEMPORARY LIGHTING AND REMOVAL PLAN
I-74 STAGE 2 AND I-57 STAGE 6

SCALE: 1"=100' | SHEET 15 OF 58 SHEETS | STA. TO STA.

F.A.I. RTE.	SECTION	COUNTY	TOTAL SHEETS	SHEET NO.
57	10-(33,34,5,14)R & (10-34)B	CHAMPAIGN	1182	832
		CONTRACT NO. 70C01		
		ILLINOIS FED. AID PROJECT		

NOTES:

1. SEE SHEET L-1 FOR GENERAL NOTES. SEE SHEET L-2 FOR LIGHTING STAGING NOTES.

NO LIGHTING WORK ON THIS SHEET DURING THIS STAGE

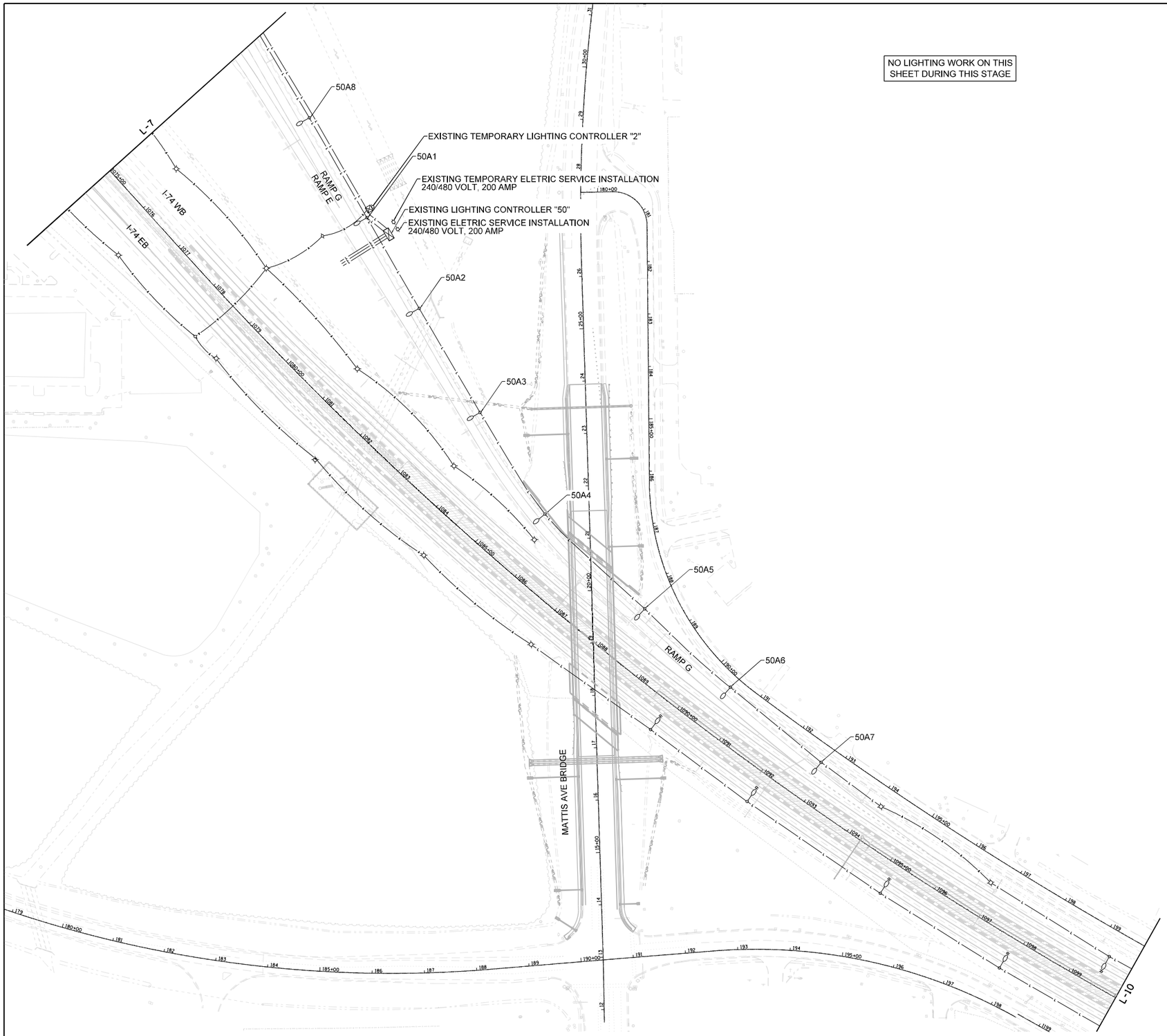

L-9

FILE NAME = D570C01-remlightStage1-4.dgn	USER NAME = bbarr	DESIGNED -	REVISED -	STATE OF ILLINOIS DEPARTMENT OF TRANSPORTATION	TEMPORARY LIGHTING AND REMOVAL PLAN I-74 STAGE 1	F.A.I. RTE.	SECTION	COUNTY	TOTAL SHEETS / SHEET NO.
		DRAWN -	REVISED -			57	10-(33,34,5,14)R & (10-34)B	CHAMPAIGN	1182 / 833
	PLOT SCALE = 200.0000 ' / in.	CHECKED -	REVISED -					CONTRACT NO. 70C01	
	PLOT DATE = 1/27/2022	DATE -	REVISED -		SCALE: 1"=100' SHEET 9 OF 58 SHEETS STA. TO STA.		ILLINOIS FED. AID PROJECT		

NOTES:

1. SEE SHEET L-1 FOR GENERAL NOTES. SEE SHEET L-2 FOR LIGHTING STAGING NOTES.
2. THE REMOVAL OF MEDIAN LIGHT POLE FOUNDATION SHALL BE INCLUDED IN THE COST OF MEDIAN BARRIER WALL REMOVAL.

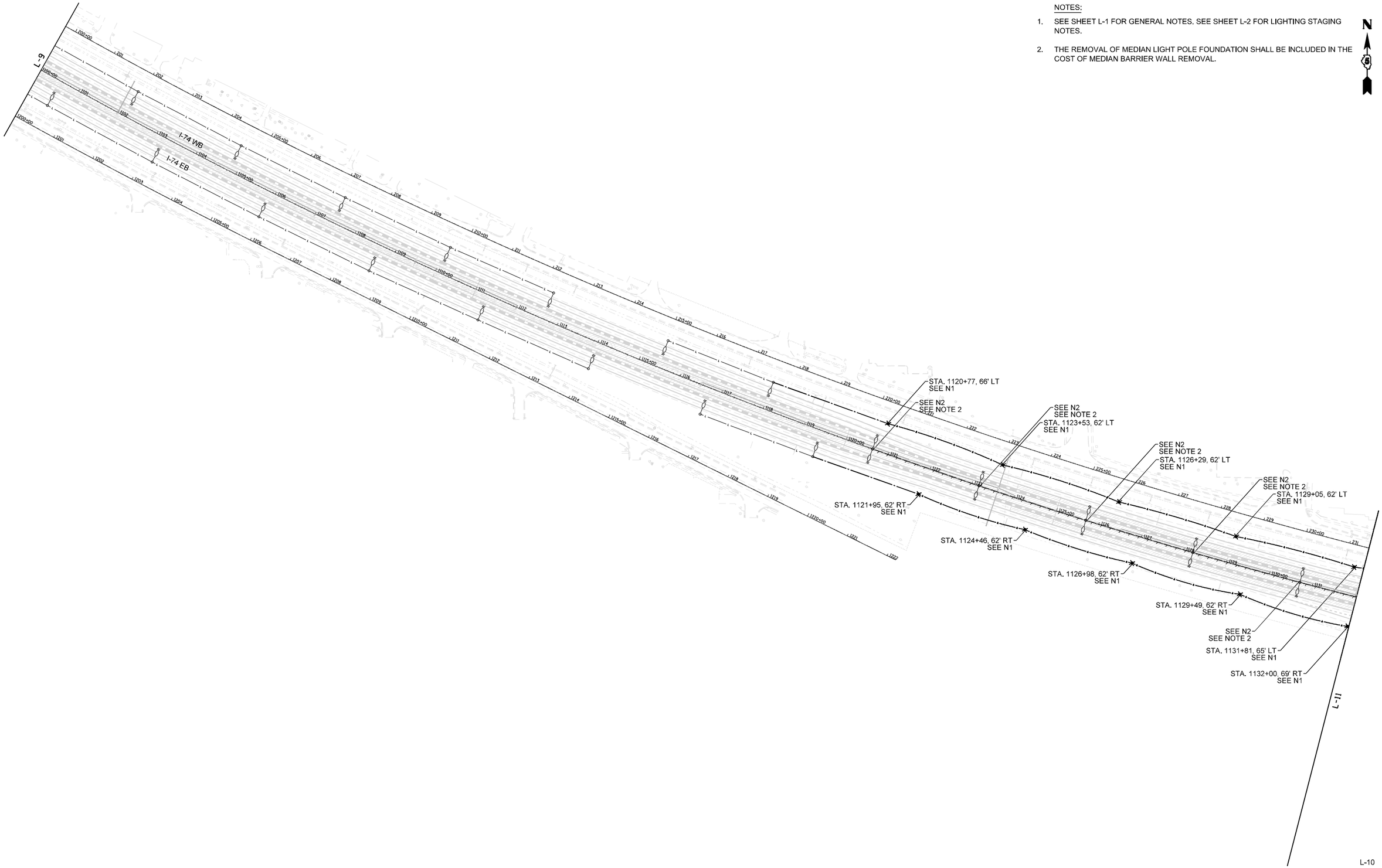

L-10

FILE NAME = D570C01-remlightStage1-5.dgn	USER NAME = bbarr	DESIGNED -	REVISED -	STATE OF ILLINOIS DEPARTMENT OF TRANSPORTATION	TEMPORARY LIGHTING AND REMOVAL PLAN I-74 STAGE 1	F.A.I. RTE.	SECTION	COUNTY	TOTAL SHEETS	SHEET NO.
		DRAWN -	REVISED -			57	10-(33,34,5,14)R & (10-34)B	CHAMPAIGN	1182	834
	PLOT SCALE = 200.0000 ' / in.	CHECKED -	REVISED -			CONTRACT NO. 70C01				
	PLOT DATE = 1/27/2022	DATE -	REVISED -		SCALE: 1"=100' SHEET 10 OF 58 SHEETS STA. TO STA.	ILLINOIS FED. AID PROJECT				

NOTES:

1. SEE SHEET L-1 FOR GENERAL NOTES. SEE SHEET L-2 FOR LIGHTING STAGING NOTES.
2. THE REMOVAL OF MEDIAN LIGHT POLE FOUNDATION SHALL BE INCLUDED IN THE COST OF MEDIAN BARRIER WALL REMOVAL.
3. EXISTING LIGHT POLE SHALL BE REMOVED AND EXISTING LIGHT POLE FOUNDATION SHALL REMAIN IN PLACE.
4. EXISTING EMBEDDED CONDUIT TO REMAIN IN PLACE. ELECTRIC CABLES IN CONDUIT SHALL BE REMOVED AND PAID FOR AS "REMOVE ELECTRIC CABLE FROM CONDUIT".
5. EXISTING CABLE ROUTE TO BE FIELD VERIFIED.

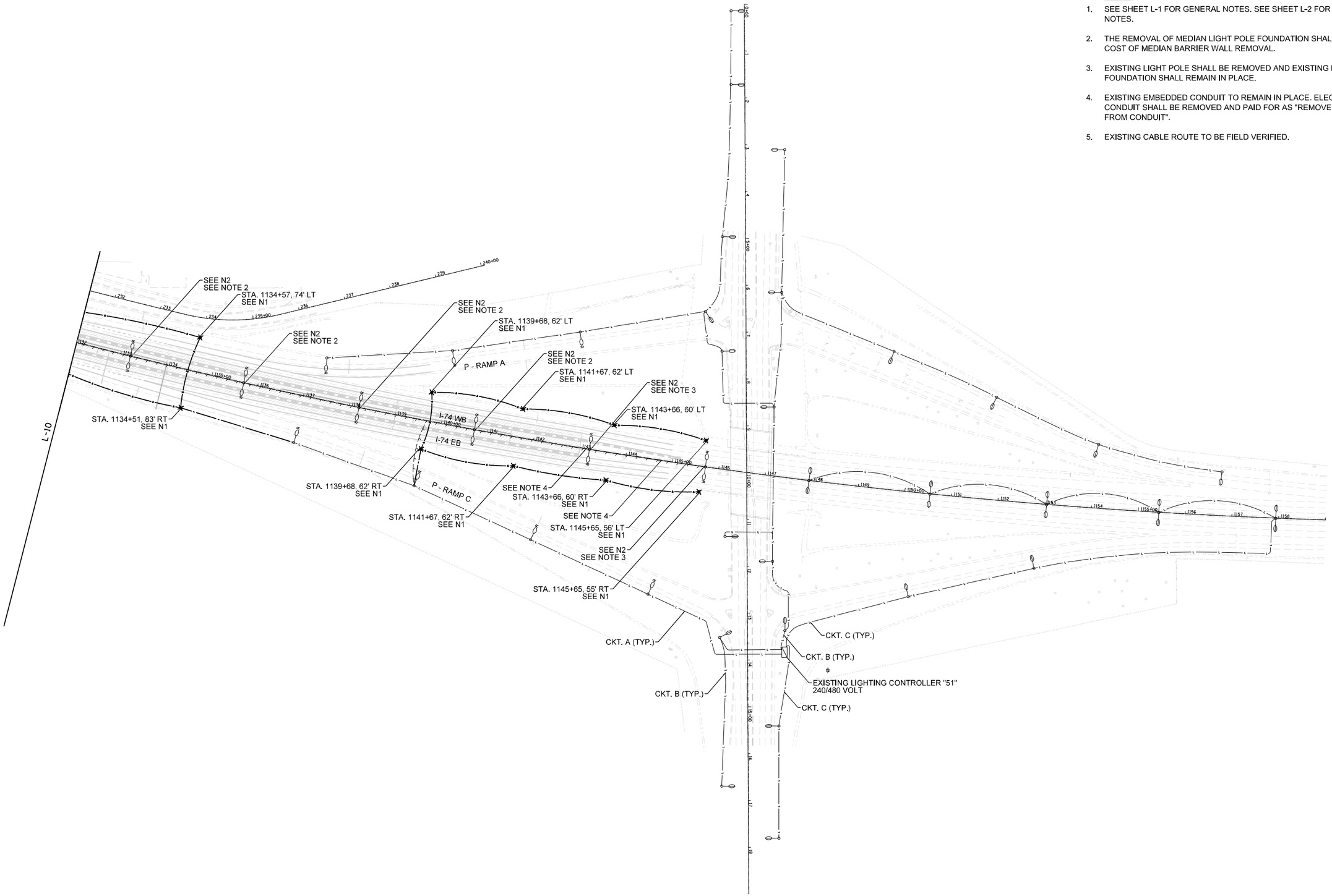

L-11

FILE NAME = D570C01-remlightStage1-6.dgn	USER NAME = bbarr	DESIGNED -	REVISED -	STATE OF ILLINOIS DEPARTMENT OF TRANSPORTATION	TEMPORARY LIGHTING AND REMOVAL PLAN I-74 STAGE 1	F.A.I. RTE.	SECTION	COUNTY	TOTAL SHEETS	SHEET NO.
		DRAWN -	REVISED -			57	10-(33,34,5,14)R & (10-34)B	CHAMPAIGN	1182	835
	PLOT SCALE = 200.0000 ' / in.	CHECKED -	REVISED -					CONTRACT NO. 70C01		
	PLOT DATE = 1/27/2022	DATE -	REVISED -		SCALE: 1"=100' SHEET 11 OF 58 SHEETS STA. TO STA.		ILLINOIS FED. AID PROJECT			

NOTES:

1. SEE SHEET L-1 FOR GENERAL NOTES. SEE SHEET L-2 FOR LIGHTING STAGING NOTES.

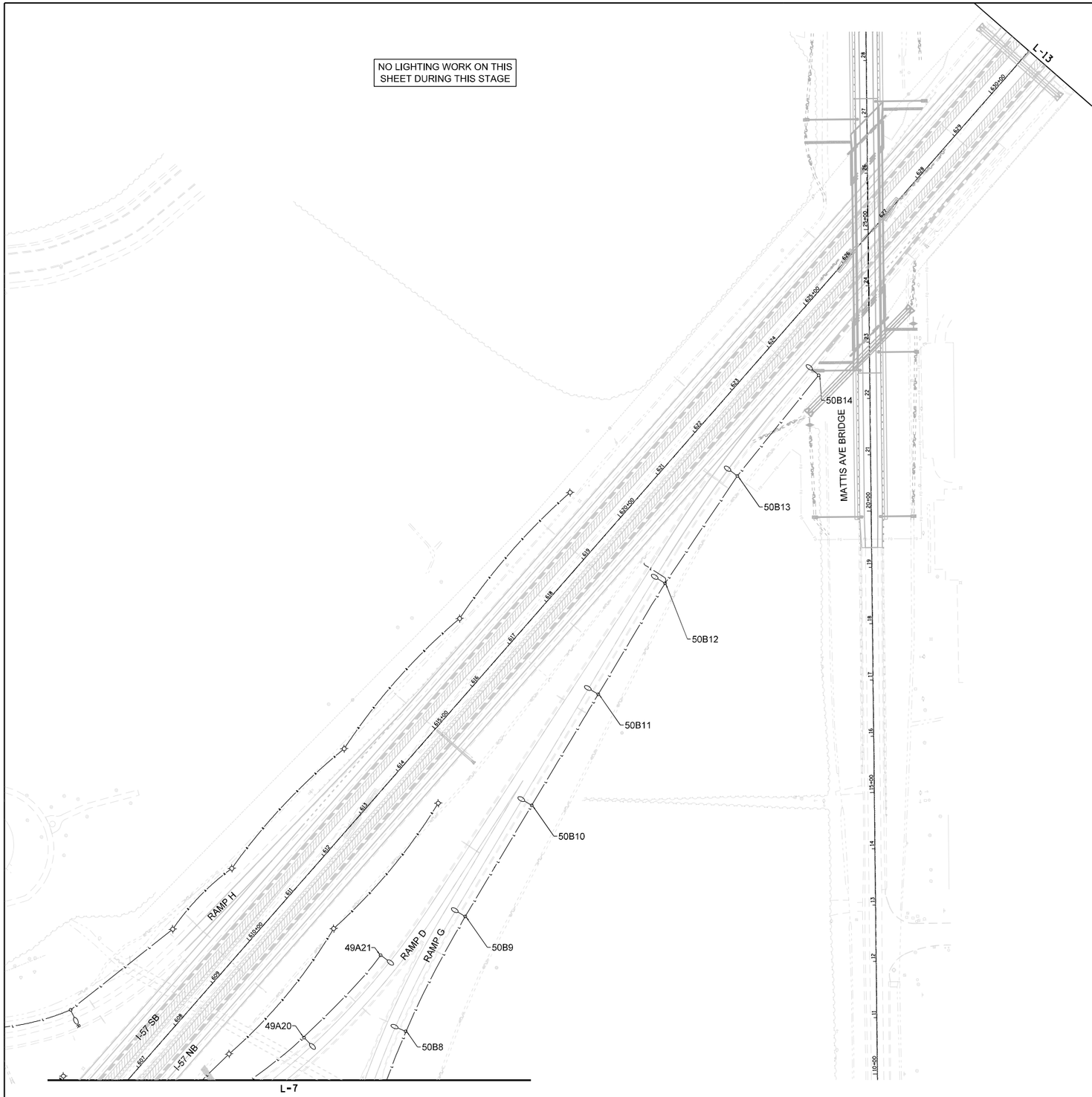

L-12

FILE NAME = D570C01-remlightStage1-7.dgn	USER NAME = bbarr	DESIGNED -	REVISED -	STATE OF ILLINOIS DEPARTMENT OF TRANSPORTATION	TEMPORARY LIGHTING AND REMOVAL PLAN I-57 STAGE 5	F.A.I. RTE.	SECTION	COUNTY	TOTAL SHEETS / SHEET NO.
		DRAWN -	REVISED -			57	10-(33,34,5,14)R & (10-34)B	CHAMPAIGN	1182 / 836
	PLOT SCALE = 200.0000 ' / in.	CHECKED -	REVISED -					CONTRACT NO. 70C01	
	PLOT DATE = 1/27/2022	DATE -	REVISED -		SCALE: 1"=100' / SHEET 12 OF 58 SHEETS / STA. / TO STA.		ILLINOIS FED. AID PROJECT		

NOTES:

1. SEE SHEET L-1 FOR GENERAL NOTES. SEE SHEET L-2 FOR LIGHTING STAGING NOTES.

NO LIGHTING WORK ON THIS SHEET DURING THIS STAGE

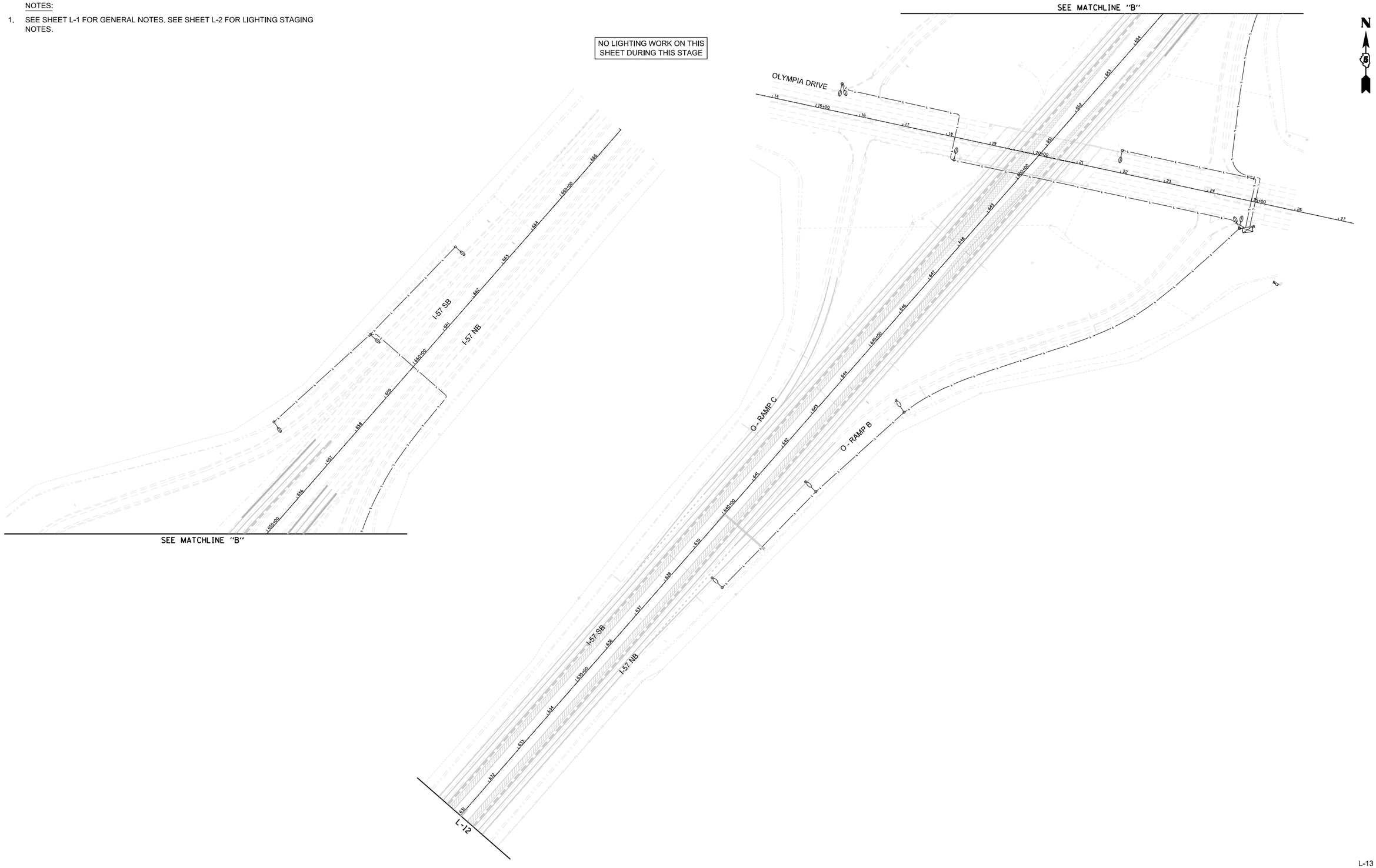

L-13

FILE NAME = D570C01-remlightStage1-8.dgn	USER NAME = bbarr	DESIGNED -	REVISED -	STATE OF ILLINOIS DEPARTMENT OF TRANSPORTATION	TEMPORARY LIGHTING AND REMOVAL PLAN I-57 STAGE 5			F.A.I. RTE.	SECTION	COUNTY	TOTAL SHEETS / SHEET NO.
		DRAWN -	REVISED -					57	10-(33,34,5,14)R & (10-34)B	CHAMPAIGN	1182 / 837
	PLOT SCALE = 200.0000 ' / in.	CHECKED -	REVISED -							CONTRACT NO. 70C01	
	PLOT DATE = 1/27/2022	DATE -	REVISED -		SCALE: 1"=100'	SHEET 13 OF 58 SHEETS	STA. TO STA.		ILLINOIS	FED. AID PROJECT	

NOTES:

1. SEE SHEET L-1 FOR GENERAL NOTES. SEE SHEET L-2 FOR LIGHTING STAGING NOTES.

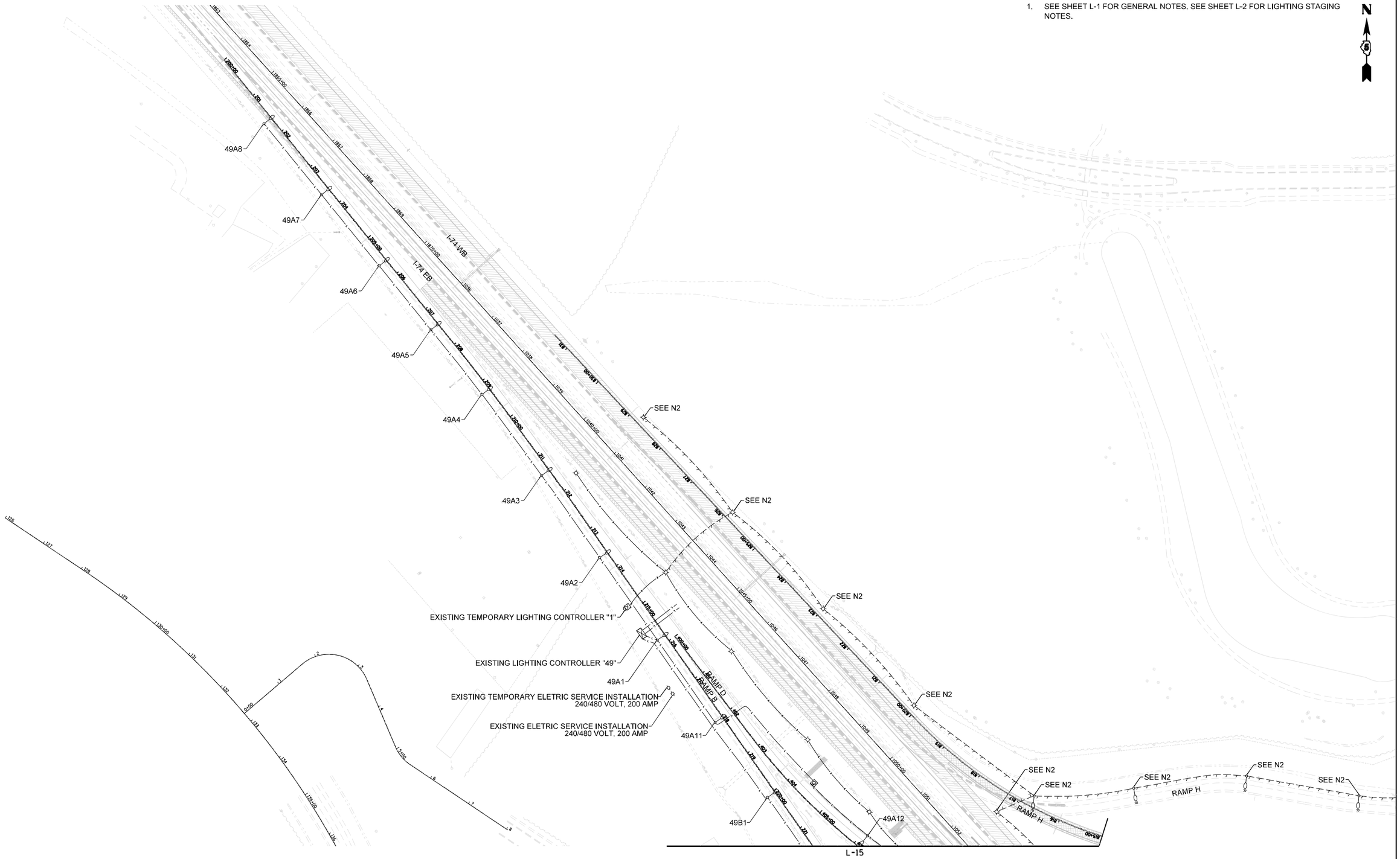

FILE NAME = D570C01-remlightStage2-1.dgn	USER NAME = bbarr	DESIGNED -	REVISED -	STATE OF ILLINOIS DEPARTMENT OF TRANSPORTATION	TEMPORARY LIGHTING AND REMOVAL PLAN I-74 STAGE 2	F.A.I. RTE.	SECTION	COUNTY	TOTAL SHEETS	SHEET NO.
		DRAWN -	REVISED -			57	10-(33,34,5,14)R & (10-34)B	CHAMPAIGN	1182	838
	PLOT SCALE = 200.0000 ' / in.	CHECKED -	REVISED -					CONTRACT NO. 70C01		
	PLOT DATE = 1/27/2022	DATE -	REVISED -		SCALE: 1"=100' SHEET 14 OF 58 SHEETS STA. TO STA.		ILLINOIS FED. AID PROJECT			

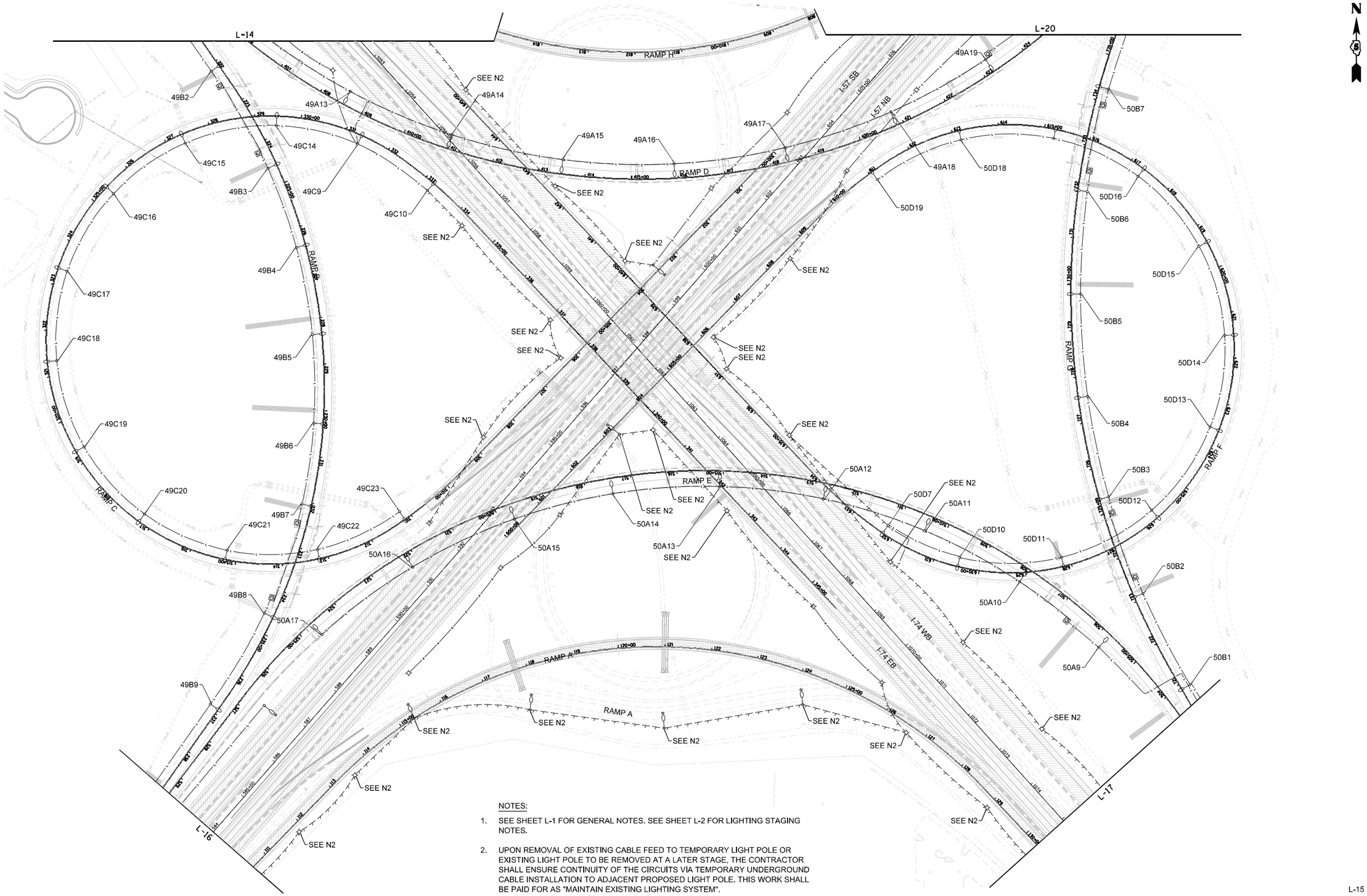

NOTES:

1. SEE SHEET L-1 FOR GENERAL NOTES. SEE SHEET L-2 FOR LIGHTING STAGING NOTES.

2. UPON REMOVAL OF EXISTING CABLE FEED TO TEMPORARY LIGHT POLE OR EXISTING LIGHT POLE TO BE REMOVED AT A LATER STAGE, THE CONTRACTOR SHALL ENSURE CONTINUITY OF THE CIRCUITS VIA TEMPORARY UNDERGROUND CABLE INSTALLATION TO ADJACENT PROPOSED LIGHT POLE. THIS WORK SHALL BE PAID FOR AS "MAINTAIN EXISTING LIGHTING SYSTEM".

FILE NAME = D570C01-remlightStage2-2.dgn	USER NAME = bbarr	DESIGNED -	REVISED -
		DRAWN -	REVISED -
	PLOT SCALE = 200.0000 ' / in.	CHECKED -	REVISED -
	PLOT DATE = 1/27/2022	DATE -	REVISED -

STATE OF ILLINOIS
DEPARTMENT OF TRANSPORTATION

TEMPORARY LIGHTING AND REMOVAL PLAN
I-74 STAGE 2 AND I-57 STAGE 6

SCALE: 1"=100' | SHEET 15 OF 58 SHEETS | STA. TO STA.

F.A.I. RTE.	SECTION	COUNTY	TOTAL SHEETS	SHEET NO.
57	10-(33,34,5,14)R & (10-34)B	CHAMPAIGN	1182	839
		CONTRACT NO. 70C01		
		ILLINOIS FED. AID PROJECT		

NOTES:

1. SEE SHEET L-1 FOR GENERAL NOTES. SEE SHEET L-2 FOR LIGHTING STAGING NOTES.

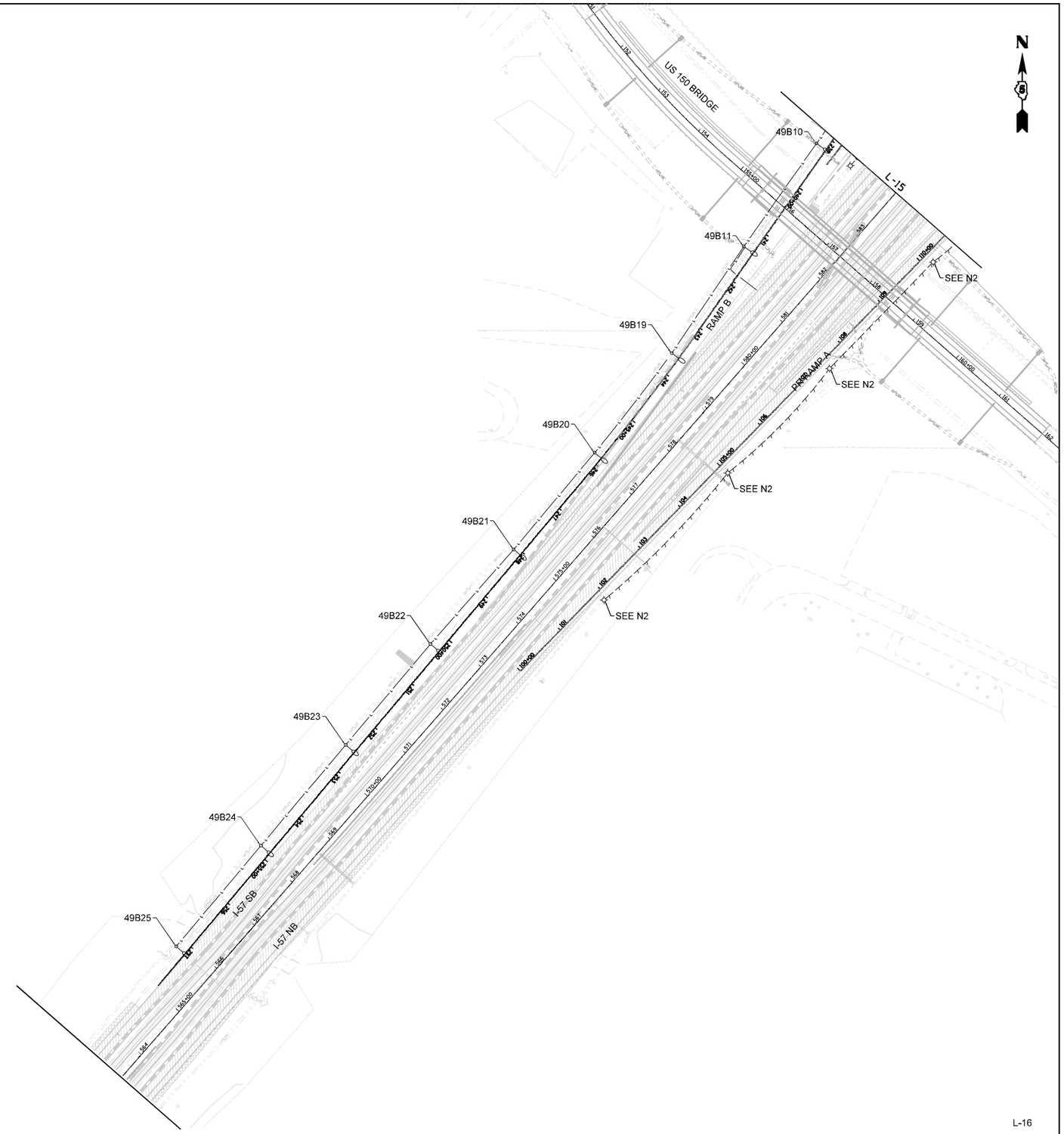

L-16

FILE NAME = D570C01-remlightStage2-3.dgn	USER NAME = bbarr	DESIGNED -	REVISED -	STATE OF ILLINOIS DEPARTMENT OF TRANSPORTATION	TEMPORARY LIGHTING AND REMOVAL PLAN I-57 STAGE 6	F.A.I. RTE.	SECTION	COUNTY	TOTAL SHEETS	SHEET NO.
		DRAWN -	REVISED -			57	10-(33,34,5,14)R & (10-34)B	CHAMPAIGN	1182	840
	PLOT SCALE = 200.0000 ' / in.	CHECKED -	REVISED -					CONTRACT NO. 70C01		
	PLOT DATE = 1/27/2022	DATE -	REVISED -		SCALE: 1"=100' SHEET 16 OF 58 SHEETS STA. TO STA.		ILLINOIS	FED. AID PROJECT		

NOTES:

1. SEE SHEET L-1 FOR GENERAL NOTES. SEE SHEET L-2 FOR LIGHTING STAGING NOTES.

2. UPON REMOVAL OF EXISTING CABLE FEED TO TEMPORARY LIGHT POLE OR EXISTING LIGHT POLE TO BE REMOVED AT A LATER STAGE, THE CONTRACTOR SHALL ENSURE CONTINUITY OF THE CIRCUITS VIA TEMPORARY UNDERGROUND CABLE INSTALLATION TO ADJACENT PROPOSED LIGHT POLE. THIS WORK SHALL BE PAID FOR AS "MAINTAIN EXISTING LIGHTING SYSTEM".

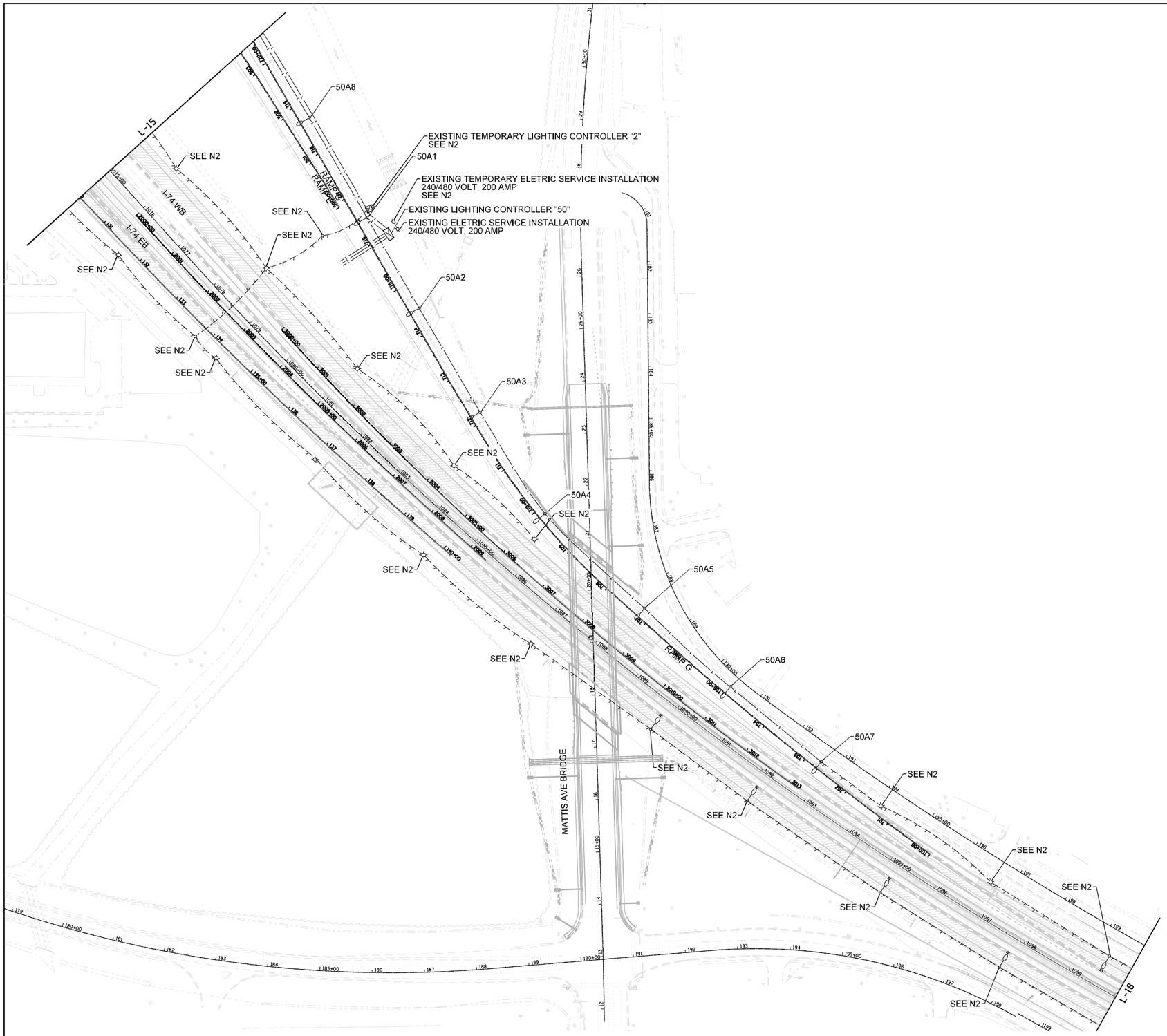

L-17

FILE NAME = D570C01-remlightStage2-4.dgn	USER NAME = bbarr	DESIGNED -	REVISED -	STATE OF ILLINOIS DEPARTMENT OF TRANSPORTATION	TEMPORARY LIGHTING AND REMOVAL PLAN I-74 STAGE 2	F.A.I. RTE.	SECTION	COUNTY	TOTAL SHEETS / SHEET NO.
		DRAWN -	REVISED -			57	10-(33,34,5,14)R & (10-34)B	CHAMPAIGN	1182 / 841
	PLOT SCALE = 200.0000 ' / in.	CHECKED -	REVISED -					CONTRACT NO. 70C01	
	PLOT DATE = 1/27/2022	DATE -	REVISED -		SCALE: 1"=100' / SHEET 17 OF 58 SHEETS / STA. TO STA.		ILLINOIS FED. AID PROJECT		

NOTES:

1. SEE SHEET L-1 FOR GENERAL NOTES. SEE SHEET L-2 FOR LIGHTING STAGING NOTES.

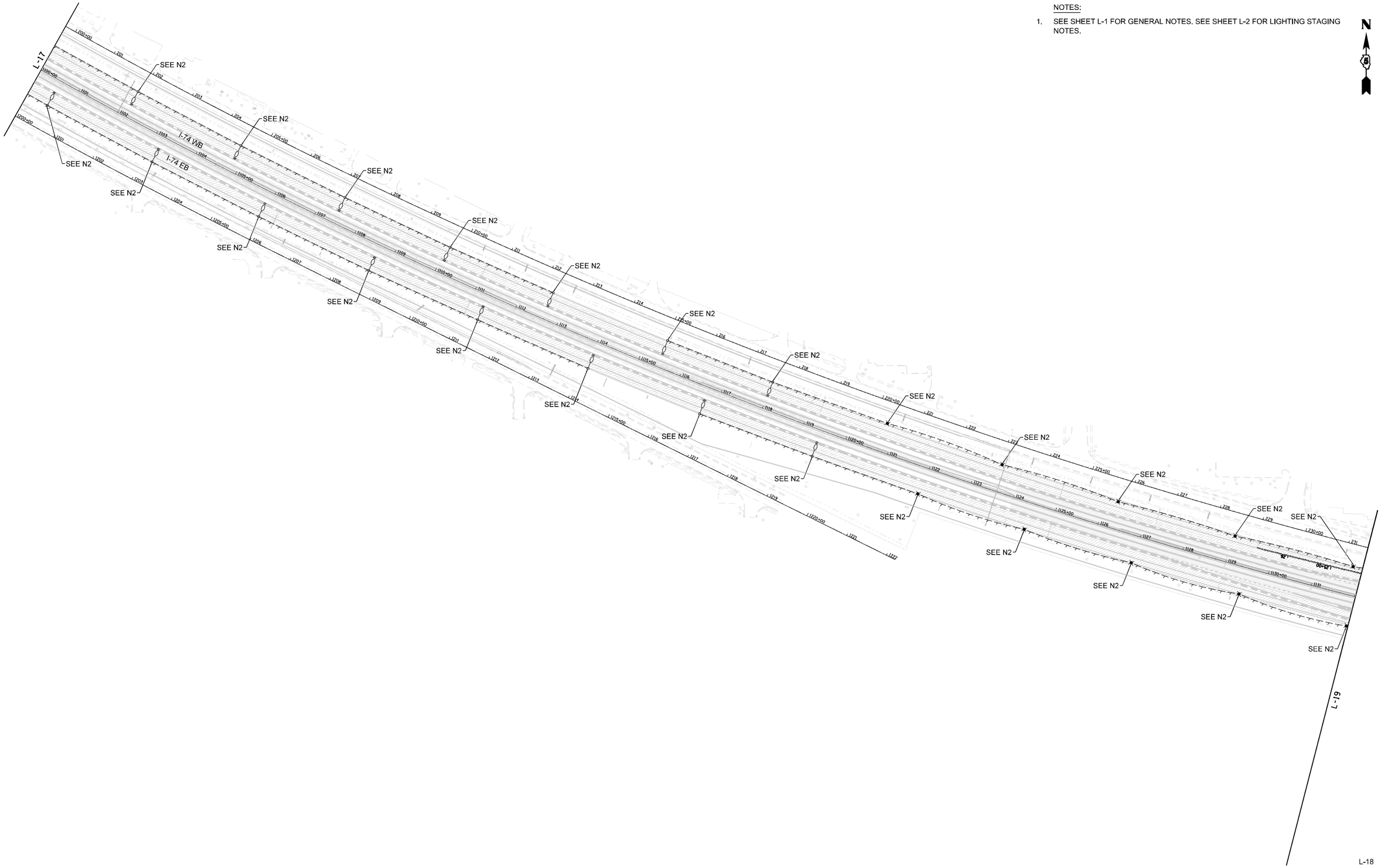

L-18

FILE NAME = D570C01-remlightStage2-5.dgn	USER NAME = bbarr	DESIGNED -	REVISED -
		DRAWN -	REVISED -
	PLOT SCALE = 200.0000 ' / in.	CHECKED -	REVISED -
	PLOT DATE = 1/27/2022	DATE -	REVISED -

STATE OF ILLINOIS
DEPARTMENT OF TRANSPORTATION

TEMPORARY LIGHTING AND REMOVAL PLAN
I-74 STAGE 2

SCALE: 1"=100' | SHEET 18 OF 58 SHEETS | STA. TO STA.

F.A.I. RTE.	SECTION	COUNTY	TOTAL SHEETS	SHEET NO.
57	10-(33,34,5,14)R & (10-34)B	CHAMPAIGN	1182	842
		CONTRACT NO. 70C01		
		ILLINOIS FED. AID PROJECT		

NOTES:

1. SEE SHEET L-1 FOR GENERAL NOTES. SEE SHEET L-2 FOR LIGHTING STAGING NOTES.
2. EXISTING CABLE ROUTE TO BE FIELD VERIFIED.
3. THE CONTRACTOR SHALL INTERCEPT EXISTING CONDUIT WITH NEW 1" DIA. CNC AND RUN CONDUIT TO THE WOOD POLE. ROUTE EXISTING CABLE THROUGH CONDUIT TO WOOD POLE.

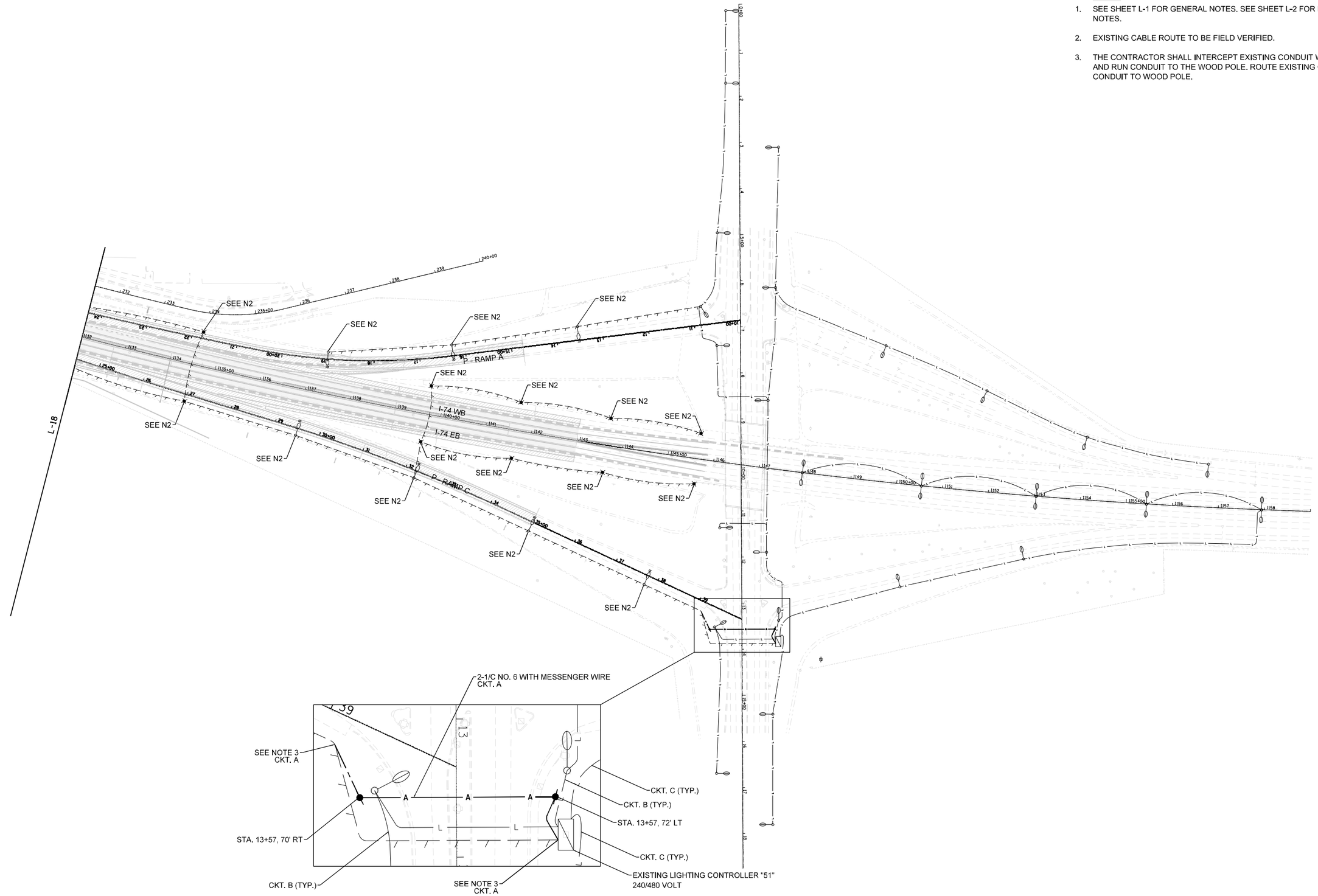

L-19

FILE NAME = D570C01-remlightStage2-6.dgn	USER NAME = bbarr	DESIGNED -	REVISED -	STATE OF ILLINOIS DEPARTMENT OF TRANSPORTATION	TEMPORARY LIGHTING AND REMOVAL PLAN I-74 STAGE 2	F.A.I. RTE.	SECTION	COUNTY	TOTAL SHEETS	SHEET NO.
		DRAWN -	REVISED -			57	10-(33,34,5,14)R & (10-34)B	CHAMPAIGN	1182	843
	PLOT SCALE = 200.0000 ' / in.	CHECKED -	REVISED -					CONTRACT NO. 70C01		
	PLOT DATE = 1/27/2022	DATE -	REVISED -		SCALE: 1"=100' SHEET 19 OF 58 SHEETS STA. TO STA.		ILLINOIS FED. AID PROJECT			

NOTES:

1. SEE SHEET L-1 FOR GENERAL NOTES. SEE SHEET L-2 FOR LIGHTING STAGING NOTES.

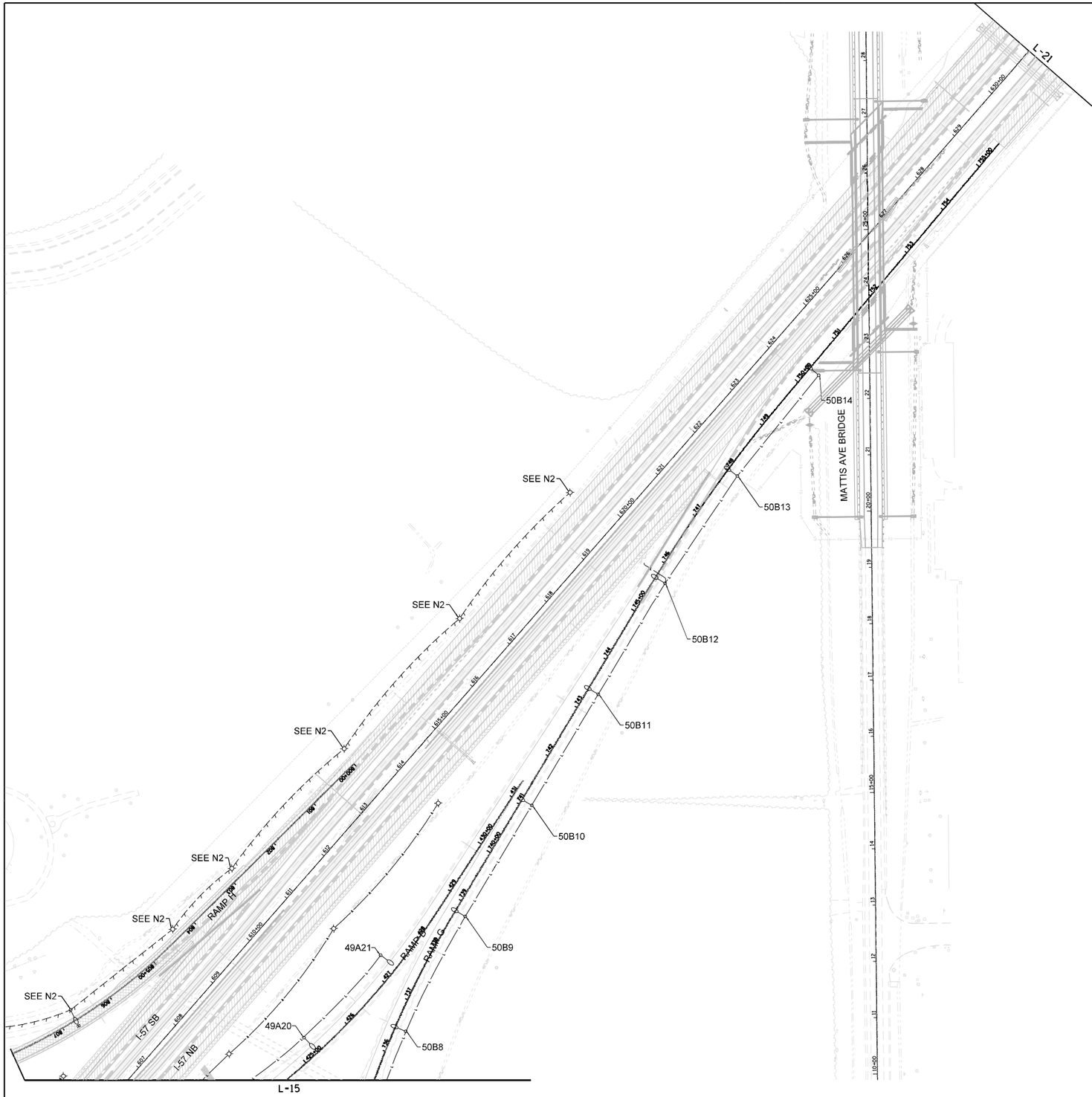

L-20

FILE NAME = D570C01-remlightStage2-7.dgn	USER NAME = bbarr	DESIGNED -	REVISED -
		DRAWN -	REVISED -
	PLOT SCALE = 200.0000 ' / in.	CHECKED -	REVISED -
	PLOT DATE = 1/27/2022	DATE -	REVISED -

STATE OF ILLINOIS
DEPARTMENT OF TRANSPORTATION

TEMPORARY LIGHTING AND REMOVAL PLAN
I-57 STAGE 6

SCALE: 1"=100' | SHEET 20 OF 58 SHEETS | STA. TO STA.

F.A.I. RTE.	SECTION	COUNTY	TOTAL SHEETS	SHEET NO.
57	10-(33,34,5,14)R & (10-34)B	CHAMPAIGN	1182	844
		CONTRACT NO. 70C01		
	ILLINOIS FED. AID PROJECT			

NOTES:

1. SEE SHEET L-1 FOR GENERAL NOTES. SEE SHEET L-2 FOR LIGHTING STAGING NOTES.
2. EXISTING CABLE ROUTE TO BE FIELD VERIFIED.
3. THE CONTRACTOR SHALL INTERCEPT EXISTING CONDUIT WITH NEW 1" DIA. CNC AND RUN CONDUIT TO THE WOOD POLE. ROUTE EXISTING CABLE THROUGH CONDUIT TO WOOD POLE.

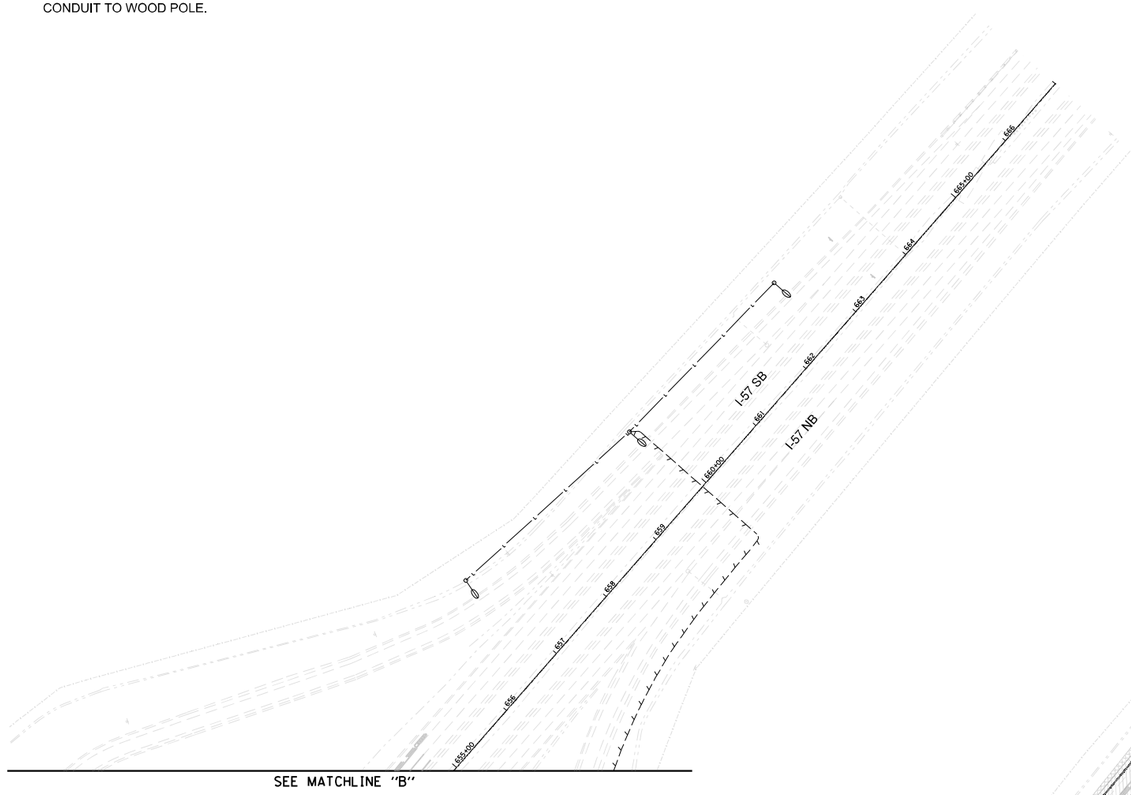

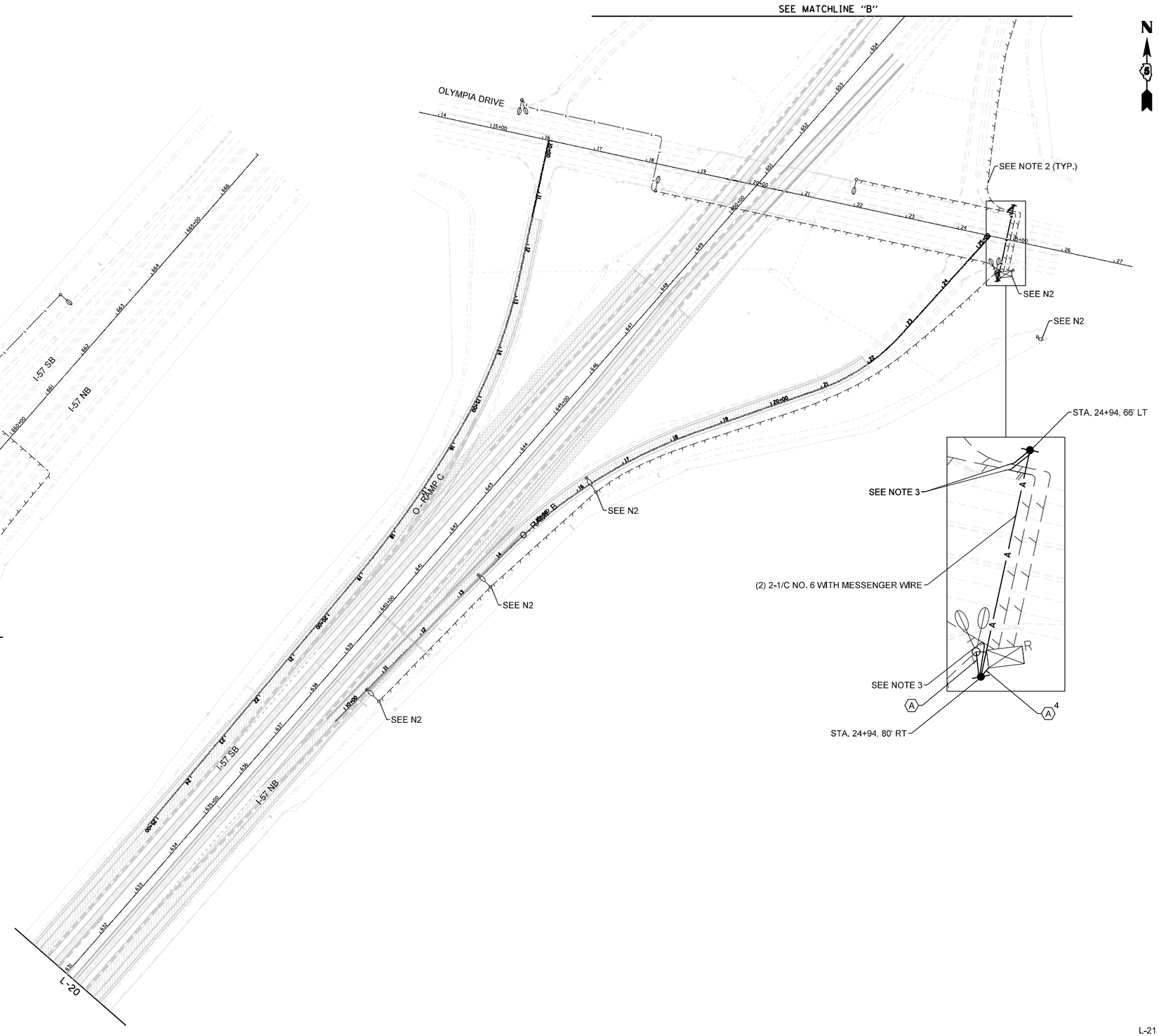

L-21

FILE NAME = D570C01-remlightStage2-8.dgn	USER NAME = bbarr	DESIGNED -	REVISED -	STATE OF ILLINOIS DEPARTMENT OF TRANSPORTATION	TEMPORARY LIGHTING AND REMOVAL PLAN I-57 STAGE 6	F.A.I. RTE.	SECTION	COUNTY	TOTAL SHEETS	SHEET NO.
		DRAWN -	REVISED -			57	10-(33,34,5,14)R & (10-34)B	CHAMPAIGN	1182	845
	PLOT SCALE = 200.0000 ' / in.	CHECKED -	REVISED -					CONTRACT NO. 70C01		
	PLOT DATE = 1/27/2022	DATE -	REVISED -		SCALE: 1"=100' SHEET 21 OF 58 SHEETS STA. TO STA.		ILLINOIS FED. AID PROJECT			

NOTES:

1. SEE SHEET L-1 FOR GENERAL NOTES. SEE SHEET L-2 FOR LIGHTING STAGING NOTES.

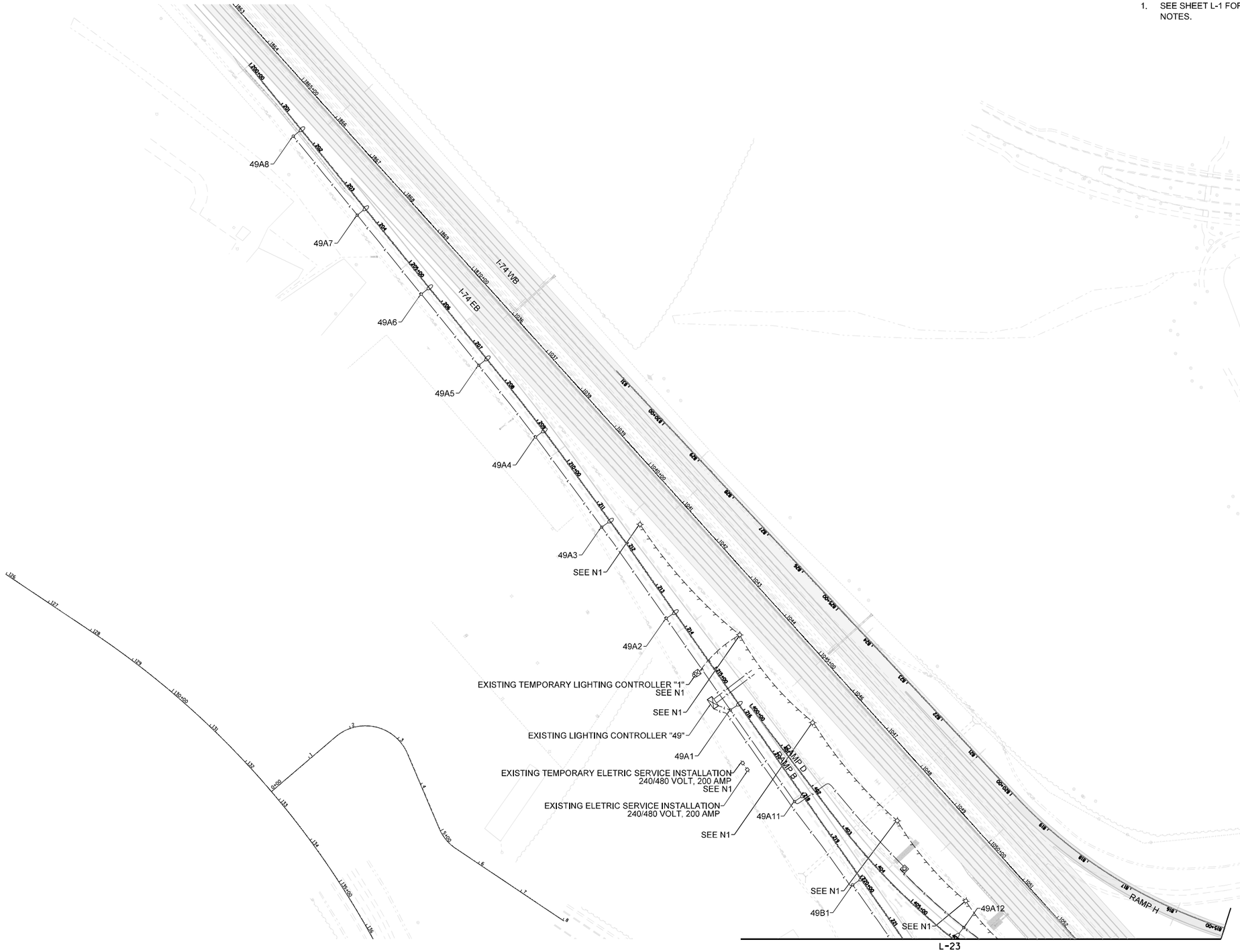

L-22

FILE NAME = D570C01-remlightStage4-1.dgn	USER NAME = bbarr	DESIGNED -	REVISED -	STATE OF ILLINOIS DEPARTMENT OF TRANSPORTATION	TEMPORARY LIGHTING AND REMOVAL PLAN I-74 STAGE 4	F.A.I. RTE.	SECTION	COUNTY	TOTAL SHEETS	SHEET NO.
		DRAWN -	REVISED -			57	10-(33,34,5,14)R & (10-34)B	CHAMPAIGN	1182	846
	PLOT SCALE = 200.0000 ' / in.	CHECKED -	REVISED -					CONTRACT NO. 70C01		
	PLOT DATE = 1/27/2022	DATE -	REVISED -		SCALE: 1"=100' SHEET 22 OF 58 SHEETS STA. TO STA.		ILLINOIS FED. AID PROJECT			

NOTES:

1. SEE SHEET L-1 FOR GENERAL NOTES. SEE SHEET L-2 FOR LIGHTING STAGING NOTES.

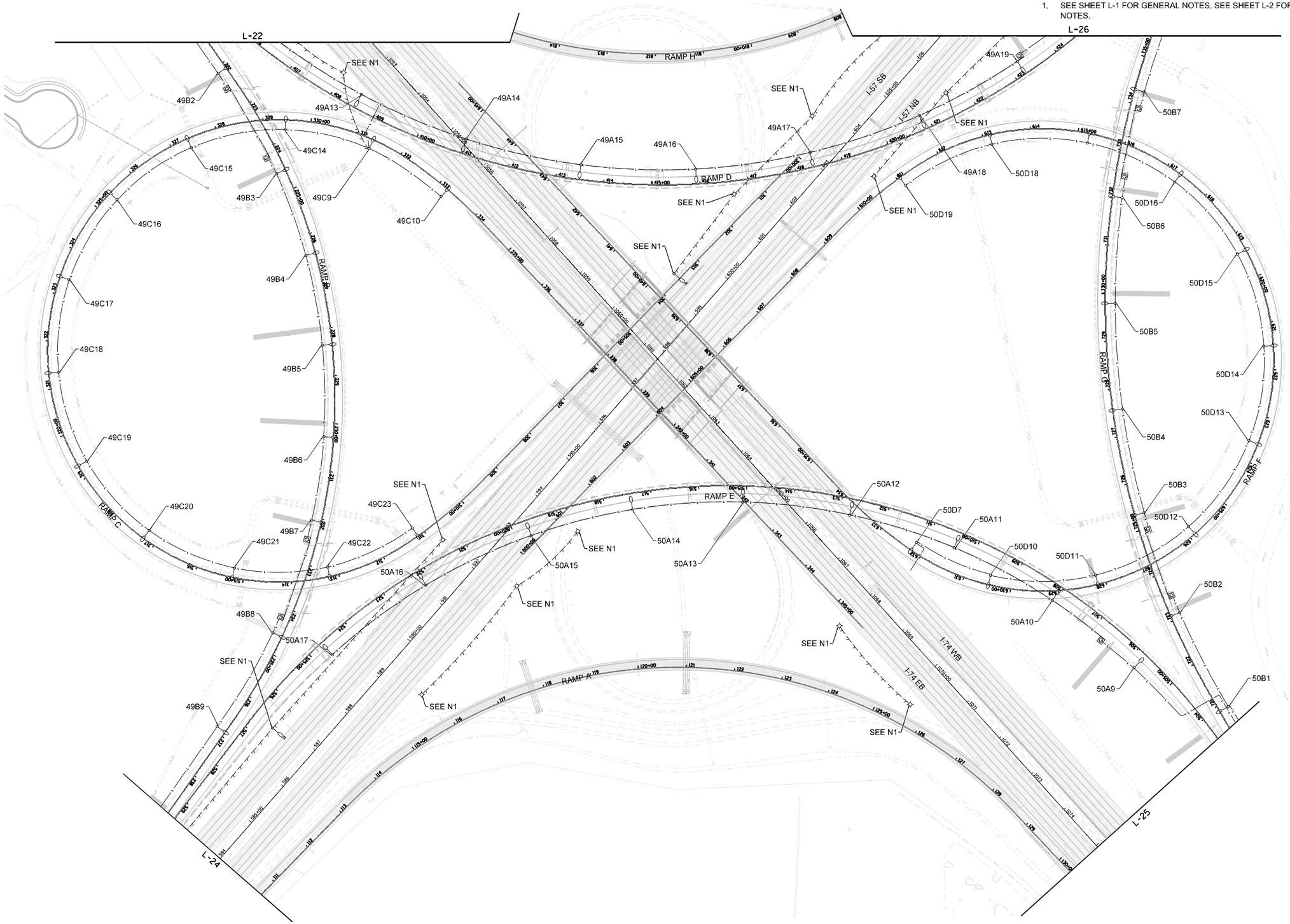

L-23

FILE NAME = D570C01-remlightStage4-2.dgn	USER NAME = bbarr	DESIGNED -	REVISED -	STATE OF ILLINOIS DEPARTMENT OF TRANSPORTATION	TEMPORARY LIGHTING AND REMOVAL PLAN I-74 STAGE 4 AND I-57 STAGE 8	F.A.I. RTE.	SECTION	COUNTY	TOTAL SHEETS / SHEET NO.
		DRAWN -	REVISED -			57	10-(33,34,5,14)R & (10-34)B	CHAMPAIGN	1182 / 847
	PLOT SCALE = 200.0000 ' / in.	CHECKED -	REVISED -					CONTRACT NO. 70C01	
	PLOT DATE = 2/27/2022	DATE -	REVISED -		SCALE: 1"=100' / SHEET 23 OF 58 SHEETS / STA. TO STA.		ILLINOIS FED. AID PROJECT		

NOTES:

1. SEE SHEET L-1 FOR GENERAL NOTES. SEE SHEET L-2 FOR LIGHTING STAGING NOTES.

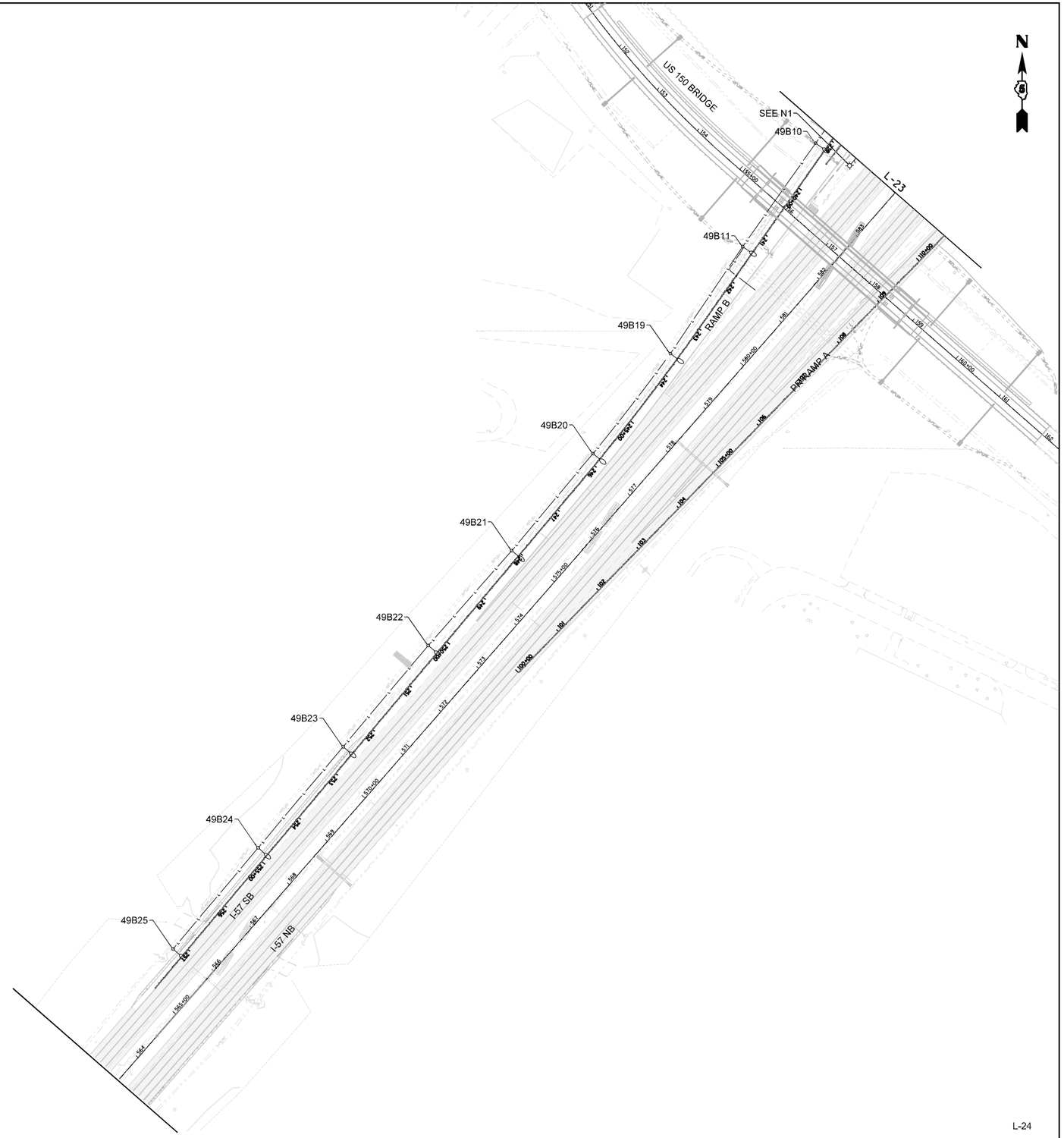

FILE NAME = D570C01-remlightStage4-3.dgn	USER NAME = bbarr	DESIGNED -	REVISED -
		DRAWN -	REVISED -
	PLOT SCALE = 200.0000 ' / in.	CHECKED -	REVISED -
	PLOT DATE = 1/27/2022	DATE -	REVISED -

STATE OF ILLINOIS
DEPARTMENT OF TRANSPORTATION

TEMPORARY LIGHTING AND REMOVAL PLAN
I-57 STAGE 8

SCALE: 1"=100' | SHEET 24 OF 58 SHEETS | STA. TO STA.

F.A.I. RTE.	SECTION	COUNTY	TOTAL SHEETS	SHEET NO.
57	10-(33,34,5,14)R & (10-34)B	CHAMPAIGN	1182	848
		CONTRACT NO. 70C01		
	ILLINOIS	FED. AID PROJECT		

NOTES:

1. SEE SHEET L-1 FOR GENERAL NOTES. SEE SHEET L-2 FOR LIGHTING STAGING NOTES.

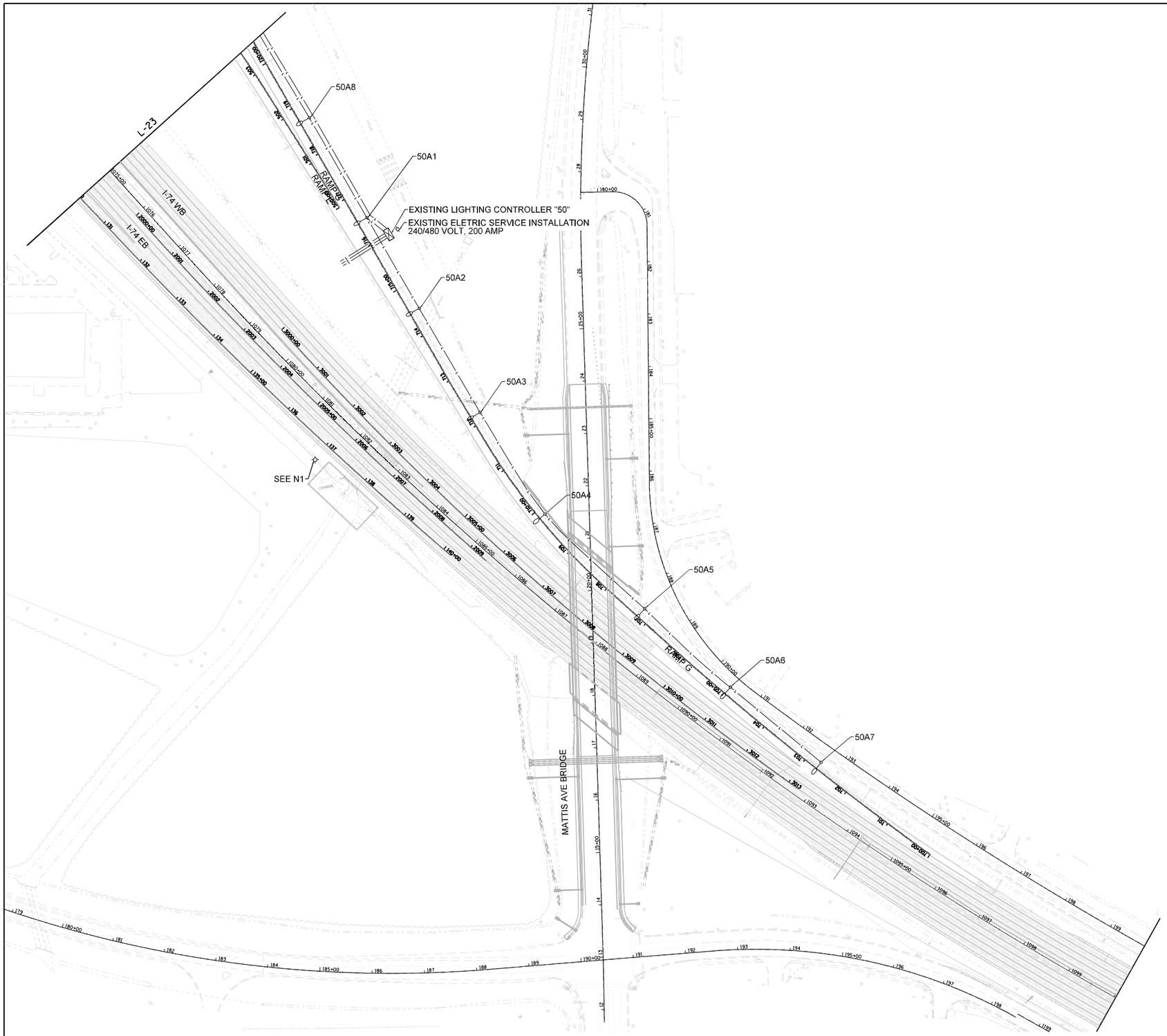

L-25

FILE NAME = D570C01-remlightStage4-4.dgn	USER NAME = bbarr	DESIGNED -	REVISED -	STATE OF ILLINOIS DEPARTMENT OF TRANSPORTATION	TEMPORARY LIGHTING AND REMOVAL PLAN I-74 STAGE 4	F.A.I. RTE.	SECTION	COUNTY	TOTAL SHEETS / SHEET NO.
		DRAWN -	REVISED -			57	10-(33,34,5,14)R & (10-34)B	CHAMPAIGN	1182 / 849
	PLOT SCALE = 200.0000 ' / in.	CHECKED -	REVISED -					CONTRACT NO. 70C01	
	PLOT DATE = 1/27/2022	DATE -	REVISED -		SCALE: 1"=100' SHEET 25 OF 58 SHEETS STA. TO STA.		ILLINOIS FED. AID PROJECT		

NOTES:

1. SEE SHEET L-1 FOR GENERAL NOTES. SEE SHEET L-2 FOR LIGHTING STAGING NOTES.

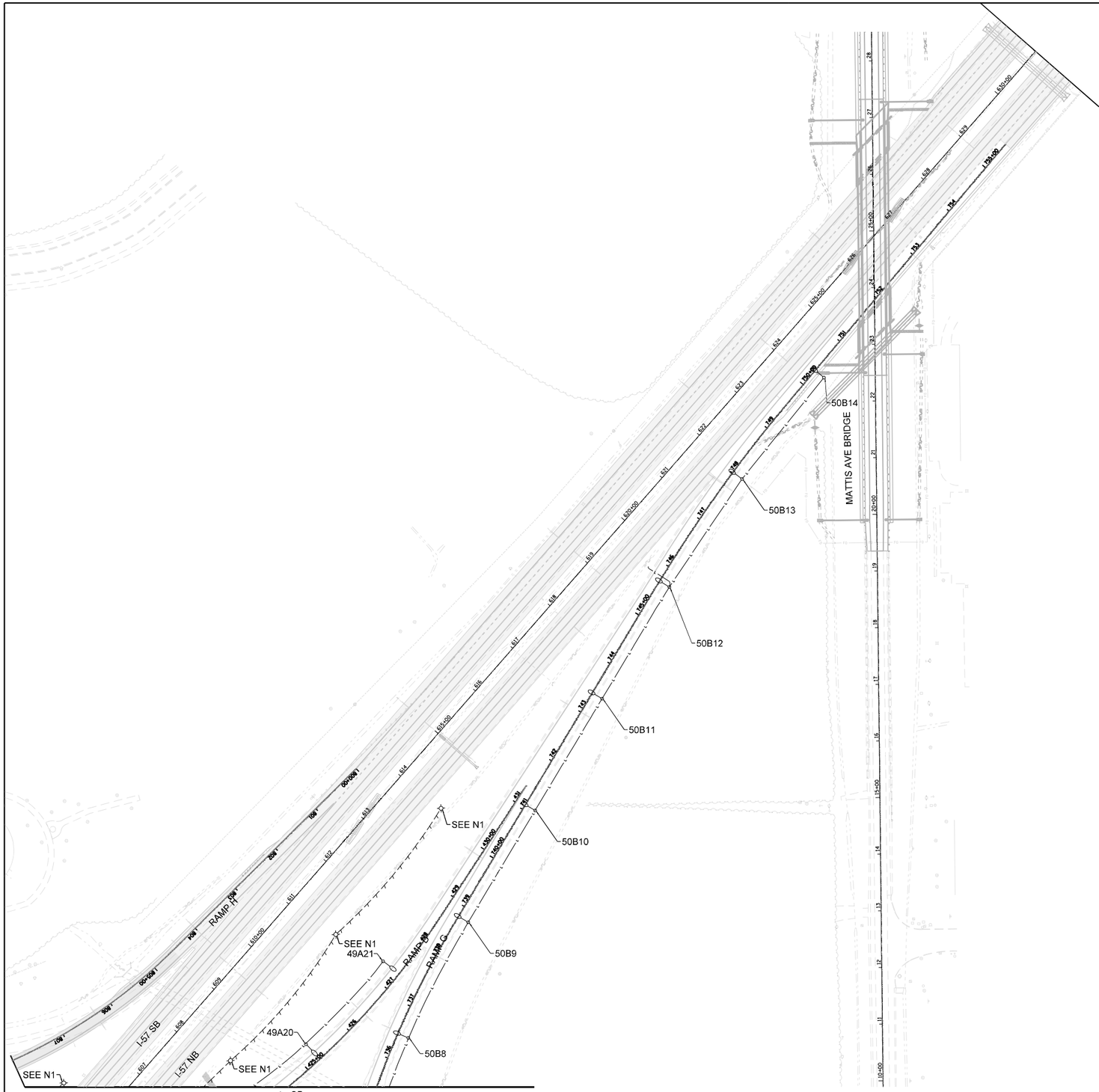

L-23

L-26

FILE NAME = D570C01-remlightStage4-7.dgn	USER NAME = bbarr	DESIGNED -	REVISED -	STATE OF ILLINOIS DEPARTMENT OF TRANSPORTATION	TEMPORARY LIGHTING AND REMOVAL PLAN I-57 STAGE 8	F.A.I. RTE.	SECTION	COUNTY	TOTAL SHEETS / SHEET NO.
		DRAWN -	REVISED -			57	10-(33,34,5,14)R & (10-34)B	CHAMPAIGN	1182 / 850
	PLOT SCALE = 200.0000 ' / in.	CHECKED -	REVISED -					CONTRACT NO. 70C01	
	PLOT DATE = 1/27/2022	DATE -	REVISED -		SCALE: 1"=100' SHEET 26 OF 58 SHEETS STA. TO STA.		ILLINOIS FED. AID PROJECT		

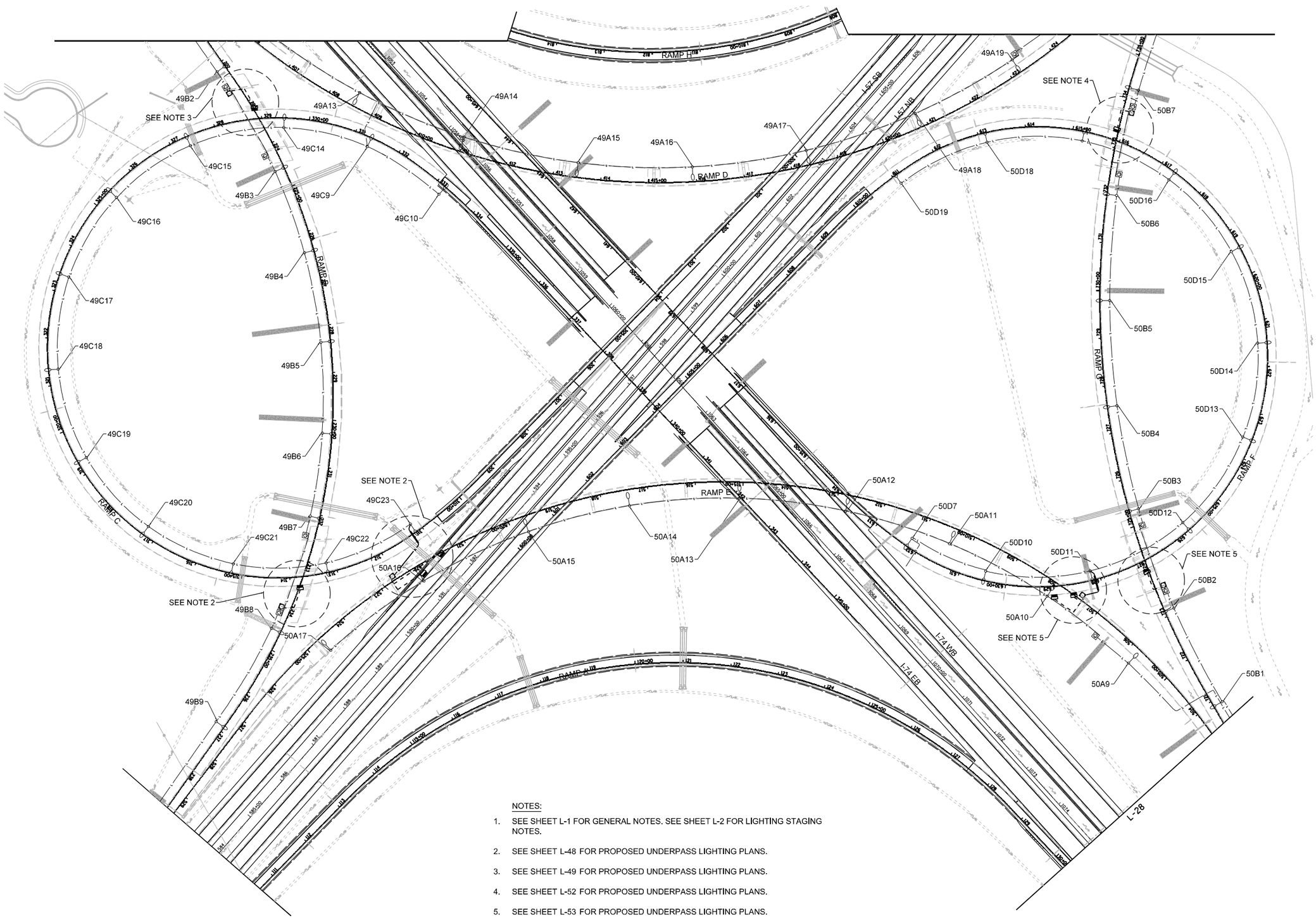

NOTES:

1. SEE SHEET L-1 FOR GENERAL NOTES. SEE SHEET L-2 FOR LIGHTING STAGING NOTES.
2. SEE SHEET L-48 FOR PROPOSED UNDERPASS LIGHTING PLANS.
3. SEE SHEET L-49 FOR PROPOSED UNDERPASS LIGHTING PLANS.
4. SEE SHEET L-52 FOR PROPOSED UNDERPASS LIGHTING PLANS.
5. SEE SHEET L-53 FOR PROPOSED UNDERPASS LIGHTING PLANS.

FILE NAME = D570C01-lightStage1-2.dgn	USER NAME = bbarr	DESIGNED -	REVISED -	STATE OF ILLINOIS DEPARTMENT OF TRANSPORTATION	PROPOSED LIGHTING PLAN I-74 STAGE 1 AND I-57 STAGE 5	F.A.I. RTE.	SECTION	COUNTY	TOTAL SHEETS	SHEET NO.
		DRAWN -	REVISED -			57	10-(33,34,5,14)R & (10-34)B	CHAMPAIGN	1182	851
	PLOT SCALE = 200.0000 ' / in.	CHECKED -	REVISED -					CONTRACT NO. 70C01		
	PLOT DATE = 2/27/2022	DATE -	REVISED -		SCALE: 1"=100' / SHEET 27 OF 58 SHEETS / STA. TO STA.		ILLINOIS FED. AID PROJECT			

NOTES:

1. SEE SHEET L-1 FOR GENERAL NOTES. SEE SHEET L-2 FOR LIGHTING STAGING NOTES.
2. THE CONTRACTOR SHALL STAGE INSTALLATION OF CONDUIT AND PROVIDE STUB-UP, AS NECESSARY, NO UNDERGROUND SPLICING OF CABLING WILL BE PERMITTED.
3. SEE SHEET L-44 FOR PROPOSED UNDERPASS LIGHTING PLANS.

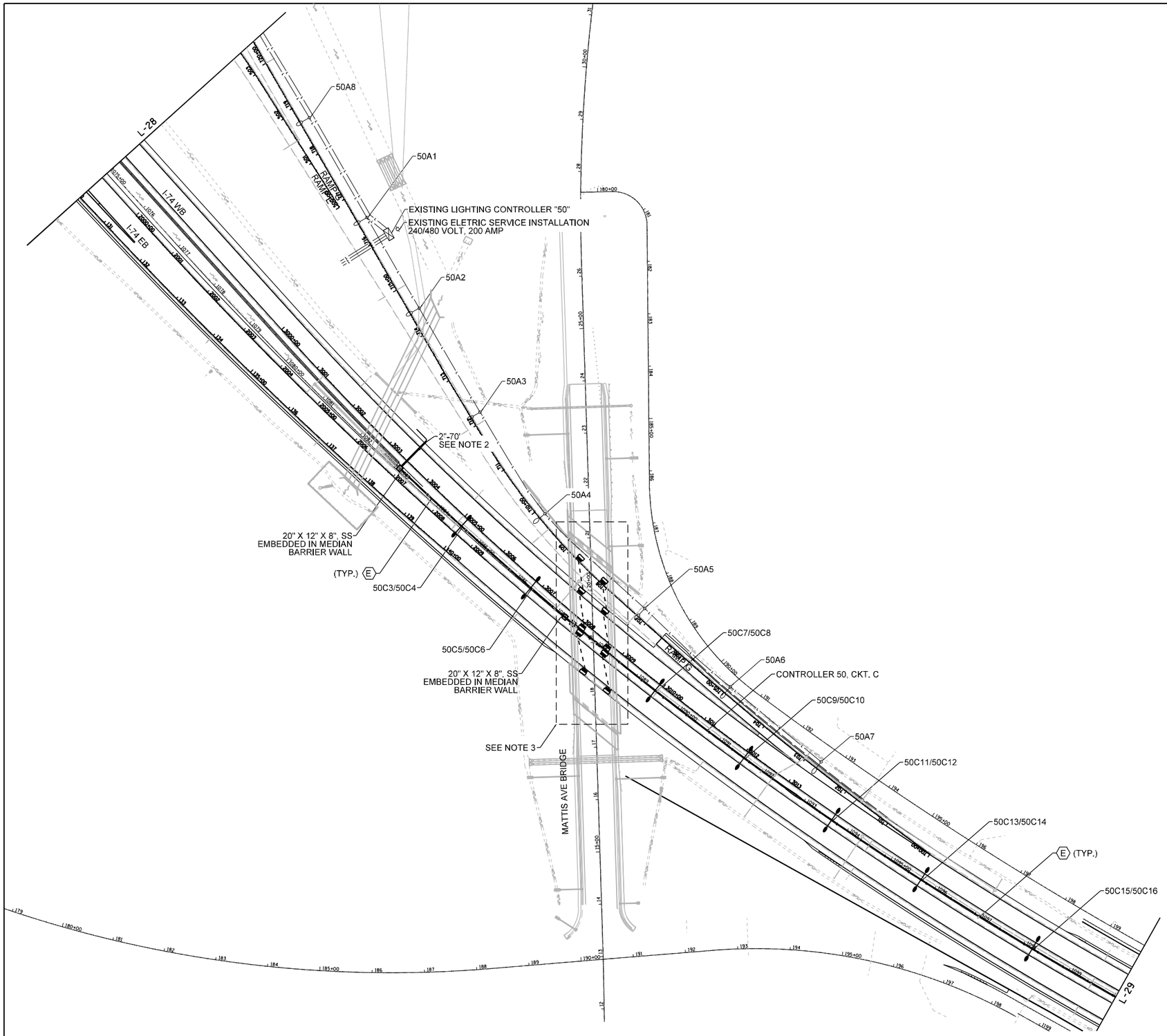

L-28

FILE NAME = D570C01-lightStage1-4.dgn	USER NAME = bbarr	DESIGNED -	REVISED -	STATE OF ILLINOIS DEPARTMENT OF TRANSPORTATION	PROPOSED LIGHTING PLAN I-74 STAGE 1	F.A.I. RTE.	SECTION	COUNTY	TOTAL SHEETS	SHEET NO.
		DRAWN -	REVISED -			57	10-(33,34,5,14)R & (10-34)B	CHAMPAIGN	1182	852
	PLOT SCALE = 200.0000 ' / in.	CHECKED -	REVISED -					CONTRACT NO. 70C01		
	PLOT DATE = 2/27/2022	DATE -	REVISED -		SCALE: 1"=100' SHEET 28 OF 58 SHEETS STA. TO STA.		ILLINOIS FED. AID PROJECT			

NOTES:

1. SEE SHEET L-1 FOR GENERAL NOTES. SEE SHEET L-2 FOR LIGHTING STAGING NOTES.

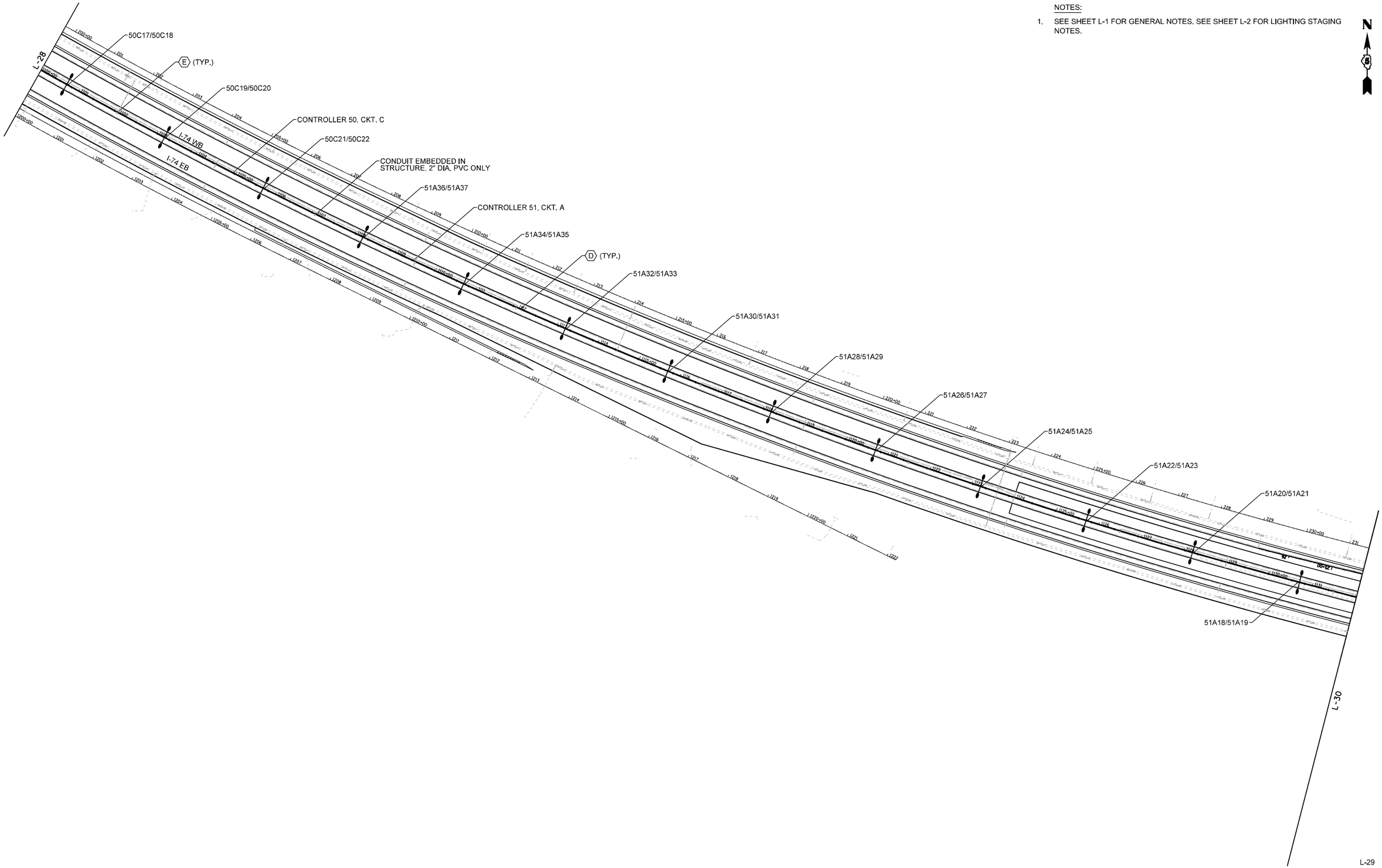

FILE NAME = D570C01-lightStage1-5.dgn	USER NAME = bbarr	DESIGNED -	REVISED -	STATE OF ILLINOIS DEPARTMENT OF TRANSPORTATION	PROPOSED LIGHTING PLAN I-74 STAGE 1	F.A.I. RTE.	SECTION	COUNTY	TOTAL SHEETS	SHEET NO.
		DRAWN -	REVISED -			57	10-(33,34,5,14)R & (10-34)B	CHAMPAIGN	1182	853
	PLOT SCALE = 200.0000 ' / in.	CHECKED -	REVISED -					CONTRACT NO. 70C01		
	PLOT DATE = 2/27/2022	DATE -	REVISED -		SCALE: 1"=100' SHEET 29 OF 58 SHEETS STA. TO STA.		ILLINOIS FED. AID PROJECT			

NOTES:

1. SEE SHEET L-1 FOR GENERAL NOTES. SEE SHEET L-2 FOR LIGHTING STAGING NOTES.
2. THE CONTRACTOR SHALL STAGE INSTALLATION OF CONDUIT AND PROVIDE STUB-UP, AS NECESSARY, NO UNDERGROUND SPLICING OF CABLING WILL BE PERMITTED.
3. NEW LIGHT POLE SHALL BE INSTALLED ONTO EXISTING FOUNDATION.
4. NEW CABLE SHALL BE INSTALLED IN EXISTING CONDUIT TO REMAIN IN PLACE.

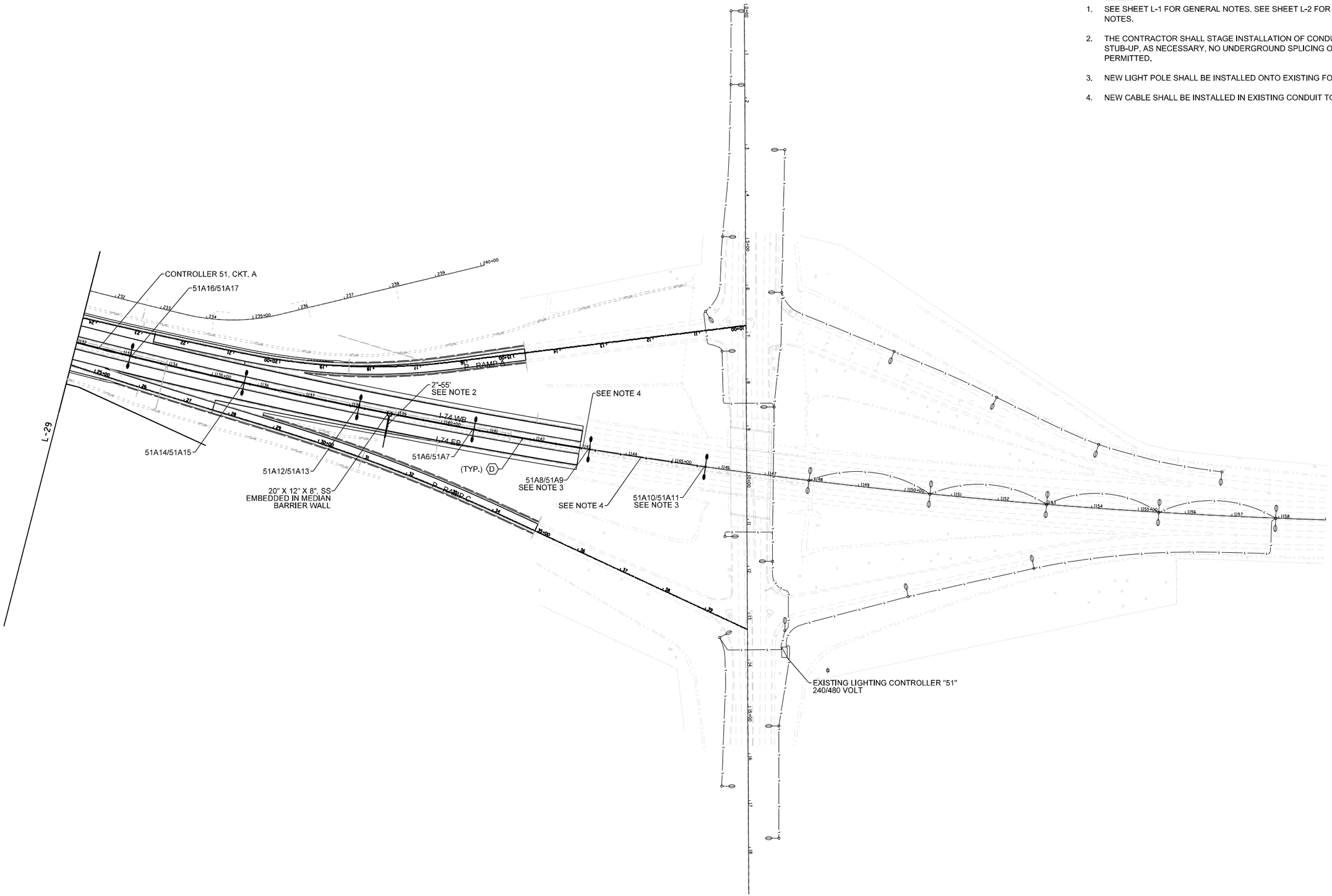

L-30

FILE NAME = D570C01-lightStage1-6.dgn	USER NAME = bbarr	DESIGNED -	REVISED -	STATE OF ILLINOIS DEPARTMENT OF TRANSPORTATION	PROPOSED LIGHTING PLAN I-74 STAGE 1	F.A.I. RTE.	SECTION	COUNTY	TOTAL SHEETS	SHEET NO.
		DRAWN -	REVISED -			57	10-(33,34,5,14)R & (10-34)B	CHAMPAIGN	1182	854
	PLOT SCALE = 200.0000 ' / in.	CHECKED -	REVISED -					CONTRACT NO. 70C01		
	PLOT DATE = 2/27/2022	DATE -	REVISED -		SCALE: 1"=100' SHEET 30 OF 58 SHEETS STA. TO STA.		ILLINOIS	FED. AID PROJECT		

NOTES:

1. SEE SHEET L-1 FOR GENERAL NOTES. SEE SHEET L-2 FOR LIGHTING STAGING NOTES.

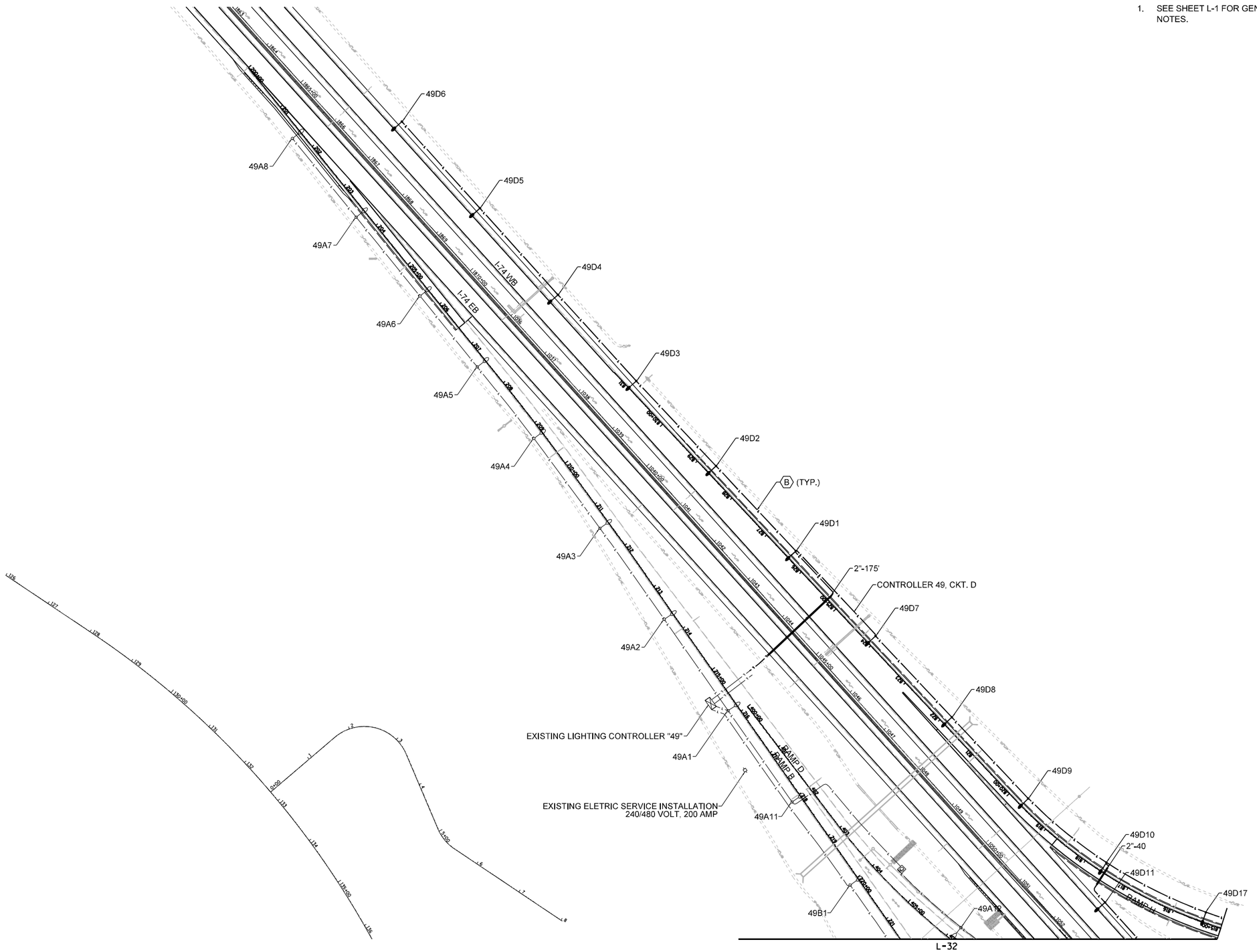

L-31

FILE NAME = D570C01-lightStage2-1.dgn	USER NAME = bbarr	DESIGNED -	REVISED -	STATE OF ILLINOIS DEPARTMENT OF TRANSPORTATION	PROPOSED LIGHTING PLAN I-74 STAGE 2	F.A.I. RTE.	SECTION	COUNTY	TOTAL SHEETS	SHEET NO.
		DRAWN -	REVISED -			57	10-(33,34,5,14)R & (10-34)B	CHAMPAIGN	1182	855
	PLOT SCALE = 200.0000 ' / in.	CHECKED -	REVISED -					CONTRACT NO. 70C01		
	PLOT DATE = 2/27/2022	DATE -	REVISED -		SCALE: 1"=100' SHEET 31 OF 58 SHEETS STA. TO STA.		ILLINOIS FED. AID PROJECT			

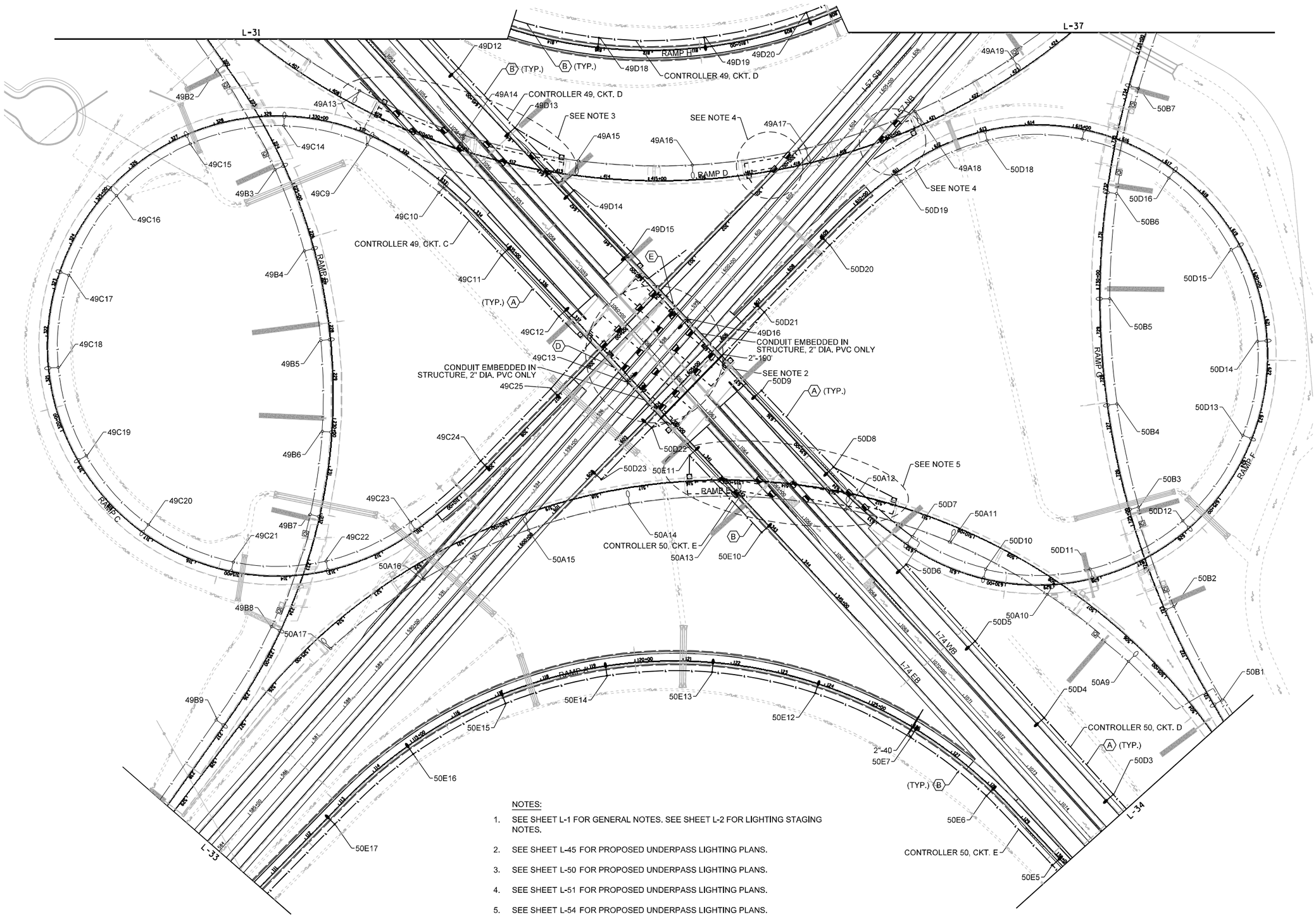

NOTES:

1. SEE SHEET L-1 FOR GENERAL NOTES. SEE SHEET L-2 FOR LIGHTING STAGING NOTES.
2. SEE SHEET L-45 FOR PROPOSED UNDERPASS LIGHTING PLANS.
3. SEE SHEET L-50 FOR PROPOSED UNDERPASS LIGHTING PLANS.
4. SEE SHEET L-51 FOR PROPOSED UNDERPASS LIGHTING PLANS.
5. SEE SHEET L-54 FOR PROPOSED UNDERPASS LIGHTING PLANS.

L-32

FILE NAME = D570C01-lightStage2-2.dgn	USER NAME = bbarr	DESIGNED -	REVISED -	STATE OF ILLINOIS DEPARTMENT OF TRANSPORTATION	PROPOSED LIGHTING PLAN I-74 STAGE 2 AND I-57 STAGE 6	F.A.I. RTE.	SECTION	COUNTY	TOTAL SHEETS	SHEET NO.
		DRAWN -	REVISED -			57	10-(33,34,5,14)R & (10-34)B	CHAMPAIGN	1182	856
	PLOT SCALE = 200.0000 ' / in.	CHECKED -	REVISED -					CONTRACT NO. 70C01		
	PLOT DATE = 2/27/2022	DATE -	REVISED -		SCALE: 1"=100' SHEET 32 OF 58 SHEETS STA. TO STA.		ILLINOIS FED. AID PROJECT			

NOTES:

1. SEE SHEET L-1 FOR GENERAL NOTES. SEE SHEET L-2 FOR LIGHTING STAGING NOTES.

2. SEE SHEET L-47 FOR PROPOSED UNDERPASS LIGHTING PLANS.

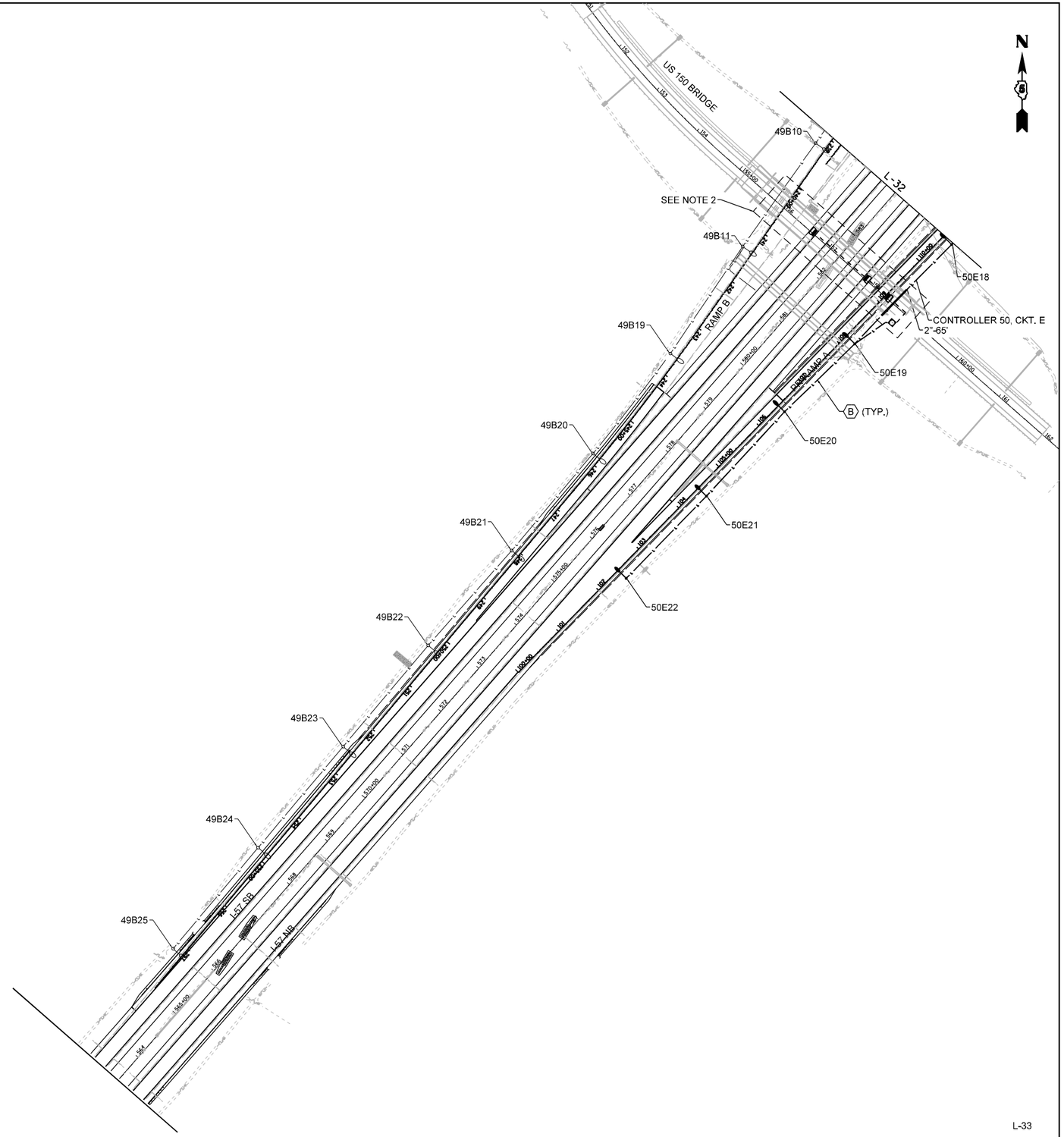

L-33

FILE NAME = D570C01-lightStage2-3.dgn	USER NAME = bbarr	DESIGNED -	REVISED -
		DRAWN -	REVISED -
	PLOT SCALE = 200.0000 ' / in.	CHECKED -	REVISED -
	PLOT DATE = 2/27/2022	DATE -	REVISED -

STATE OF ILLINOIS
DEPARTMENT OF TRANSPORTATION

PROPOSED LIGHTING PLAN
I-57 STAGE 6

SCALE: 1"=100' | SHEET 33 OF 58 SHEETS | STA. TO STA.

F.A.I. RTE.	SECTION	COUNTY	TOTAL SHEETS	SHEET NO.
57	10-(33,34,5,14)R & (10-34)B	CHAMPAIGN	1182	857
		CONTRACT NO. 70C01		
		ILLINOIS FED. AID PROJECT		

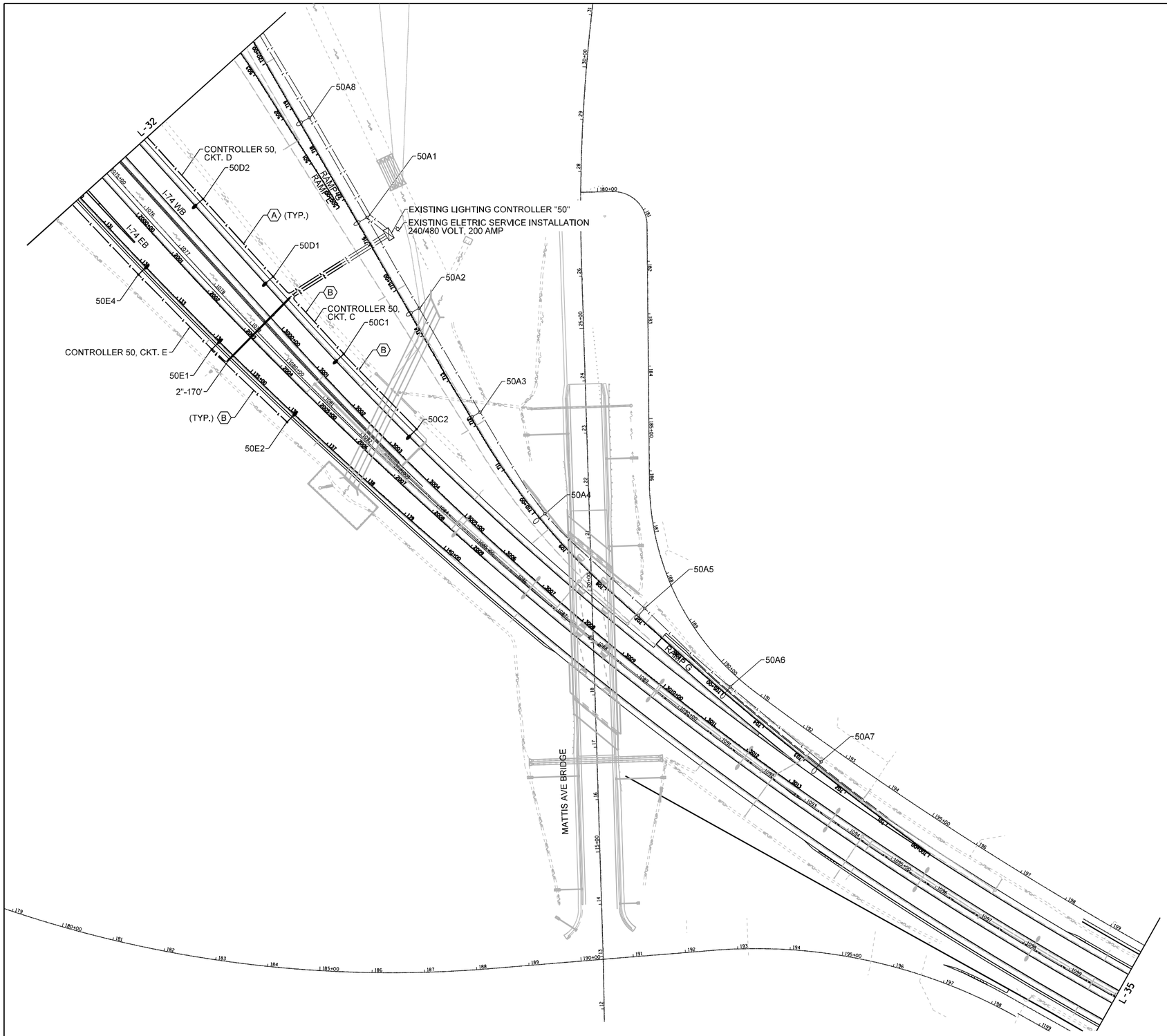

NOTES:

1. SEE SHEET L-1 FOR GENERAL NOTES. SEE SHEET L-2 FOR LIGHTING STAGING NOTES.

2. UPON REMOVAL OF EXISTING CABLE FEED TO TEMPORARY LIGHT POLE OR EXISTING LIGHT POLE TO BE REMOVED AT A LATER STAGE, THE CONTRACTOR SHALL ENSURE CONTINUITY OF THE CIRCUITS VIA TEMPORARY UNDERGROUND CABLE INSTALLATION TO ADJACENT PROPOSED LIGHT POLE. THIS WORK SHALL BE PAID FOR AS "MAINTAIN EXISTING LIGHTING SYSTEM".

N

FILE NAME = D570C01-lightStage2-4.dgn	USER NAME = bbarr	DESIGNED -	REVISED -
		DRAWN -	REVISED -
	PLOT SCALE = 200.0000 ' / in.	CHECKED -	REVISED -
	PLOT DATE = 2/27/2022	DATE -	REVISED -

STATE OF ILLINOIS
DEPARTMENT OF TRANSPORTATION

PROPOSED LIGHTING PLAN
I-74 STAGE 2

SCALE: 1"=100' | SHEET 34 OF 58 SHEETS | STA. TO STA.

F.A.I. RTE.	SECTION	COUNTY	TOTAL SHEETS	SHEET NO.
57	10-(33,34,5,14)R & (10-34)B	CHAMPAIGN	1182	858
		CONTRACT NO. 70C01		
	ILLINOIS FED. AID PROJECT			

NOTES:

1. SEE SHEET L-1 FOR GENERAL NOTES. SEE SHEET L-2 FOR LIGHTING STAGING NOTES.

NO LIGHTING WORK ON THIS SHEET DURING THIS STAGE

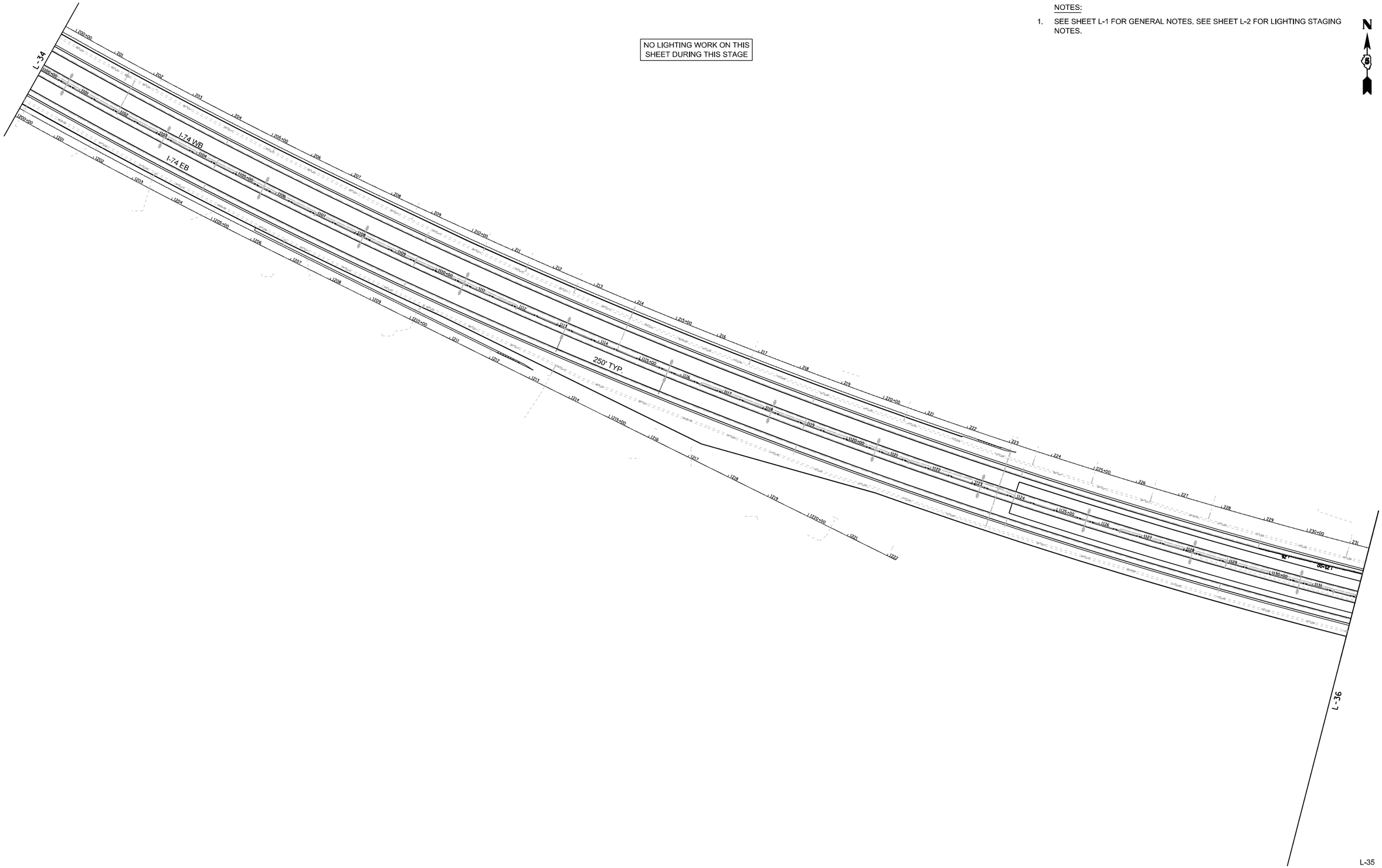

FILE NAME = D570C01-lightStage2-5.dgn	USER NAME = bbarr	DESIGNED -	REVISED -	STATE OF ILLINOIS DEPARTMENT OF TRANSPORTATION	PROPOSED LIGHTING PLAN I-74 STAGE 2	F.A.I. RTE.	SECTION	COUNTY	TOTAL SHEETS	SHEET NO.
		DRAWN -	REVISED -			57	10-(33,34,5,14)R & (10-34)B	CHAMPAIGN	1182	859
	PLOT SCALE = 200.0000 ' / in.	CHECKED -	REVISED -			CONTRACT NO. 70C01				
	PLOT DATE = 2/27/2022	DATE -	REVISED -		SCALE: 1"=100' SHEET 35 OF 58 SHEETS STA. TO STA.	ILLINOIS FED. AID PROJECT				

NOTES:

1. SEE SHEET L-1 FOR GENERAL NOTES. SEE SHEET L-2 FOR LIGHTING STAGING NOTES.
2. EXISTING CABLE ROUTE TO BE FIELD VERIFIED.

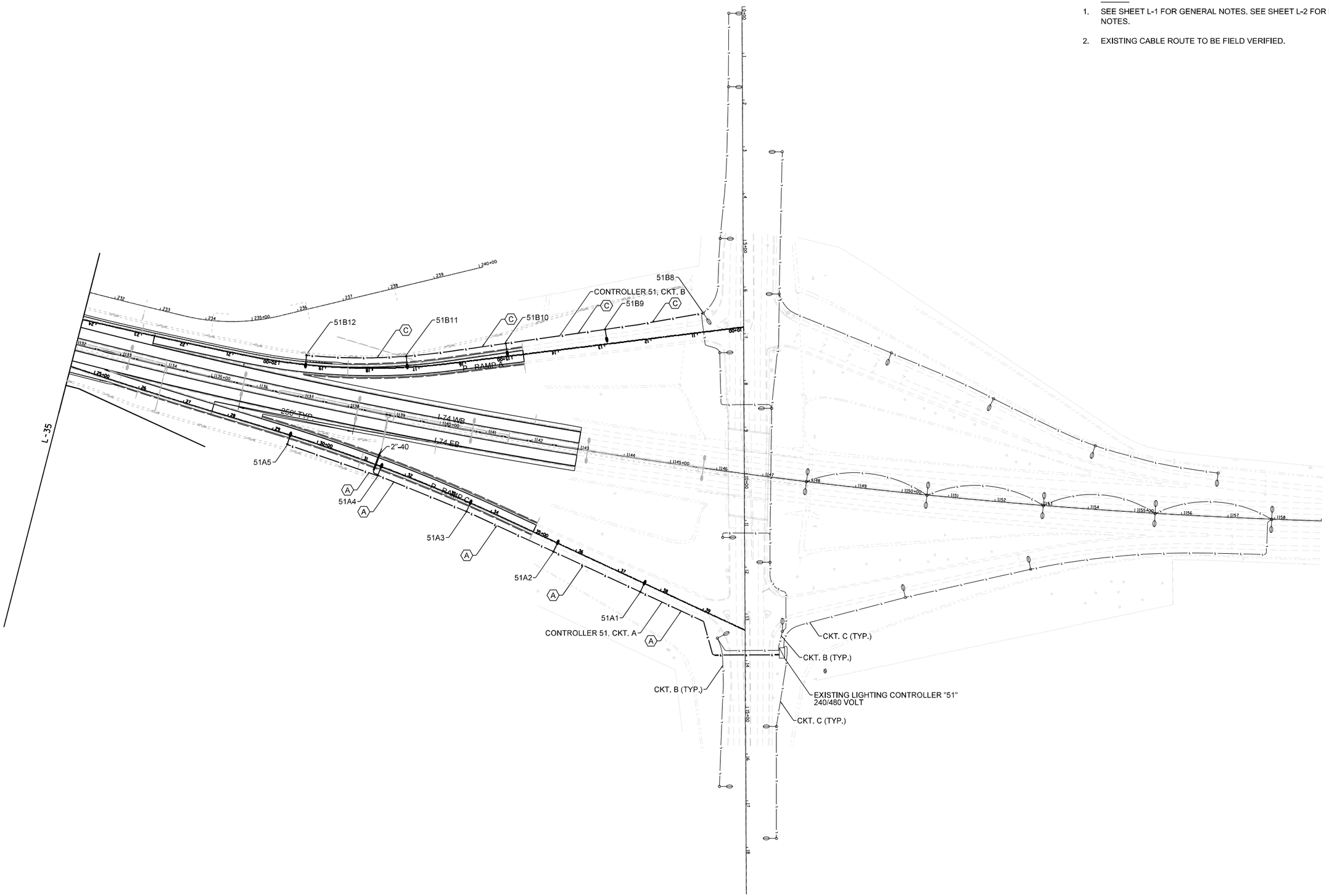

L-36

FILE NAME = D570C01-lightStage2-6.dgn	USER NAME = bbarr	DESIGNED -	REVISED -	STATE OF ILLINOIS DEPARTMENT OF TRANSPORTATION	PROPOSED LIGHTING PLAN I-74 STAGE 2	F.A.I. RTE.	SECTION	COUNTY	TOTAL SHEETS / SHEET NO.
		DRAWN -	REVISED -			57	10-(33,34,5,14)R & (10-34)B	CHAMPAIGN	1182 / 860
	PLOT SCALE = 200.0000 ' / in.	CHECKED -	REVISED -					CONTRACT NO. 70C01	
	PLOT DATE = 2/27/2022	DATE -	REVISED -		SCALE: 1"=100' / SHEET 36 OF 58 SHEETS / STA. TO STA.		ILLINOIS FED. AID PROJECT		

NOTES:

1. SEE SHEET L-1 FOR GENERAL NOTES. SEE SHEET L-2 FOR LIGHTING STAGING NOTES.
2. SEE SHEET L-46 FOR PROPOSED UNDERPASS LIGHTING PLANS.

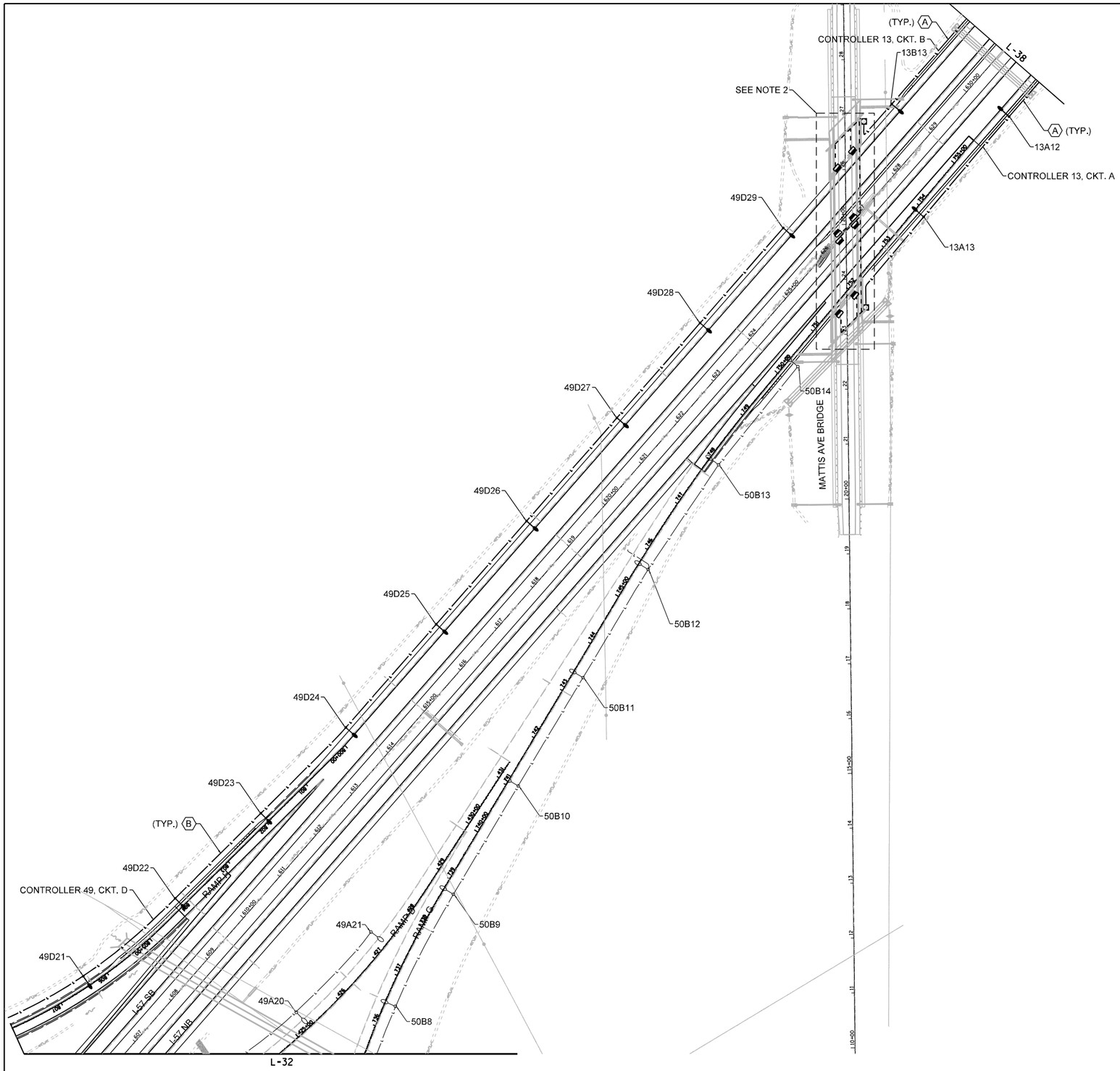

L-37

FILE NAME = D570C01-lightStage2-7.dgn	USER NAME = bbarr	DESIGNED -	REVISED -
		DRAWN -	REVISED -
	PLOT SCALE = 200.0000 ' / in.	CHECKED -	REVISED -
	PLOT DATE = 2/27/2022	DATE -	REVISED -

STATE OF ILLINOIS
DEPARTMENT OF TRANSPORTATION

PROPOSED LIGHTING PLAN
I-57 STAGE 6

SCALE: 1"=100' | SHEET 37 OF 58 SHEETS | STA. TO STA.

F.A.I. RTE.	SECTION	COUNTY	TOTAL SHEETS	SHEET NO.
57	10-(33,34,5,14)R & (10-34)B	CHAMPAIGN	1182	861
		CONTRACT NO. 70C01		
		ILLINOIS FED. AID PROJECT		

NOTES:

1. SEE SHEET L-1 FOR GENERAL NOTES. SEE SHEET L-2 FOR LIGHTING STAGING NOTES.
2. EXISTING CABLE ROUTE TO BE FIELD VERIFIED.
3. NEW LIGHTING CONTROLLER TO BE INSTALLED WITHIN 5'-0" OF EXISTING LIGHTING CONTROLLER, 18'-0" FROM EDGE OF PAVEMENT. INTERCEPT EXISTING BRANCH CIRCUIT CONDUIT(S) WITH NEW 1" DIA. CNC AND ROUTE CONDUIT TO NEW LIGHTING CONTROLLER. INSTALL NEW CABLE BACK TO EXISTING LIGHTING UNIT(S) TO REMAIN.

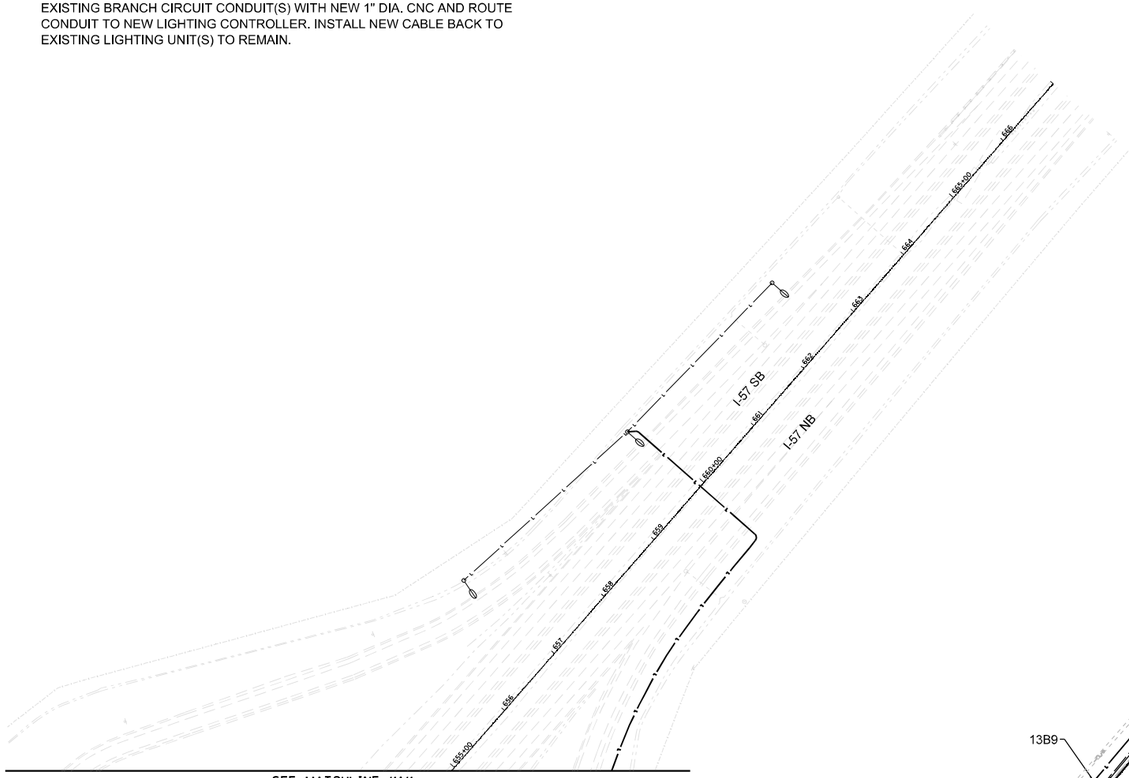

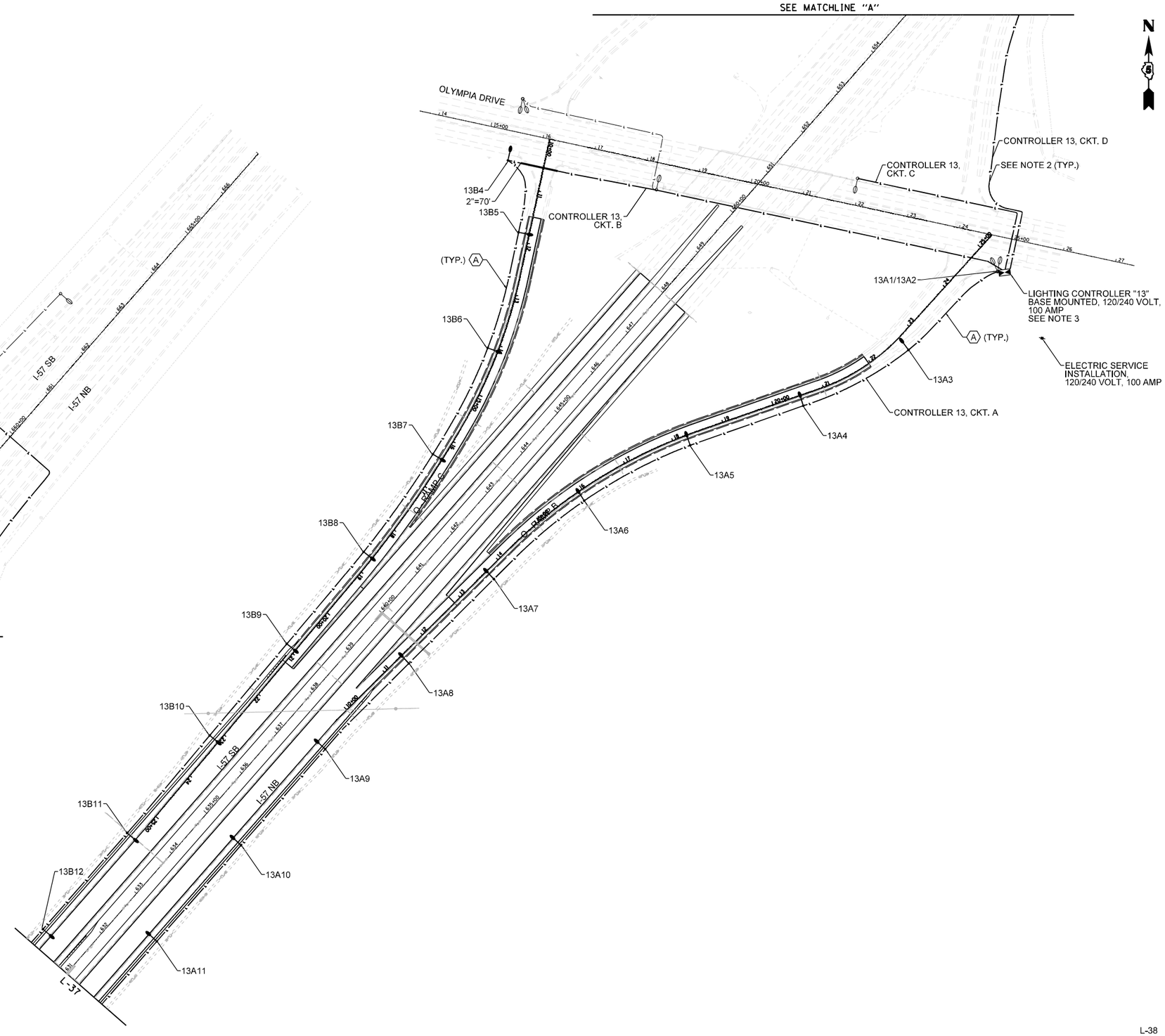

FILE NAME = D570C01-lightStage2-8.dgn	USER NAME = bbarr	DESIGNED -	REVISED -	STATE OF ILLINOIS DEPARTMENT OF TRANSPORTATION	PROPOSED LIGHTING PLAN I-57 STAGE 6			F.A.I. RTE.	SECTION	COUNTY	TOTAL SHEETS / SHEET NO.
		DRAWN -	REVISED -					57	10-(33,34,5,14)R & (10-34)B	CHAMPAIGN	1182 / 862
	PLOT SCALE = 200.0000 ' / in.	CHECKED -	REVISED -							CONTRACT NO. 70C01	
	PLOT DATE = 2/27/2022	DATE -	REVISED -		SCALE: 1"=100'	SHEET 38 OF 58 SHEETS	STA. TO STA.		ILLINOIS FED. AID PROJECT		

NOTES:

1. SEE SHEET L-1 FOR GENERAL NOTES. SEE SHEET L-2 FOR LIGHTING STAGING NOTES.

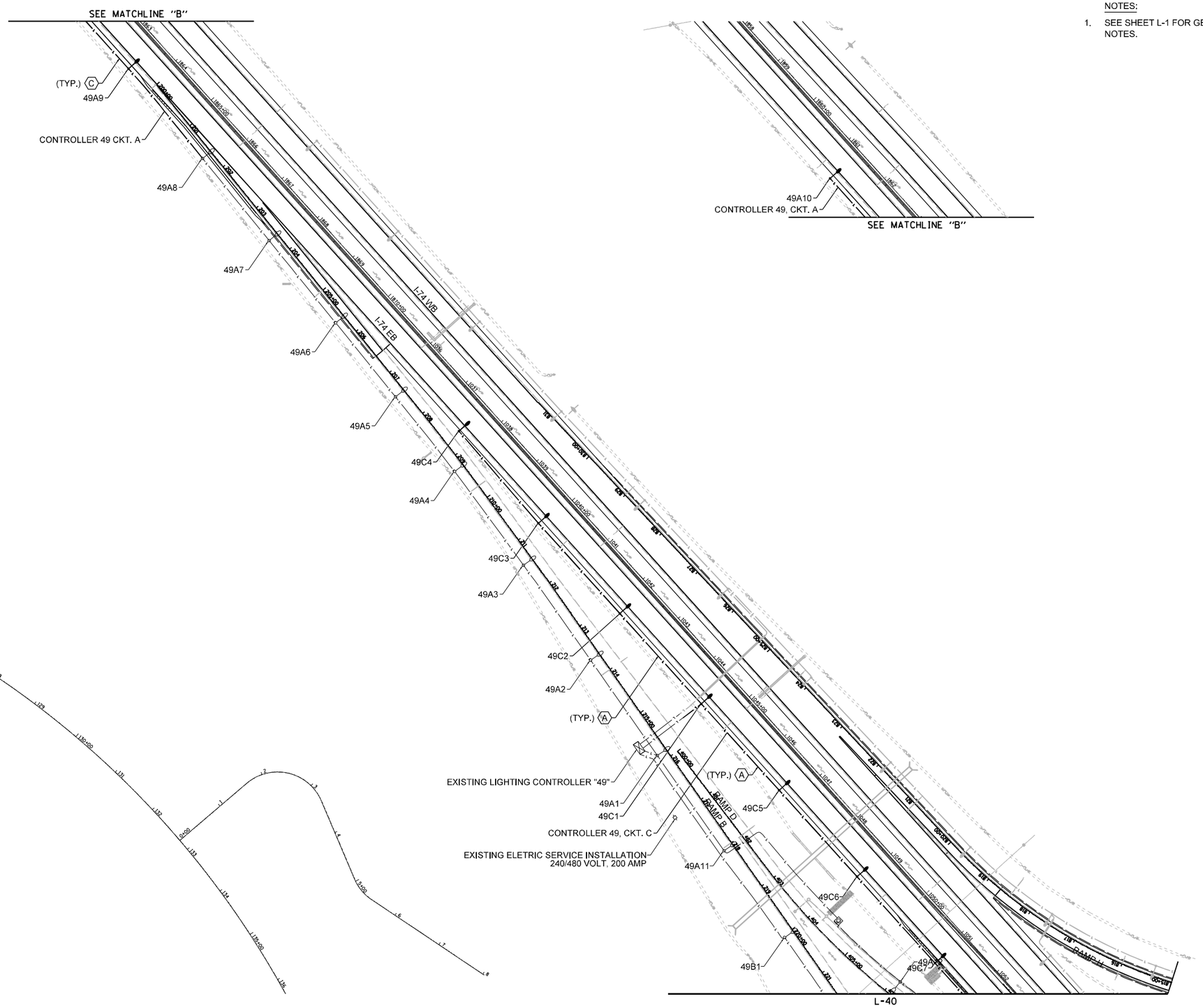

L-39

FILE NAME = D570C01-lightStage4-1.dgn	USER NAME = bbarr	DESIGNED -	REVISED -	STATE OF ILLINOIS DEPARTMENT OF TRANSPORTATION	PROPOSED LIGHTING PLAN I-74 STAGE 4	F.A.I. RTE.	SECTION	COUNTY	TOTAL SHEETS / SHEET NO.
		DRAWN -	REVISED -			57	10-(33,34,5,14)R & (10-34)B	CHAMPAIGN	1182 / 863
	PLOT SCALE = 200.0000 ' / in.	CHECKED -	REVISED -					CONTRACT NO. 70C01	
	PLOT DATE = 2/27/2022	DATE -	REVISED -		SCALE: 1"=100' SHEET 39 OF 58 SHEETS STA. TO STA.		ILLINOIS FED. AID PROJECT		

NOTES:

1. SEE SHEET L-1 FOR GENERAL NOTES. SEE SHEET L-2 FOR LIGHTING STAGING NOTES.

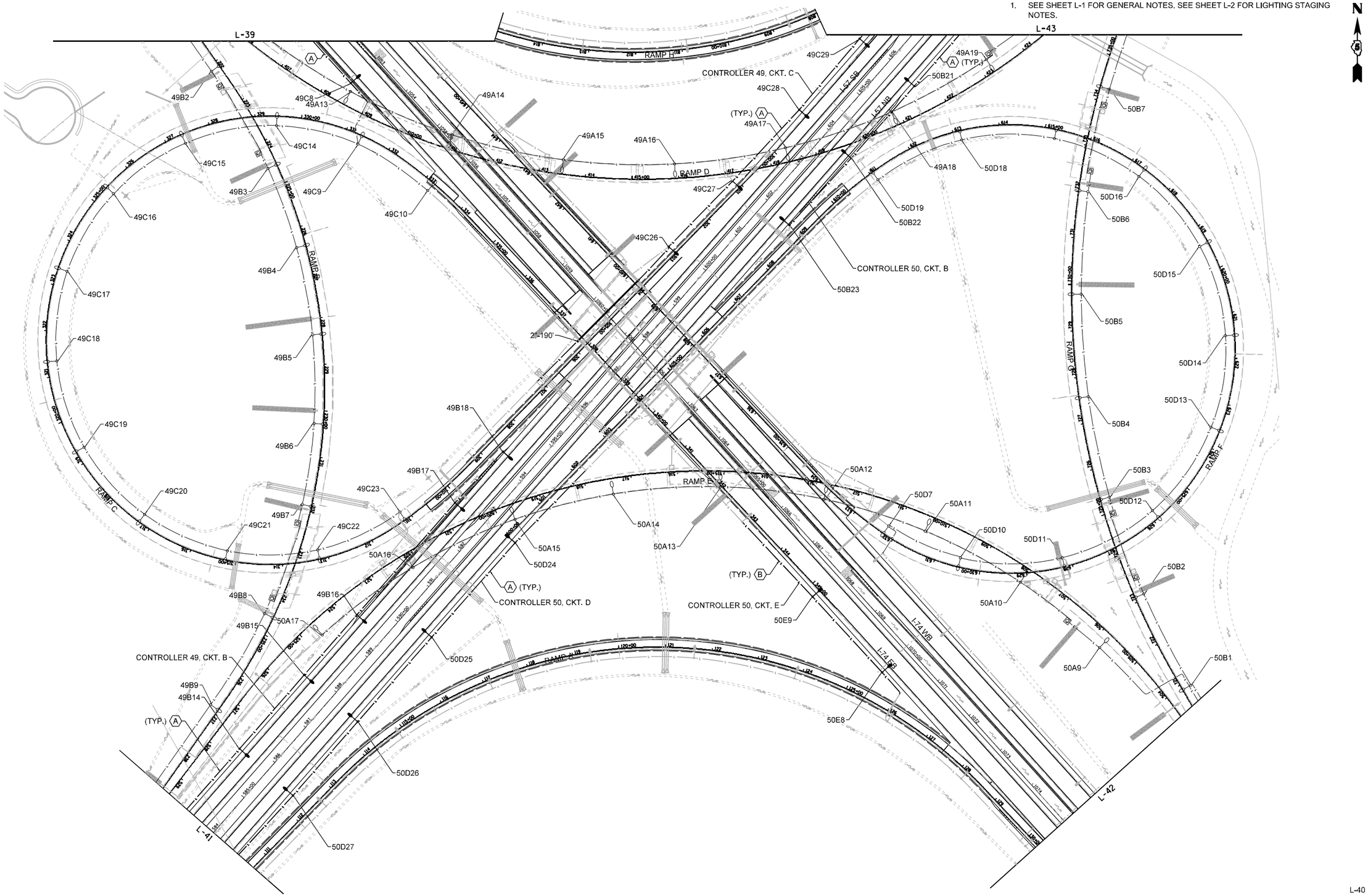

L-40

FILE NAME = D570C01-lightStage4-2.dgn	USER NAME = bbarr	DESIGNED -	REVISED -	STATE OF ILLINOIS DEPARTMENT OF TRANSPORTATION	PROPOSED LIGHTING PLAN I-74 STAGE 4 AND I-57 STAGE 8	F.A.I. RTE.	SECTION	COUNTY	TOTAL SHEETS	SHEET NO.
		DRAWN -	REVISED -			57	10-(33,34,5,14)R & (10-34)B	CHAMPAIGN	1182	864
	PLOT SCALE = 200.0000 ' / in.	CHECKED -	REVISED -					CONTRACT NO. 70C01		
	PLOT DATE = 2/27/2022	DATE -	REVISED -		SCALE: 1"=100' SHEET 40 OF 58 SHEETS STA. TO STA.		ILLINOIS FED. AID PROJECT			

NOTES:

1. SEE SHEET L-1 FOR GENERAL NOTES. SEE SHEET L-2 FOR LIGHTING STAGING NOTES.

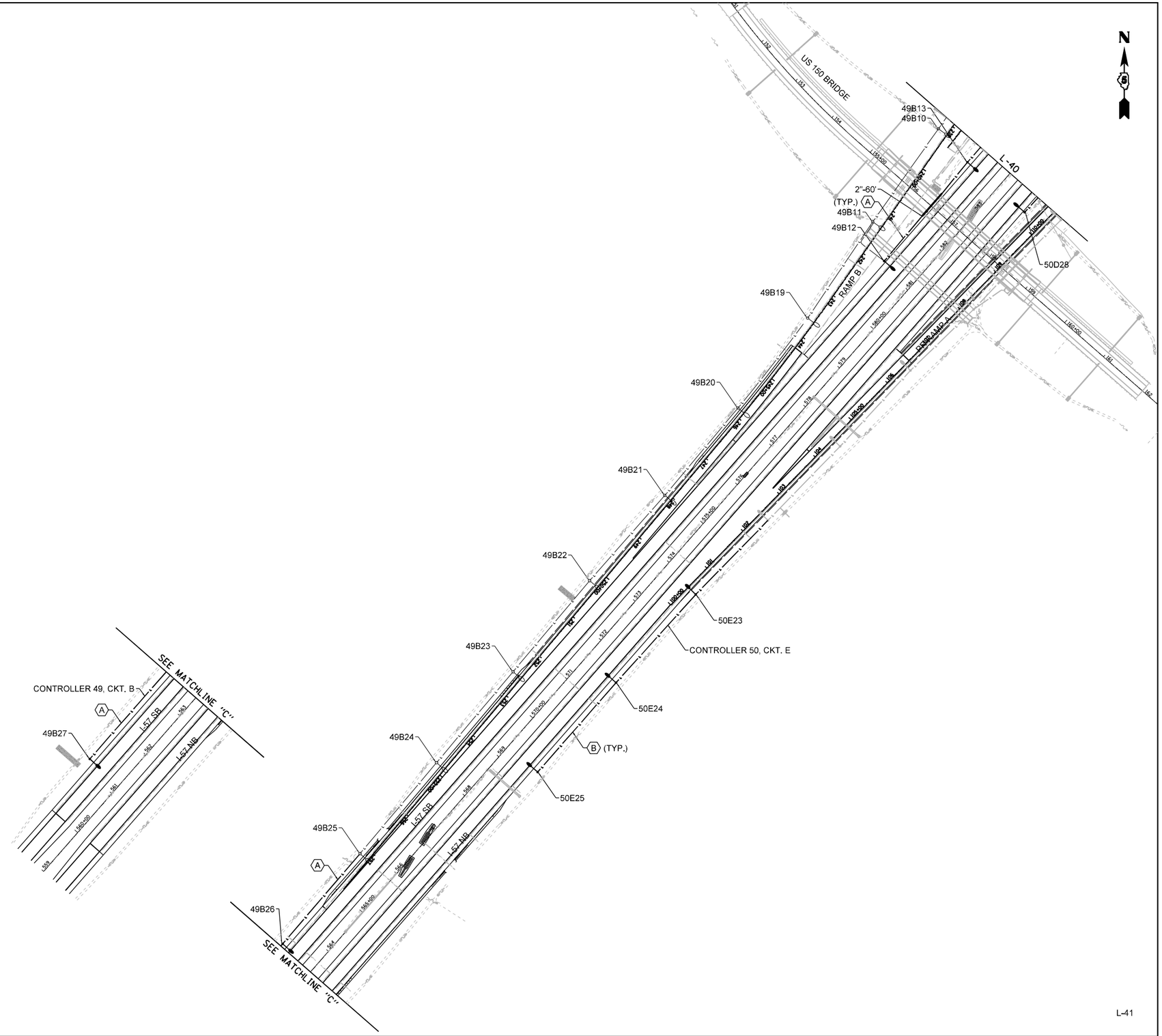

L-41

FILE NAME = D570C01-lightStage4-3.dgn	USER NAME = bbarr	DESIGNED -	REVISED -	STATE OF ILLINOIS DEPARTMENT OF TRANSPORTATION	PROPOSED LIGHTING PLAN I-57 STAGE 8	F.A.I. RTE.	SECTION	COUNTY	TOTAL SHEETS	SHEET NO.
		DRAWN -	REVISED -			57	10-(33,34,5,14)R & (10-34)B	CHAMPAIGN	1182	865
	PLOT SCALE = 200.0000 ' / in.	CHECKED -	REVISED -					CONTRACT NO. 70C01		
	PLOT DATE = 2/27/2022	DATE -	REVISED -		SCALE: 1"=100' SHEET 41 OF 58 SHEETS STA. TO STA.		ILLINOIS FED. AID PROJECT			

NOTES:

1. SEE SHEET L-1 FOR GENERAL NOTES. SEE SHEET L-2 FOR LIGHTING STAGING NOTES.

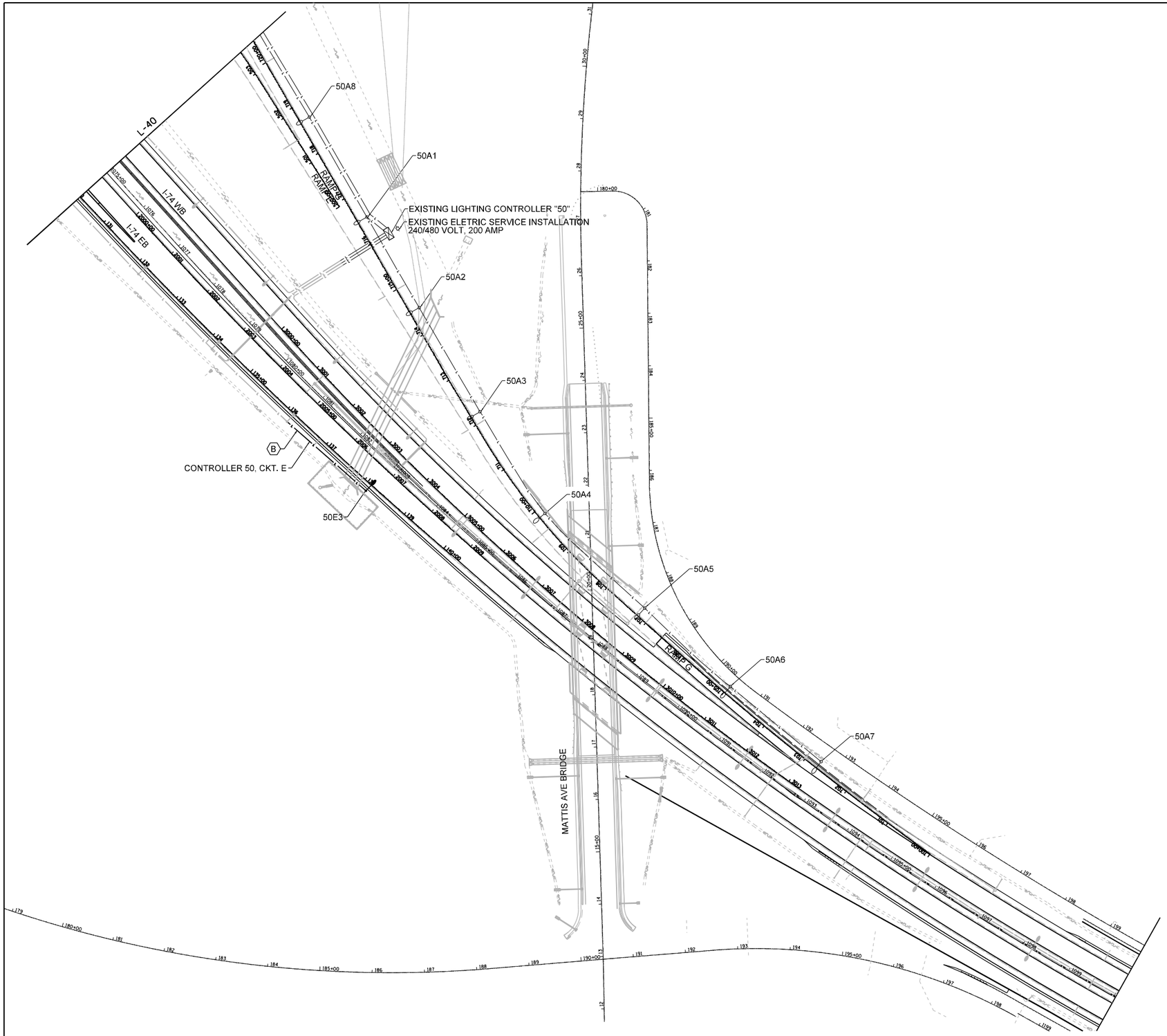

L-42

FILE NAME = D570C01-lightStage4-4.dgn	USER NAME = bbarr	DESIGNED -	REVISED -	STATE OF ILLINOIS DEPARTMENT OF TRANSPORTATION	PROPOSED LIGHTING PLAN I-74 STAGE 4	F.A.I. RTE.	SECTION	COUNTY	TOTAL SHEETS / SHEET NO.
		DRAWN -	REVISED -			57	10-(33,34,5,14)R & (10-34)B	CHAMPAIGN	1182 / 866
	PLOT SCALE = 200.0000 ' / in.	CHECKED -	REVISED -			CONTRACT NO. 70C01			
	PLOT DATE = 2/27/2022	DATE -	REVISED -		SCALE: 1"=100' SHEET 42 OF 58 SHEETS STA. TO STA.	ILLINOIS FED. AID PROJECT			

NOTES:

1. SEE SHEET L-1 FOR GENERAL NOTES. SEE SHEET L-2 FOR LIGHTING STAGING NOTES.

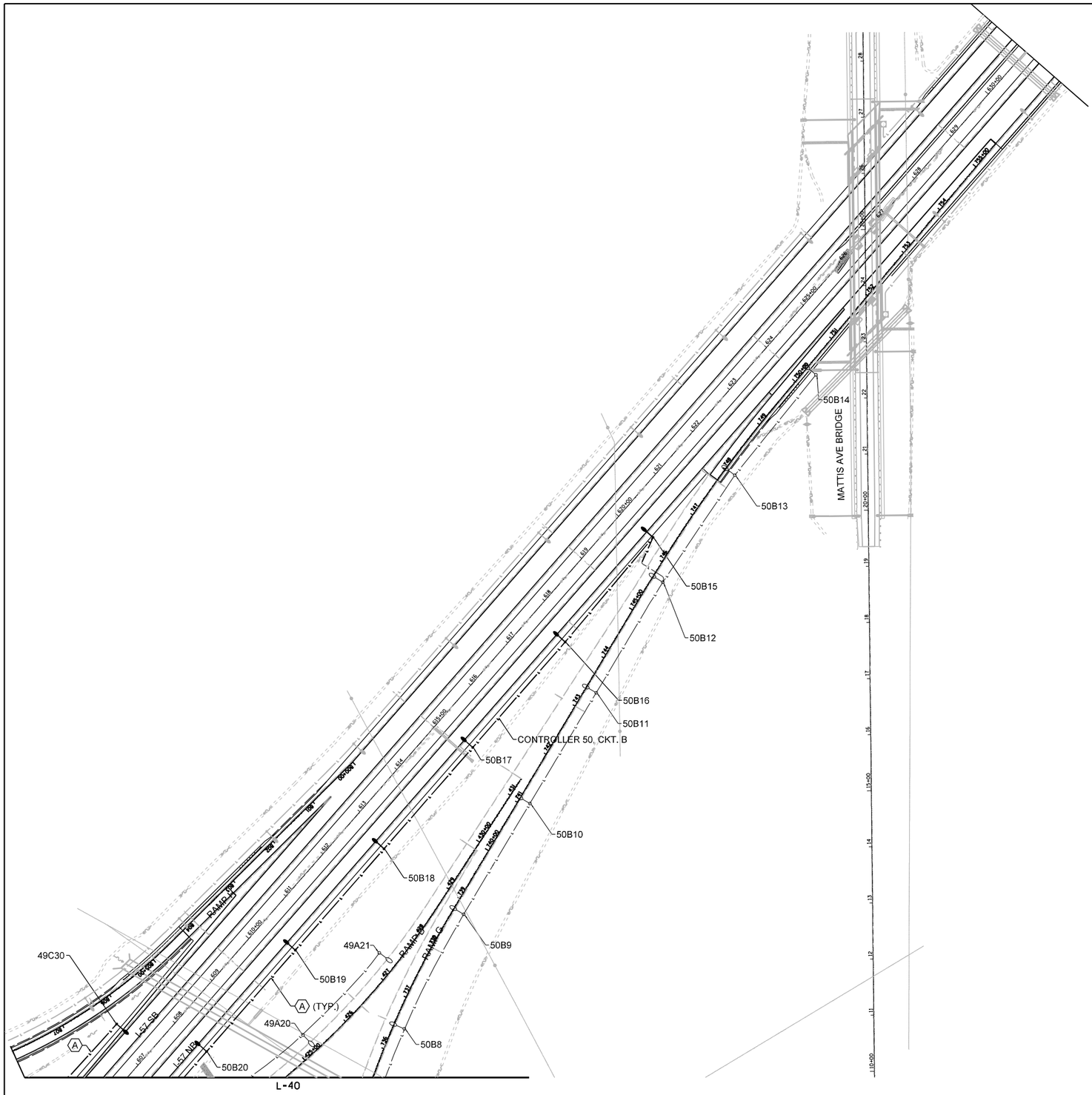

L-43

FILE NAME = D570C01-lightStage4-7.dgn	USER NAME = bbarr	DESIGNED -	REVISED -
		DRAWN -	REVISED -
	PLOT SCALE = 200.0000 ' / in.	CHECKED -	REVISED -
	PLOT DATE = 2/27/2022	DATE -	REVISED -

STATE OF ILLINOIS
DEPARTMENT OF TRANSPORTATION

PROPOSED LIGHTING PLAN
I-57 STAGE 8

SCALE: 1"=100' | SHEET 43 OF 58 SHEETS | STA. TO STA.

F.A.I. RTE.	SECTION	COUNTY	TOTAL SHEETS	SHEET NO.
57	10-(33,34,5,14)R & (10-34)B	CHAMPAIGN	1182	867
		CONTRACT NO. 70C01		
		ILLINOIS FED. AID PROJECT		

LIGHTING LEGEND

PROPOSED JUNCTION BOX, STAINLESS STEEL, ATTACHED TO STRUCTURE

JB1	18" X 18" X 8" (SEE NOTE 1)
JB2	12" X 10" X 6" (SEE NOTE 2)
JB3	6" X 6" X 4" (SEE NOTE 2)

CABLE TAGS

G — ELECTRIC CABLE IN CONDUIT, 600V (XLP-TYPE USE) 2-1C NO.10, 1/C NO.10 GROUND, IN CONDUIT ATTACHED TO STRUCTURE, 1" DIA., SS

H — ELECTRIC CABLE IN CONDUIT, 600V (XLP-TYPE USE) 2-1C NO.10, 1/C NO.10 GROUND, IN CONDUIT ATTACHED TO STRUCTURE, 2" DIA., SS

NOTES:

1. PROVIDE ONE (1) 2-POLE, 30A, 600V CIRCUIT BREAKER AND ONE (1) SURGE PROTECTION DEVICE (IN ACCORDANCE WITH ARTICLE 1065.02 OF THE STANDARD SPECIFICATIONS).
2. NOT SHOWN FOR CLARITY. REFER TO HIGHWAY STANDARD DRAWINGS 821001 AND 821006 FOR DETAILS. AT THE MATTIS AVENUE OVER I-74 UNDERPASS, A 12" X 10" X 6" JUNCTION BOX SHALL BE USED IN LIEU OF A 6" X 6" X 4" JUNCTION BOX AT THE CENTER PIER.
3. THE CONTRACTOR SHALL USE METALLIC TO NON-METALLIC TRANSITION COUPLING TO INTERCEPT NEW EMBEDDED 2" DIA. PVC CONDUIT WITH NEW 2" DIA. STAINLESS STEEL CONDUIT ATTACHED TO STRUCTURE. REFER TO HIGHWAY STANDARD DRAWINGS 821001 AND 821006 FOR DETAILS.
4. SEE SHEET L-28 FOR CABLE REQUIREMENTS.
5. REFER TO HIGHWAY STANDARD DRAWING 821001 FOR DETAILS. WALL MOUNTED LUMINAIRE MOUNTING HEIGHT OF 15'-0" MINIMUM TO GRADE.
6. REFER TO HIGHWAY STANDARD DRAWING 821006 FOR DETAILS. PROPOSED UNDERPASS LUMINAIRES SHALL BE SUSPENDED MOUNTED. LUMINAIRES SHALL BE OFFSET 6 FEET FROM EDGE OF PAVEMENT.

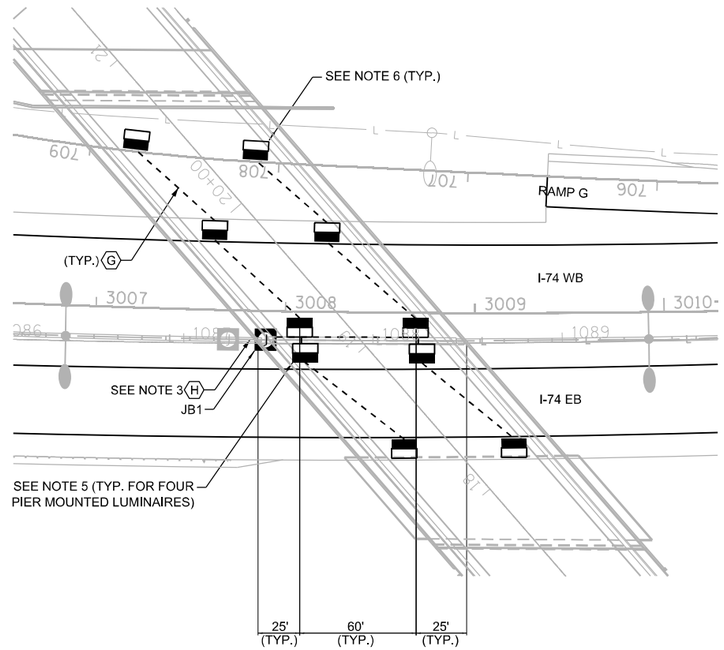

SCHEDULE OF QUANTITIES FOR UNDERPASS JUNCTION BOXES

PAY ITEM	DESCRIPTION	UNIT	QUANTITY
81300220	JUNCTION BOX, STAINLESS STEEL, ATTACHED TO STRUCTURE, 6" X 6" X 4"	EACH	6
81300530	JUNCTION BOX, STAINLESS STEEL, ATTACHED TO STRUCTURE, 12" X 10" X 6"	EACH	3
81300830	JUNCTION BOX, STAINLESS STEEL, ATTACHED TO STRUCTURE, 18" X 18" X 8"	EACH	1

LIGHTING LEGEND

PROPOSED JUNCTION BOX, STAINLESS STEEL, ATTACHED TO STRUCTURE

JB1 18" X 18" X 8" (SEE NOTE 1)
JB2 12" X 10" X 6" (SEE NOTE 2)
JB3 6" X 6" X 4" (SEE NOTE 2)

CABLE TAGS

(A) UNIT DUCT, 600V, 2-1C NO.6, 1/C NO.8 GROUND, (XLP-TYPE USE), 1" DIA. POLYETHYLENE

(G) ELECTRIC CABLE IN CONDUIT, 600V (XLP-TYPE USE) 2-1C NO.10, 1/C NO.10 GROUND, IN CONDUIT ATTACHED TO STRUCTURE, 1" DIA., SS

NOTES:

1. PROVIDE ONE (1) 2-POLE, 30A, 600V CIRCUIT BREAKER AND ONE (1) SURGE PROTECTION DEVICE (IN ACCORDANCE WITH ARTICLE 1065.02 OF THE STANDARD SPECIFICATIONS).
2. NOT SHOWN FOR CLARITY. REFER TO HIGHWAY STANDARD DRAWING 821006 FOR DETAILS.
3. THE CONTRACTOR SHALL INSTALL UNDERGROUND CNC THROUGH STAINLESS STEEL CONDUIT ATTACHED TO STRUCTURE, AS SHOWN ON HIGHWAY STANDARD DRAWINGS 821001 AND 821006.
4. SEE SHEET L-32 FOR CABLE REQUIREMENTS.
5. REFER TO HIGHWAY STANDARD DRAWING 821006 FOR DETAILS. PROPOSED UNDERPASS LUMINAIRES SHALL BE SUSPENDED MOUNTED. LUMINAIRES SHALL BE OFFSET SIX (6) FEET FROM EDGE OF PAVEMENT.
6. FINAL CABLE CONNECTION IS SHOWN. THE CONTRACTOR SHALL ENSURE CONTINUITY OF THE CIRCUITS VIA TEMPORARY CABLE FEED TO TEMPORARY LIGHT POLE UNTIL FINAL CONNECTION CAN BE MADE. THIS WORK SHALL BE PAID FOR AS "MAINTAIN EXISTING LIGHTING SYSTEM".

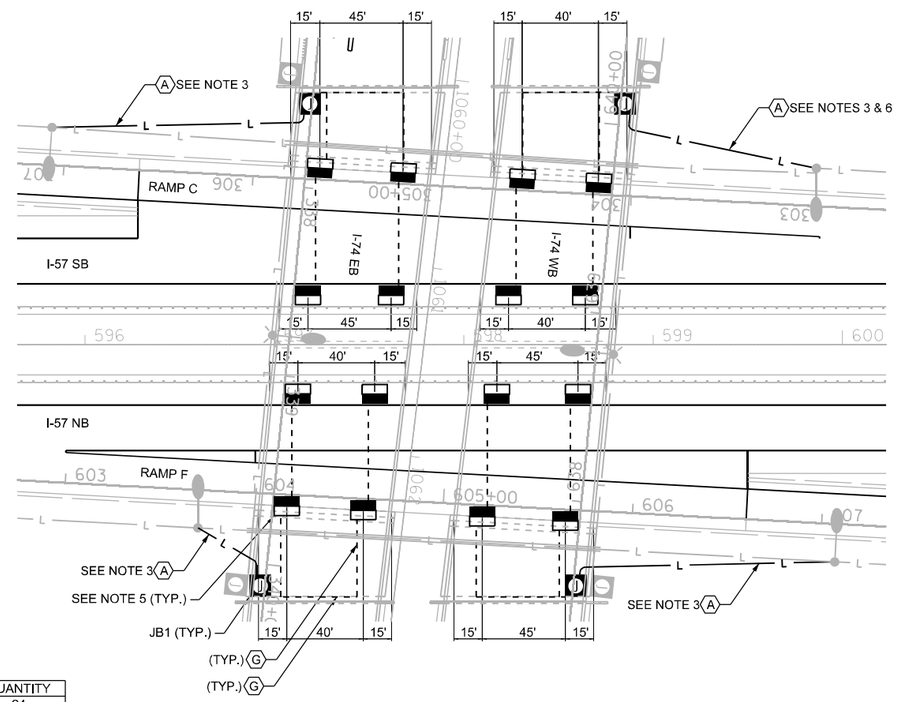

SCHEDULE OF QUANTITIES FOR UNDERPASS JUNCTION BOXES

PAY ITEM	DESCRIPTION	UNIT	QUANTITY
81300220	JUNCTION BOX, STAINLESS STEEL, ATTACHED TO STRUCTURE, 6" X 6" X 4"	EACH	24
81300530	JUNCTION BOX, STAINLESS STEEL, ATTACHED TO STRUCTURE, 12" X 10" X 6"	EACH	4
81300830	JUNCTION BOX, STAINLESS STEEL, ATTACHED TO STRUCTURE, 18" X 18" X 8"	EACH	4

FILE NAME = D570C01-lightup-2.dgn	USER NAME = bbarr	DESIGNED -	REVISED -
		DRAWN -	REVISED -
	PLOT SCALE = 80.0000 ' / in.	CHECKED -	REVISED -
	PLOT DATE = 2/27/2022	DATE -	REVISED -

STATE OF ILLINOIS
DEPARTMENT OF TRANSPORTATION

PROPOSED UNDERPASS LIGHTING PLAN
I-74 OVER I-57

SCALE: 1"=40' | SHEET 45 OF 58 SHEETS | STA. TO STA.

F.A.I. RTE.	SECTION	COUNTY	TOTAL SHEETS	SHEET NO.
57	10-(33,34,5,14)R & (10-34)B	CHAMPAIGN	1182	869

CONTRACT NO. 70C01

ILLINOIS FED. AID PROJECT

LIGHTING LEGEND

PROPOSED JUNCTION BOX, STAINLESS STEEL, ATTACHED TO STRUCTURE

JB1 18" X 18" X 8" (SEE NOTE 1)
JB2 12" X 10" X 6" (SEE NOTE 2)
JB3 6" X 6" X 4" (SEE NOTE 2)

CABLE TAGS

(A) UNIT DUCT, 600V, 2-1C NO.6, 1/C NO.8 GROUND, (XLP-TYPE USE), 1" DIA. POLYETHYLENE

(G) ELECTRIC CABLE IN CONDUIT, 600V (XLP-TYPE USE) 2-1C NO.10, 1/C NO.10 GROUND, IN CONDUIT ATTACHED TO STRUCTURE, 1" DIA., SS

NOTES:

1. PROVIDE ONE (1) 2-POLE, 30A, 600V CIRCUIT BREAKER AND ONE (1) SURGE PROTECTION DEVICE (IN ACCORDANCE WITH ARTICLE 1065.02 OF THE STANDARD SPECIFICATIONS).
2. NOT SHOWN FOR CLARITY. REFER TO HIGHWAY STANDARD DRAWINGS 821001 AND 821006 FOR DETAILS.
3. THE CONTRACTOR SHALL INSTALL UNDERGROUND CNC THROUGH STAINLESS STEEL CONDUIT ATTACHED TO STRUCTURE, AS SHOWN ON HIGHWAY STANDARD DRAWINGS 821001 AND 821006.
4. SEE SHEET L-37 FOR CABLE REQUIREMENTS.
5. REFER TO HIGHWAY STANDARD DRAWING 821001 FOR DETAILS. WALL MOUNTED LUMINAIRE MOUNTING HEIGHT OF 15'-0" MINIMUM TO GRADE.
6. REFER TO HIGHWAY STANDARD DRAWING 821006 FOR DETAILS. PROPOSED UNDERPASS LUMINAIRES SHALL BE SUSPENDED MOUNTED. LUMINAIRES SHALL BE OFFSET 6 FEET FROM EDGE OF PAVEMENT.

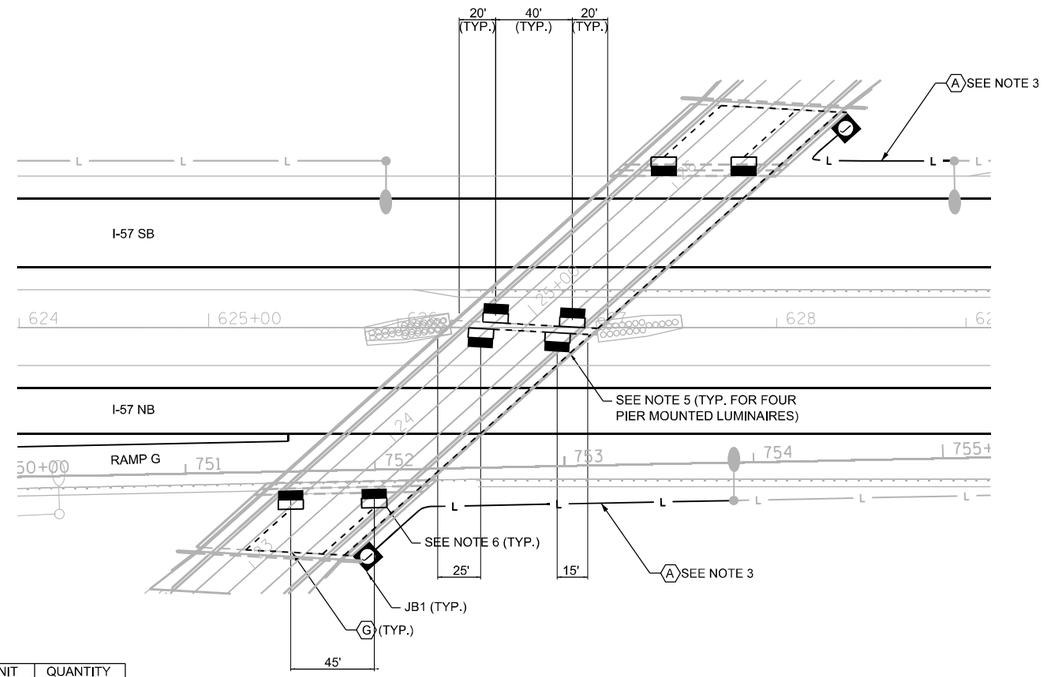

SCHEDULE OF QUANTITIES FOR UNDERPASS JUNCTION BOXES

PAY ITEM	DESCRIPTION	UNIT	QUANTITY
81300220	JUNCTION BOX, STAINLESS STEEL, ATTACHED TO STRUCTURE, 6" X 6" X 4"	EACH	12
81300530	JUNCTION BOX, STAINLESS STEEL, ATTACHED TO STRUCTURE, 12" X 10" X 6"	EACH	2
81300830	JUNCTION BOX, STAINLESS STEEL, ATTACHED TO STRUCTURE, 18" X 18" X 8"	EACH	2

FILE NAME = D570C01-lightup-3.dgn	USER NAME = bbarr	DESIGNED -	REVISED -	STATE OF ILLINOIS DEPARTMENT OF TRANSPORTATION	PROPOSED UNDERPASS LIGHTING PLAN MATTIS AVENUE OVER I-57	F.A.I. RTE. 57	SECTION 10-(33,34,5,14)R & (10-34)B	COUNTY CHAMPAIGN	TOTAL SHEETS 1182	SHEET NO. 870
		DRAWN -	REVISED -					CONTRACT NO. 70C01		
	PLOT SCALE = 80.0000 ' / in.	CHECKED -	REVISED -							
	PLOT DATE = 2/27/2022	DATE -	REVISED -		SCALE: 1"=40' SHEET 46 OF 58 SHEETS STA. TO STA.	ILLINOIS FED. AID PROJECT				

LIGHTING LEGEND

PROPOSED JUNCTION BOX, STAINLESS STEEL, ATTACHED TO STRUCTURE

JB1 18" X 18" X 8" (SEE NOTE 1)
JB2 12" X 10" X 6" (SEE NOTE 2)
JB3 6" X 6" X 4" (SEE NOTE 2)

CABLE TAGS

(A) UNIT DUCT, 600V, 2-1C NO.6, 1/C NO.8 GROUND, (XLP-TYPE USE), 1" DIA. POLYETHYLENE

(G) ELECTRIC CABLE IN CONDUIT, 600V (XLP-TYPE USE) 2-1C NO.10, 1/C NO.10 GROUND, IN CONDUIT ATTACHED TO STRUCTURE, 1" DIA., SS

NOTES:

1. PROVIDE ONE (1) 2-POLE, 30A, 600V CIRCUIT BREAKER AND ONE (1) SURGE PROTECTION DEVICE (IN ACCORDANCE WITH ARTICLE 1065.02 OF THE STANDARD SPECIFICATIONS).
2. NOT SHOWN FOR CLARITY. REFER TO HIGHWAY STANDARD DRAWINGS 821006 FOR DETAILS.
3. THE CONTRACTOR SHALL INSTALL UNDERGROUND CNC THROUGH STAINLESS STEEL CONDUIT ATTACHED TO STRUCTURE, AS SHOWN ON HIGHWAY STANDARD DRAWINGS 821001 AND 821006.
4. SEE SHEET L-33 FOR CABLE REQUIREMENTS.
5. REFER TO HIGHWAY STANDARD DRAWING 821006 FOR DETAILS. PROPOSED UNDERPASS LUMINAIRES SHALL BE SUSPENDED MOUNTED. LUMINAIRES SHALL BE OFFSET 6 FEET FROM EDGE OF PAVEMENT.

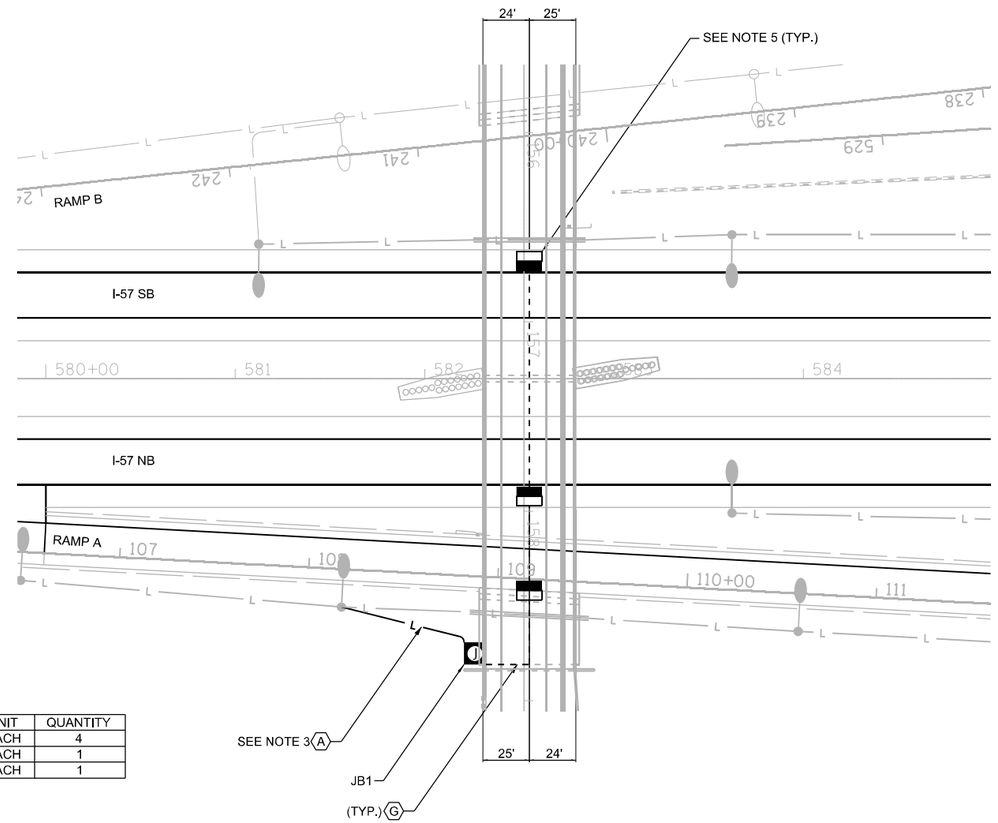

SCHEDULE OF QUANTITIES FOR UNDERPASS JUNCTION BOXES

PAY ITEM	DESCRIPTION	UNIT	QUANTITY
81300220	JUNCTION BOX, STAINLESS STEEL, ATTACHED TO STRUCTURE, 6" X 6" X 4"	EACH	4
81300530	JUNCTION BOX, STAINLESS STEEL, ATTACHED TO STRUCTURE, 12" X 10" X 6"	EACH	1
81300830	JUNCTION BOX, STAINLESS STEEL, ATTACHED TO STRUCTURE, 18" X 18" X 8"	EACH	1

FILE NAME = D570C01-lightup-4.dgn	USER NAME = bbarr	DESIGNED -	REVISED -	STATE OF ILLINOIS DEPARTMENT OF TRANSPORTATION	PROPOSED UNDERPASS LIGHTING PLAN US 150 OVER I-57	F.A.I. RTE.	SECTION	COUNTY	TOTAL SHEETS	SHEET NO.
		DRAWN -	REVISED -			57	10-(33,34,5,14)R & (10-34)B	CHAMPAIGN	1182	871
	PLOT SCALE = 80.0000 ' / in.	CHECKED -	REVISED -					CONTRACT NO. 70C01		
	PLOT DATE = 2/27/2022	DATE -	REVISED -		SCALE: 1"=40' SHEET 47 OF 58 SHEETS STA. TO STA.		ILLINOIS FED. AID PROJECT			

LIGHTING LEGEND

PROPOSED JUNCTION BOX, STAINLESS STEEL, ATTACHED TO STRUCTURE

JB1	18" X 18" X 8" (SEE NOTE 1)
JB2	12" X 10" X 6" (SEE NOTE 2)
JB3	6" X 6" X 4" (SEE NOTE 2)

CABLE TAGS

(A) UNIT DUCT, 600V, 2-1C NO.6, 1/C NO.8 GROUND, (XLP-TYPE USE), 1" DIA. POLYETHYLENE

(G) ELECTRIC CABLE IN CONDUIT, 600V (XLP-TYPE USE) 2-1C NO.10, 1/C NO.10 GROUND, IN CONDUIT ATTACHED TO STRUCTURE, 1" DIA., SS

(H) ELECTRIC CABLE IN CONDUIT, 600V (XLP-TYPE USE) 2-1C NO.6, 1/C NO.8 GROUND, IN CONDUIT ATTACHED TO STRUCTURE, 1" DIA., SS

NOTES:

1. PROVIDE ONE (1) 2-POLE, 30A, 600V CIRCUIT BREAKER AND ONE (1) SURGE PROTECTION DEVICE (IN ACCORDANCE WITH ARTICLE 1065.02 OF THE STANDARD SPECIFICATIONS).
2. NOT SHOWN FOR CLARITY. REFER TO HIGHWAY STANDARD DRAWINGS 821006 FOR DETAILS.
3. THE CONTRACTOR SHALL INSTALL UNDERGROUND CNC THROUGH STAINLESS STEEL CONDUIT ATTACHED TO STRUCTURE, AS SHOWN ON HIGHWAY STANDARD DRAWINGS 821001 AND 821006.
4. SEE FIGURE A ON SHEET L-55 FOR TYPICAL DETAILS AND REFER TO HIGHWAY STANDARD DRAWING 821006 FOR ADDITIONAL DETAILS. PROPOSED UNDERPASS LUMINAIRES SHALL BE SUSPENDED MOUNTED. LUMINAIRES SHALL BE OFFSET 6 FEET FROM EDGE OF PAVEMENT.
5. SEE FIGURE B ON SHEET L-55 FOR TYPICAL DETAILS AND REFER TO HIGHWAY STANDARD DRAWING 821006 FOR ADDITIONAL DETAILS. PROPOSED UNDERPASS LUMINAIRES SHALL BE SUSPENDED MOUNTED. LUMINAIRES SHALL BE OFFSET 6 FEET FROM EDGE OF PAVEMENT.

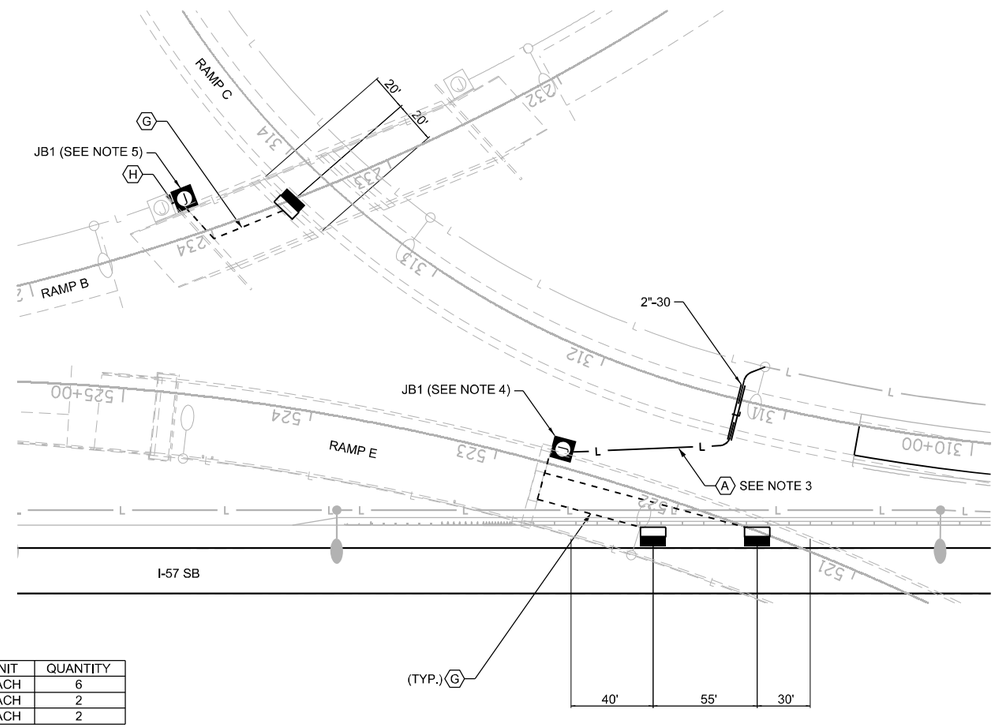

SCHEDULE OF QUANTITIES FOR UNDERPASS JUNCTION BOXES

PAY ITEM	DESCRIPTION	UNIT	QUANTITY
81300220	JUNCTION BOX, STAINLESS STEEL, ATTACHED TO STRUCTURE, 6" X 6" X 4"	EACH	6
81300530	JUNCTION BOX, STAINLESS STEEL, ATTACHED TO STRUCTURE, 12" X 10" X 6"	EACH	2
81300830	JUNCTION BOX, STAINLESS STEEL, ATTACHED TO STRUCTURE, 18" X 18" X 8"	EACH	2

FILE NAME = D570C01-lightup-5.dgn	USER NAME = bbarr	DESIGNED -	REVISED -
		DRAWN -	REVISED -
	PLOT SCALE = 80.0000 ' / in.	CHECKED -	REVISED -
	PLOT DATE = 2/27/2022	DATE -	REVISED -

STATE OF ILLINOIS
DEPARTMENT OF TRANSPORTATION

PROPOSED UNDERPASS LIGHTING PLAN
RAMP E OVER I-57 SB AND RAMP B OVER RAMP C

SCALE: 1"=40' | SHEET 48 OF 58 SHEETS | STA. TO STA.

F.A.I. RTE.	SECTION	COUNTY	TOTAL SHEETS	SHEET NO.
57	10-(33,34,5,14)R & (10-34)B	CHAMPAIGN	1182	872
		CONTRACT NO. 70C01		
		ILLINOIS FED. AID PROJECT		

LIGHTING LEGEND

PROPOSED JUNCTION BOX, STAINLESS STEEL, ATTACHED TO STRUCTURE

JB1 18" X 18" X 8" (SEE NOTE 1)
JB2 12" X 10" X 6" (SEE NOTE 2)
JB3 6" X 6" X 4" (SEE NOTE 2)

CABLE TAGS

G ELECTRIC CABLE IN CONDUIT, 600V (XLP-TYPE USE) 2-1C NO.10, 1/C NO.10 GROUND, IN CONDUIT ATTACHED TO STRUCTURE, 1" DIA., SS

H ELECTRIC CABLE IN CONDUIT, 600V (XLP-TYPE USE) 2-1C NO.6, 1/C NO.8 GROUND, IN CONDUIT ATTACHED TO STRUCTURE, 1" DIA., SS

NOTES:

1. PROVIDE ONE (1) 2-POLE, 30A, 600V CIRCUIT BREAKER AND ONE (1) SURGE PROTECTION DEVICE (IN ACCORDANCE WITH ARTICLE 1065.02 OF THE STANDARD SPECIFICATIONS).
2. NOT SHOWN FOR CLARITY. REFER TO HIGHWAY STANDARD DRAWINGS 821006 FOR DETAILS.
3. SEE FIGURE B ON SHEET L-55 FOR TYPICAL DETAILS AND REFER TO HIGHWAY STANDARD DRAWING 821006 FOR ADDITIONAL DETAILS. PROPOSED UNDERPASS LUMINAIRES SHALL BE SUSPENDED MOUNTED. LUMINAIRES SHALL BE OFFSET 6 FEET FROM EDGE OF PAVEMENT.

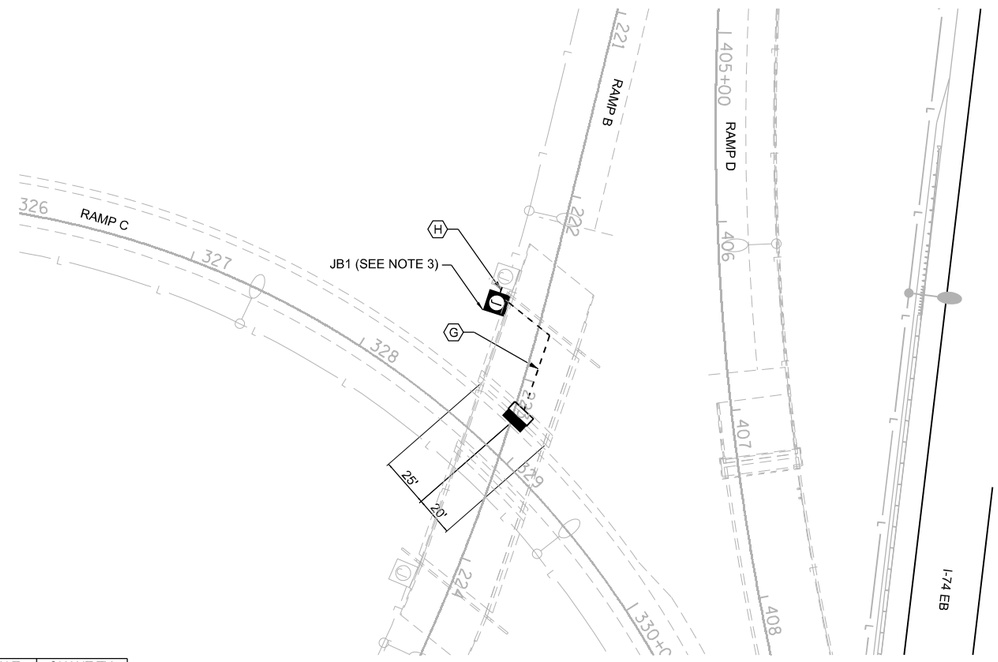

SCHEDULE OF QUANTITIES FOR UNDERPASS JUNCTION BOXES

PAY ITEM	DESCRIPTION	UNIT	QUANTITY
81300220	JUNCTION BOX, STAINLESS STEEL, ATTACHED TO STRUCTURE, 6" X 6" X 4"	EACH	2
81300530	JUNCTION BOX, STAINLESS STEEL, ATTACHED TO STRUCTURE, 12" X 10" X 6"	EACH	1
81300830	JUNCTION BOX, STAINLESS STEEL, ATTACHED TO STRUCTURE, 18" X 18" X 8"	EACH	1

FILE NAME = D570C01-lightup-6.dgn	USER NAME = bbarr	DESIGNED -	REVISED -
		DRAWN -	REVISED -
	PLOT SCALE = 80.0000 ' / in.	CHECKED -	REVISED -
	PLOT DATE = 2/27/2022	DATE -	REVISED -

STATE OF ILLINOIS
DEPARTMENT OF TRANSPORTATION

PROPOSED UNDERPASS LIGHTING PLAN
RAMP B OVER RAMP C

SCALE: 1"=40' | SHEET 49 OF 58 SHEETS | STA. TO STA.

F.A.I. RTE.	SECTION	COUNTY	TOTAL SHEETS	SHEET NO.
57	10-(33,34,5,14)R & (10-34)B	CHAMPAIGN	1182	873
		CONTRACT NO. 70C01		
	ILLINOIS	FED. AID PROJECT		

LIGHTING LEGEND

PROPOSED JUNCTION BOX, STAINLESS STEEL, ATTACHED TO STRUCTURE

JB1 18" X 18" X 8" (SEE NOTE 1)
JB2 12" X 10" X 6" (SEE NOTE 2)
JB3 6" X 6" X 4" (SEE NOTE 2)

CABLE TAGS

(A) UNIT DUCT, 600V, 2-1C NO.6, 1/C NO.8 GROUND, (XLP-TYPE USE), 1" DIA. POLYETHYLENE

(B) UNIT DUCT, 600V, 2-1C NO.8, 1/C NO.8 GROUND, (XLP-TYPE USE), 3/4" DIA. POLYETHYLENE

(G) ELECTRIC CABLE IN CONDUIT, 600V (XLP-TYPE USE) 2-1C NO.10, 1/C NO.10 GROUND, IN CONDUIT ATTACHED TO STRUCTURE, 1" DIA., SS

NOTES:

1. PROVIDE ONE (1) 2-POLE, 30A, 600V CIRCUIT BREAKER AND ONE (1) SURGE PROTECTION DEVICE (IN ACCORDANCE WITH ARTICLE 1065.02 OF THE STANDARD SPECIFICATIONS).
2. NOT SHOWN FOR CLARITY. REFER TO HIGHWAY STANDARD DRAWINGS 821006 FOR DETAILS.
3. THE CONTRACTOR SHALL INSTALL UNDERGROUND CNC THROUGH STAINLESS STEEL CONDUIT ATTACHED TO STRUCTURE, AS SHOWN ON HIGHWAY STANDARD DRAWINGS 821001 AND 821006.
4. SEE FIGURE A ON SHEET L-55 FOR TYPICAL DETAILS AND REFER TO HIGHWAY STANDARD DRAWING 821006 FOR ADDITIONAL DETAILS. PROPOSED UNDERPASS LUMINAIRES SHALL BE SUSPENDED MOUNTED. LUMINAIRES SHALL BE OFFSET 6 FEET FROM EDGE OF PAVEMENT.
5. FINAL CABLE CONNECTION IS SHOWN. THE CONTRACTOR SHALL ENSURE CONTINUITY OF THE CIRCUITS VIA TEMPORARY CABLE FEED TO TEMPORARY LIGHT POLE UNTIL FINAL CONNECTION CAN BE MADE. THIS WORK SHALL BE PAID FOR AS "MAINTAIN EXISTING LIGHTING SYSTEM".

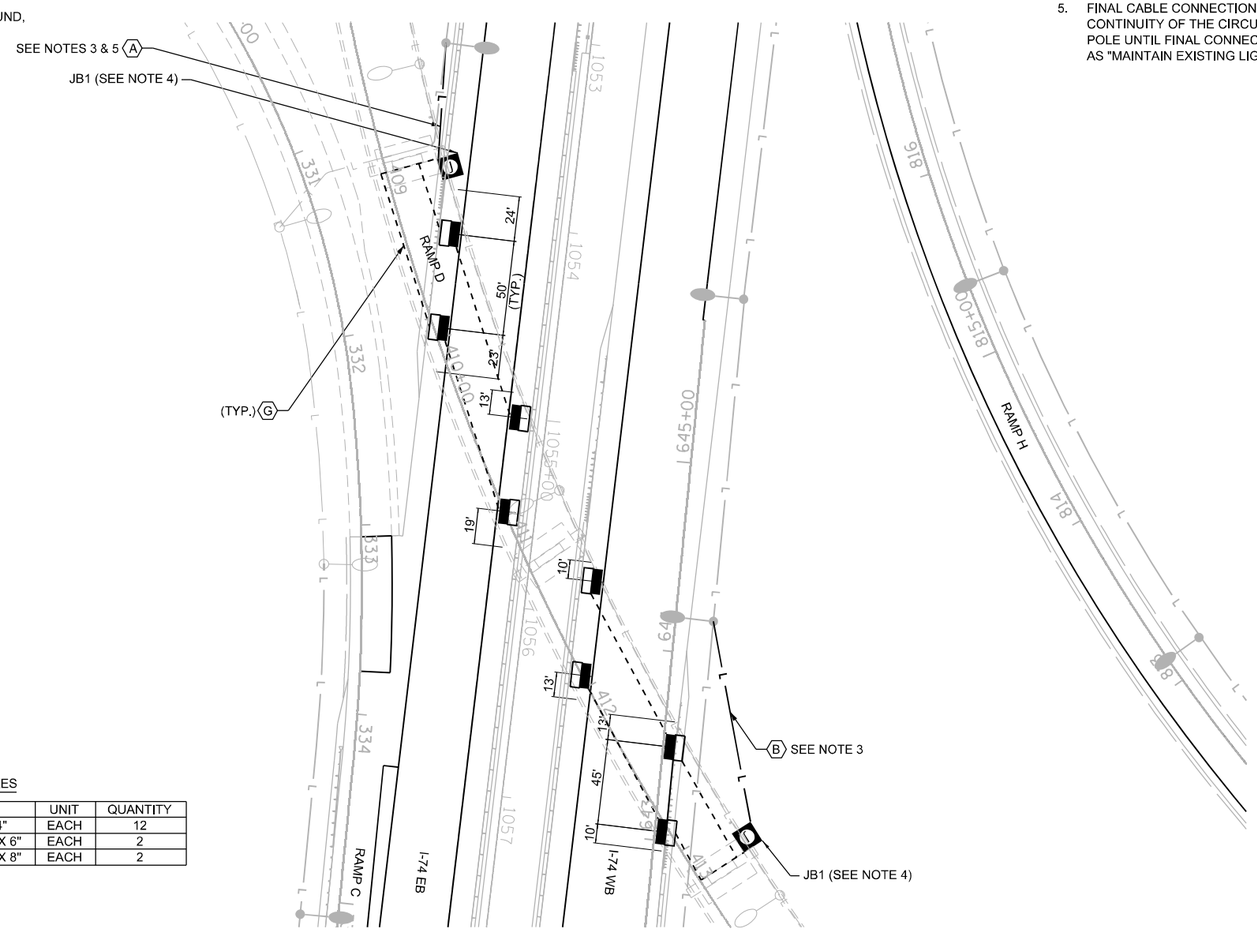

SCHEDULE OF QUANTITIES FOR UNDERPASS JUNCTION BOXES

PAY ITEM	DESCRIPTION	UNIT	QUANTITY
81300220	JUNCTION BOX, STAINLESS STEEL, ATTACHED TO STRUCTURE, 6" X 6" X 4"	EACH	12
81300530	JUNCTION BOX, STAINLESS STEEL, ATTACHED TO STRUCTURE, 12" X 10" X 6"	EACH	2
81300830	JUNCTION BOX, STAINLESS STEEL, ATTACHED TO STRUCTURE, 18" X 18" X 8"	EACH	2

FILE NAME = D570C01-lightup-7.dgn	USER NAME = bbarr	DESIGNED -	REVISED -
		DRAWN -	REVISED -
	PLOT SCALE = 80.0000 ' / in.	CHECKED -	REVISED -
	PLOT DATE = 2/27/2022	DATE -	REVISED -

STATE OF ILLINOIS
DEPARTMENT OF TRANSPORTATION

PROPOSED UNDERPASS LIGHTING PLAN
RAMP D OVER I-74

SCALE: 1"=40' | SHEET 50 OF 58 SHEETS | STA. TO STA.

F.A.I. RTE.	SECTION	COUNTY	TOTAL SHEETS	SHEET NO.
57	10-(33,34,5,14)R & (10-34)B	CHAMPAIGN	1182	874

CONTRACT NO. 70C01

ILLINOIS FED. AID PROJECT

LIGHTING LEGEND

PROPOSED JUNCTION BOX, STAINLESS STEEL, ATTACHED TO STRUCTURE

JB1 18" X 18" X 8" (SEE NOTE 1)
JB2 12" X 10" X 6" (SEE NOTE 2)
JB3 6" X 6" X 4" (SEE NOTE 2)

CABLE TAGS

(A) UNIT DUCT, 600V, 2-1C NO.6, 1/C NO.8 GROUND, (XLP-TYPE USE), 1" DIA. POLYETHYLENE

(G) ELECTRIC CABLE IN CONDUIT, 600V (XLP-TYPE USE) 2-1C NO.10, 1/C NO.10 GROUND, IN CONDUIT ATTACHED TO STRUCTURE, 1" DIA., SS

NOTES:

1. PROVIDE ONE (1) 2-POLE, 30A, 600V CIRCUIT BREAKER AND ONE (1) SURGE PROTECTION DEVICE (IN ACCORDANCE WITH ARTICLE 1065.02 OF THE STANDARD SPECIFICATIONS).
2. NOT SHOWN FOR CLARITY. REFER TO HIGHWAY STANDARD DRAWINGS 821006 FOR DETAILS.
3. THE CONTRACTOR SHALL INSTALL UNDERGROUND CNC THROUGH STAINLESS STEEL CONDUIT ATTACHED TO STRUCTURE, AS SHOWN ON HIGHWAY STANDARD DRAWINGS 821001 AND 821006.
4. SEE FIGURE A ON SHEET L-55 FOR TYPICAL DETAILS AND REFER TO HIGHWAY STANDARD DRAWING 821006 FOR ADDITIONAL DETAILS. PROPOSED UNDERPASS LUMINAIRES SHALL BE SUSPENDED MOUNTED. LUMINAIRES SHALL BE OFFSET 6 FEET FROM EDGE OF PAVEMENT.
5. FINAL CABLE CONNECTION IS SHOWN. THE CONTRACTOR SHALL ENSURE CONTINUITY OF THE CIRCUITS VIA TEMPORARY CABLE FEED TO TEMPORARY LIGHT POLE UNTIL FINAL CONNECTION CAN BE MADE. THIS WORK SHALL BE PAID FOR AS "MAINTAIN EXISTING LIGHTING SYSTEM".

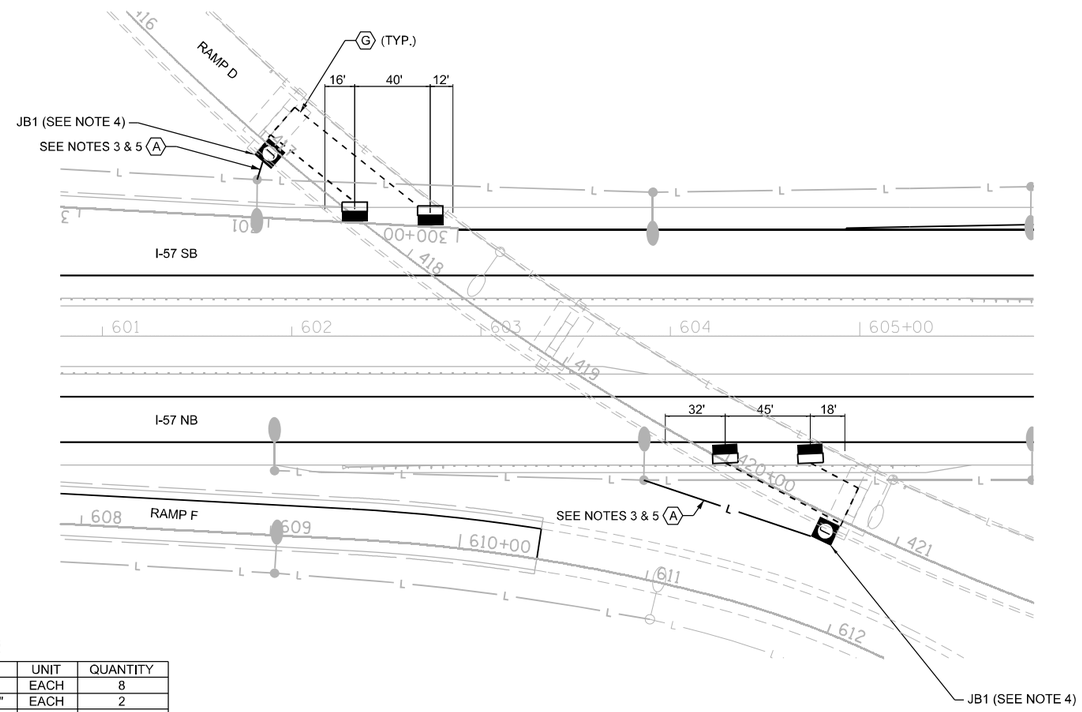

SCHEDULE OF QUANTITIES FOR UNDERPASS JUNCTION BOXES

PAY ITEM	DESCRIPTION	UNIT	QUANTITY
81300220	JUNCTION BOX, STAINLESS STEEL, ATTACHED TO STRUCTURE, 6" X 6" X 4"	EACH	8
81300530	JUNCTION BOX, STAINLESS STEEL, ATTACHED TO STRUCTURE, 12" X 10" X 6"	EACH	2
81300830	JUNCTION BOX, STAINLESS STEEL, ATTACHED TO STRUCTURE, 18" X 18" X 8"	EACH	2

FILE NAME = D570C01-lightup-8.dgn	USER NAME = bbarr	DESIGNED -	REVISED -	STATE OF ILLINOIS DEPARTMENT OF TRANSPORTATION	PROPOSED UNDERPASS LIGHTING PLAN RAMP D OVER I-57	F.A.I. RTE. 57	SECTION 10-(33,34,5,14)R & (10-34)B	COUNTY CHAMPAIGN	TOTAL SHEETS 1182 / SHEET NO. 875
		DRAWN -	REVISED -					CONTRACT NO. 70C01	
	PLOT SCALE = 80.0000 ' / in.	CHECKED -	REVISED -						
	PLOT DATE = 2/27/2022	DATE -	REVISED -		SCALE: 1"=40' SHEET 51 OF 58 SHEETS STA. TO STA.		ILLINOIS FED. AID PROJECT		

LIGHTING LEGEND

PROPOSED JUNCTION BOX, STAINLESS STEEL, ATTACHED TO STRUCTURE

JB1 18" X 18" X 8" (SEE NOTE 1)
JB2 12" X 10" X 6" (SEE NOTE 2)
JB3 6" X 6" X 4" (SEE NOTE 2)

CABLE TAGS

G ELECTRIC CABLE IN CONDUIT, 600V (XLP-TYPE USE) 2-1C NO.10, 1/C NO.10 GROUND, IN CONDUIT ATTACHED TO STRUCTURE, 1" DIA., SS

H ELECTRIC CABLE IN CONDUIT, 600V (XLP-TYPE USE) 2-1C NO.6, 1/C NO.8 GROUND, IN CONDUIT ATTACHED TO STRUCTURE, 1" DIA., SS

NOTES:

1. PROVIDE ONE (1) 2-POLE, 30A, 600V CIRCUIT BREAKER AND ONE (1) SURGE PROTECTION DEVICE (IN ACCORDANCE WITH ARTICLE 1065.02 OF THE STANDARD SPECIFICATIONS).
2. NOT SHOWN FOR CLARITY. REFER TO HIGHWAY STANDARD DRAWINGS 821006 FOR DETAILS.
3. SEE FIGURE B ON SHEET L-55 FOR TYPICAL DETAILS AND REFER TO HIGHWAY STANDARD DRAWING 821006 FOR ADDITIONAL DETAILS. PROPOSED UNDERPASS LUMINAIRES SHALL BE SUSPENDED MOUNTED. LUMINAIRES SHALL BE OFFSET 6 FEET FROM EDGE OF PAVEMENT.

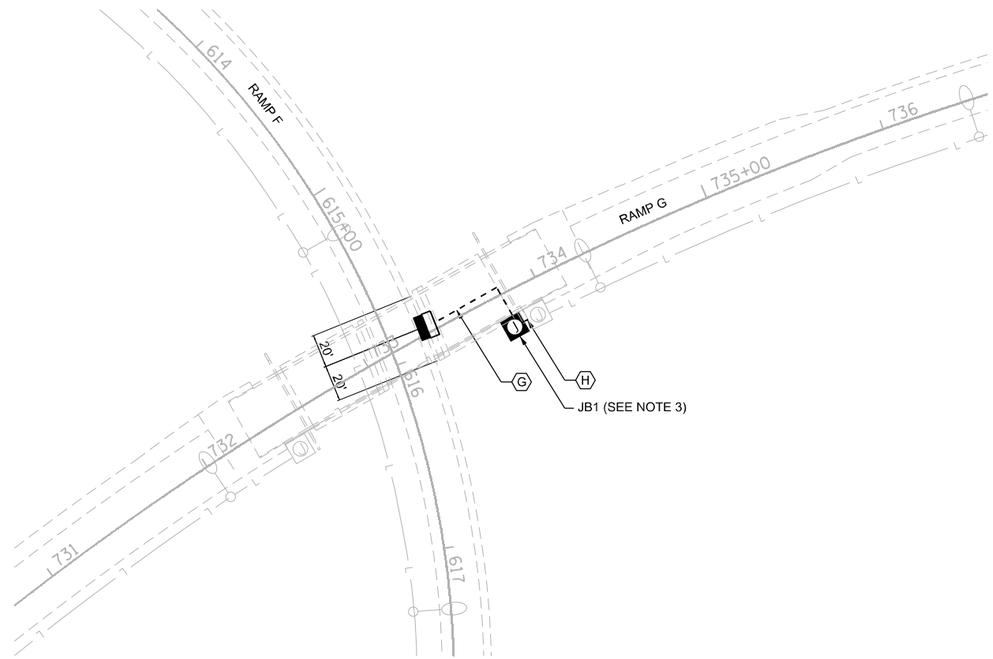

SCHEDULE OF QUANTITIES FOR UNDERPASS JUNCTION BOXES

PAY ITEM	DESCRIPTION	UNIT	QUANTITY
81300220	JUNCTION BOX, STAINLESS STEEL, ATTACHED TO STRUCTURE, 6" X 6" X 4"	EACH	2
81300530	JUNCTION BOX, STAINLESS STEEL, ATTACHED TO STRUCTURE, 12" X 10" X 6"	EACH	1
81300830	JUNCTION BOX, STAINLESS STEEL, ATTACHED TO STRUCTURE, 18" X 18" X 8"	EACH	1

FILE NAME = D570C01-lightup-9.dgn	USER NAME = bbarr	DESIGNED -	REVISED -
		DRAWN -	REVISED -
	PLOT SCALE = 80.0000 ' / in.	CHECKED -	REVISED -
	PLOT DATE = 2/27/2022	DATE -	REVISED -

STATE OF ILLINOIS
DEPARTMENT OF TRANSPORTATION

PROPOSED UNDERPASS LIGHTING PLAN
RAMP G OVER RAMP F

SCALE: 1"=40' | SHEET 52 OF 58 SHEETS | STA. TO STA.

F.A.I. RTE.	SECTION	COUNTY	TOTAL SHEETS	SHEET NO.
57	10-(33,34,5,14)R & (10-34)B	CHAMPAIGN	1182	876
		CONTRACT NO. 70C01		
	ILLINOIS FED. AID PROJECT			

LIGHTING LEGEND

PROPOSED JUNCTION BOX, STAINLESS STEEL, ATTACHED TO STRUCTURE

JB1 18" X 18" X 8" (SEE NOTE 1)
JB2 12" X 10" X 6" (SEE NOTE 2)
JB3 6" X 6" X 4" (SEE NOTE 2)

CABLE TAGS

(A) UNIT DUCT, 600V, 2-1C NO.6, 1/C NO.8 GROUND, (XLP-TYPE USE), 1" DIA. POLYETHYLENE

(G) ELECTRIC CABLE IN CONDUIT, 600V (XLP-TYPE USE) 2-1C NO.10, 1/C NO.10 GROUND, IN CONDUIT ATTACHED TO STRUCTURE, 1" DIA., SS

(H) ELECTRIC CABLE IN CONDUIT, 600V (XLP-TYPE USE) 2-1C NO.6, 1/C NO.8 GROUND, IN CONDUIT ATTACHED TO STRUCTURE, 1" DIA., SS

NOTES:

1. PROVIDE ONE (1) 2-POLE, 30A, 600V CIRCUIT BREAKER AND ONE (1) SURGE PROTECTION DEVICE (IN ACCORDANCE WITH ARTICLE 1065.02 OF THE STANDARD SPECIFICATIONS).
2. NOT SHOWN FOR CLARITY. REFER TO HIGHWAY STANDARD DRAWINGS 821006 FOR DETAILS.
3. THE CONTRACTOR SHALL INSTALL UNDERGROUND CNC THROUGH STAINLESS STEEL CONDUIT ATTACHED TO STRUCTURE, AS SHOWN ON HIGHWAY STANDARD DRAWINGS 821001 AND 821006.
4. SEE FIGURE A ON SHEET L-55 FOR TYPICAL DETAILS AND REFER TO HIGHWAY STANDARD DRAWING 821006 FOR ADDITIONAL DETAILS. PROPOSED UNDERPASS LUMINAIRES SHALL BE SUSPENDED MOUNTED. LUMINAIRES SHALL BE OFFSET 6 FEET FROM EDGE OF PAVEMENT.
5. SEE FIGURE B ON SHEET L-55 FOR TYPICAL DETAILS AND REFER TO HIGHWAY STANDARD DRAWING 821006 FOR ADDITIONAL DETAILS. PROPOSED UNDERPASS LUMINAIRES SHALL BE SUSPENDED MOUNTED. LUMINAIRES SHALL BE OFFSET 6 FEET FROM EDGE OF PAVEMENT.

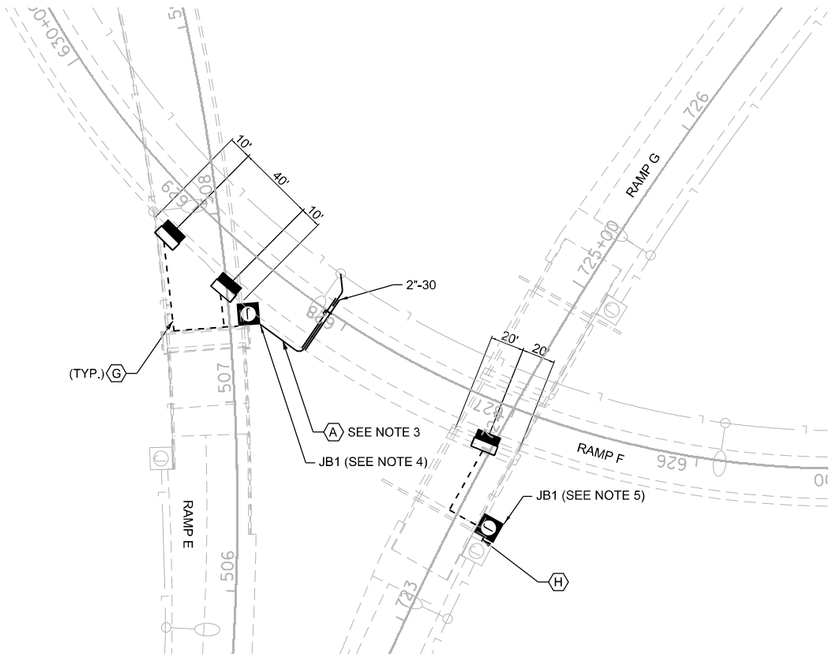

SCHEDULE OF QUANTITIES FOR UNDERPASS JUNCTION BOXES

PAY ITEM	DESCRIPTION	UNIT	QUANTITY
81300220	JUNCTION BOX, STAINLESS STEEL, ATTACHED TO STRUCTURE, 6" X 6" X 4"	EACH	6
81300530	JUNCTION BOX, STAINLESS STEEL, ATTACHED TO STRUCTURE, 12" X 10" X 6"	EACH	2
81300830	JUNCTION BOX, STAINLESS STEEL, ATTACHED TO STRUCTURE, 18" X 18" X 8"	EACH	2

FILE NAME = D570C01-lightup-10.dgn	USER NAME = bbarr	DESIGNED -	REVISED -	STATE OF ILLINOIS DEPARTMENT OF TRANSPORTATION	PROPOSED UNDERPASS LIGHTING PLAN RAMP F UNDER RAMP G AND RAMP E	F.A.I. RTE.	SECTION	COUNTY	TOTAL SHEETS / SHEET NO.
		DRAWN -	REVISED -			57	10-(33,34,5,14)R & (10-34)B	CHAMPAIGN	1182 / 877
	PLOT SCALE = 80.0000 ' / in.	CHECKED -	REVISED -					CONTRACT NO. 70C01	
	PLOT DATE = 2/27/2022	DATE -	REVISED -		SCALE: 1"=40' / SHEET 53 OF 58 SHEETS / STA. TO STA.		ILLINOIS	FED. AID PROJECT	

LIGHTING LEGEND

PROPOSED JUNCTION BOX, STAINLESS STEEL, ATTACHED TO STRUCTURE

JB1 18" X 18" X 8" (SEE NOTE 1)
JB2 12" X 10" X 6" (SEE NOTE 2)
JB3 6" X 6" X 4" (SEE NOTE 2)

CABLE TAGS

(A) UNIT DUCT, 600V, 2-1C NO.6, 1/C NO.8 GROUND, (XLP-TYPE USE), 1" DIA. POLYETHYLENE

(B) UNIT DUCT, 600V, 2-1C NO.8, 1/C NO.8 GROUND, (XLP-TYPE USE), 3/4" DIA. POLYETHYLENE

(G) ELECTRIC CABLE IN CONDUIT, 600V (XLP-TYPE USE) 2-1C NO.10, 1/C NO.10 GROUND, IN CONDUIT ATTACHED TO STRUCTURE, 1" DIA., SS

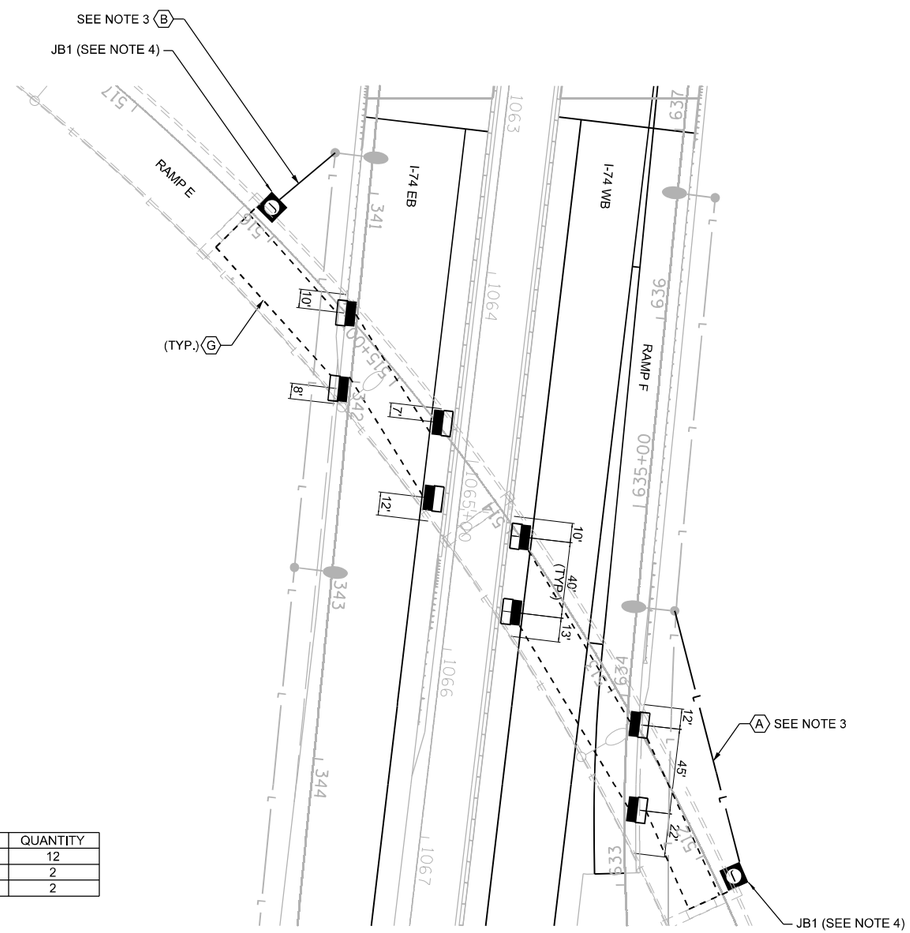

NOTES:

1. PROVIDE ONE (1) 2-POLE, 30A, 600V CIRCUIT BREAKER AND ONE (1) SURGE PROTECTION DEVICE (IN ACCORDANCE WITH ARTICLE 1065.02 OF THE STANDARD SPECIFICATIONS).
2. NOT SHOWN FOR CLARITY. REFER TO HIGHWAY STANDARD DRAWINGS 821006 FOR DETAILS.
3. THE CONTRACTOR SHALL INSTALL UNDERGROUND CNC THROUGH STAINLESS STEEL CONDUIT ATTACHED TO STRUCTURE, AS SHOWN ON HIGHWAY STANDARD DRAWINGS 821001 AND 821006.
4. SEE FIGURE A ON SHEET L-55 FOR TYPICAL DETAILS AND REFER TO HIGHWAY STANDARD DRAWING 821006 FOR ADDITIONAL DETAILS. PROPOSED UNDERPASS LUMINAIRES SHALL BE SUSPENDED MOUNTED. LUMINAIRES SHALL BE OFFSET 6 FEET FROM EDGE OF PAVEMENT.

SCHEDULE OF QUANTITIES FOR UNDERPASS JUNCTION BOXES

PAY ITEM	DESCRIPTION	UNIT	QUANTITY
81300220	JUNCTION BOX, STAINLESS STEEL, ATTACHED TO STRUCTURE, 6" X 6" X 4"	EACH	12
81300530	JUNCTION BOX, STAINLESS STEEL, ATTACHED TO STRUCTURE, 12" X 10" X 6"	EACH	2
81300830	JUNCTION BOX, STAINLESS STEEL, ATTACHED TO STRUCTURE, 18" X 18" X 8"	EACH	2

FILE NAME = D570C01-lightup-11.dgn	USER NAME = bbarr	DESIGNED -	REVISED -
		DRAWN -	REVISED -
	PLOT SCALE = 80.0000 ' / in.	CHECKED -	REVISED -
	PLOT DATE = 2/27/2022	DATE -	REVISED -

STATE OF ILLINOIS
DEPARTMENT OF TRANSPORTATION

PROPOSED UNDERPASS LIGHTING PLAN
RAMP E OVER I-74

SCALE: 1"=40' | SHEET 54 OF 58 SHEETS | STA. TO STA.

F.A.I. RTE.	SECTION	COUNTY	TOTAL SHEETS	SHEET NO.
57	10-(33,34,5,14)R & (10-34)B	CHAMPAIGN	1182	878
		CONTRACT NO. 70C01		
	ILLINOIS FED. AID PROJECT			

NOTES:

1. SEE UNDERPASS LIGHTING PLANS FOR DETAILS.

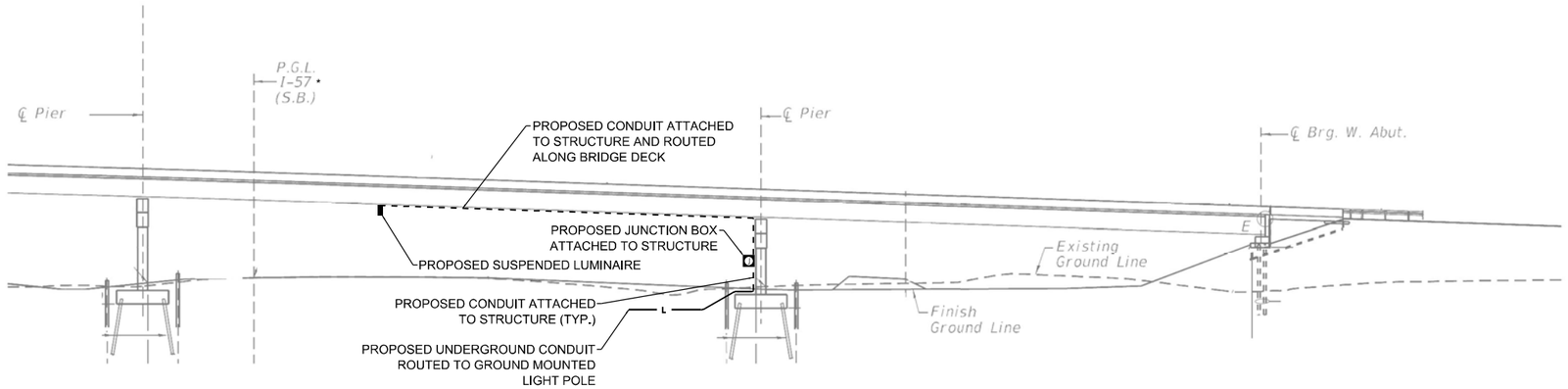

FIGURE A

*THE SPECIFIC LOCATION SHOWN IS PROVIDED FOR INFORMATION ONLY.

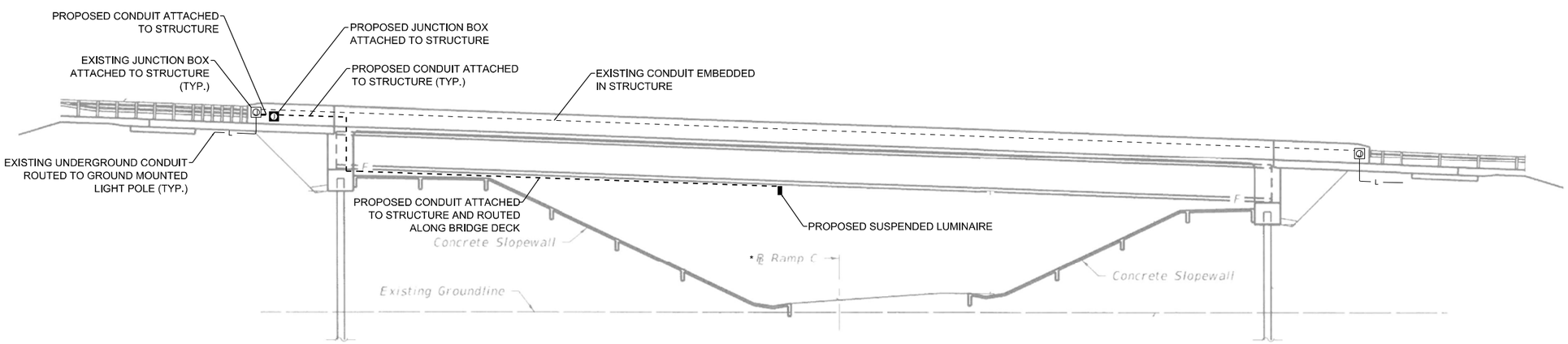

FIGURE B

*THE SPECIFIC LOCATION SHOWN IS PROVIDED FOR INFORMATION ONLY.

FILE NAME = D570C01-lightdtl-1.dgn	USER NAME = bbarr	DESIGNED -	REVISED -	STATE OF ILLINOIS DEPARTMENT OF TRANSPORTATION	UNDERPASS CONDUIT ROUTING DETAILS			F.A.I. RTE.	SECTION	COUNTY	TOTAL SHEETS / SHEET NO.
		DRAWN -	REVISED -					57	10-(33,34,5,14)R & (10-34)B	CHAMPAIGN	1182 / 879
	PLOT SCALE = 100.0000 ' / in.	CHECKED -	REVISED -							CONTRACT NO. 70C01	
	PLOT DATE = 2/27/2022	DATE -	REVISED -		SCALE: NONE	SHEET 55 OF 58 SHEETS	STA. TO STA.		ILLINOIS FED. AID PROJECT		

LUMINAIRE PERFORMANCE TABLE
TEMPORARY LUMINAIRE, LED, ROADWAY, OUTPUT DESIGNATION I

Project

Date	Contract Number	Section Number	County
7-29-2021	70C01	10-(33,34,5,14)R & (10-34)B	CHAMPAIGN

Marked Route Number	Municipality

Roadway

Lane Width	#of Lanes	Median Width	I.E.S Surface Classification	Q-Zero Value
24 ft	2	40 ft	R3	0.07

Structure

Mounting Height	Arm Length	Set Back	Number of Luminaires (Highmast & Sign Lighting Only)
50 ft	15 ft	50 ft	N/A

Luminaire

Description	I.E.S. Transverse Distribution	I.E.S. Lateral Distribution
TEMPORARY LUMINAIRE, LED, ROADWAY, DESIGNATION I	TYPE III	MEDIUM

Total Light Loss Factor (LLF)	BUG Rating	Shields	Dimming Protocol
0.7	U = 0	NO	0-10V

Layout

Spacing (to Nearest 5 Ft)	Configuration (Opposite, Staggered, 1 Sided, or Median)
240 ft	TWO ROWS, OPPOSITE, WITH MEDIAN

Performance

Average Illuminance, E_{AVE} (fc)	Uniformity Ratio, E_{AVE}/E_{MIN}
≥ 0.9	≤ 3.0:1

Average Luminance, L_{AVE}(cd/m^2)	Uniformity Ratio, L_{AVE}/L_{MIN}	Uniformity Ratio, L_{MAX}/L_{MIN}	Veiling Luminance Ratio, L_V/L_{MIN}
≥ 0.6	≤ 3.5:1	≤ 6.0:1	≤ 0.3

Light Tresspass

Distance to ROW (behind pole)	Max. Horizontal Illuminance at ROW, E_H	Max. Vertical Illuminance at ROW, E_V
N/A	N/A	N/A

Notes

1. Set Back is from Edge of Pavement (white line) except for sign luminaires when it is vertical and horizontal distance from the sign to the luminaire.
2. Lighting calculations shall be performed with all luminaires oriented toward and perpendicular to roadway.
3. Total Light Loss Factor (LLF) = the product of "Lumen Maintenance" (LLD) = 0.9, "Dirt Depreciation" (LDD) = 0.8, and "Equipment Factors" (EF) = 0.95.
4. Performance requirements shall be the minimum acceptable standards of photometric performance for the luminaire, based on the given conditions above.
5. Lighting calculations shall be performed in one direction only.
6. Compliance with performance criteria shall be held to one significant digit.
7. Initial lumens of the proposed luminaire may vary from the values specified in the table given in Article 1067.06 of the BDE Special Provision Luminaire, LED.
8. Nominal lumen output of 40,000.

LUMINAIRE PERFORMANCE TABLE
LUMINAIRE, LED, ROADWAY, OUTPUT DESIGNATION H

Project

Date	Contract Number	Section Number	County
7-29-2021	70C01	10-(33,34,5,14)R & (10-34)B	CHAMPAIGN

Marked Route Number	Municipality

Roadway

Lane Width	#of Lanes	Median Width	I.E.S Surface Classification	Q-Zero Value
36 ft	3	64 ft	R3	0.07

Structure

Mounting Height	Arm Length	Set Back	Number of Luminaires (Highmast & Sign Lighting Only)
50 ft	15 ft	20 ft	N/A

Luminaire

Description	I.E.S. Transverse Distribution	I.E.S. Lateral Distribution
LUMINAIRE, LED, ROADWAY, DESIGNATION H	TYPE II	MEDIUM

Total Light Loss Factor (LLF)	BUG Rating	Shields	Dimming Protocol
0.7	U = 0	NO	0-10V

Layout

Spacing (to Nearest 5 Ft)	Configuration (Opposite, Staggered, 1 Sided, or Median)
230 ft	TWO ROWS, OPPOSITE, WITH MEDIAN

Performance

Average Illuminance, E_{AVE} (fc)	Uniformity Ratio, E_{AVE}/E_{MIN}
≥ 0.9	≤ 3.0:1

Average Luminance, L_{AVE}(cd/m^2)	Uniformity Ratio, L_{AVE}/L_{MIN}	Uniformity Ratio, L_{MAX}/L_{MIN}	Veiling Luminance Ratio, L_V/L_{MIN}
≥ 0.6	≤ 3.5:1	≤ 6.0:1	≤ 0.3

Light Tresspass

Distance to ROW (behind pole)	Max. Horizontal Illuminance at ROW, E_H	Max. Vertical Illuminance at ROW, E_V
N/A	N/A	N/A

Notes

1. Set Back is from Edge of Pavement (white line) except for sign luminaires when it is vertical and horizontal distance from the sign to the luminaire.
2. Lighting calculations shall be performed with all luminaires oriented toward and perpendicular to roadway.
3. Total Light Loss Factor (LLF) = the product of "Lumen Maintenance" (LLD) = 0.9, "Dirt Depreciation" (LDD) = 0.8, and "Equipment Factors" (EF) = 0.95.
4. Performance requirements shall be the minimum acceptable standards of photometric performance for the luminaire, based on the given conditions above.
5. Lighting calculations shall be performed in one direction only.
6. Compliance with performance criteria shall be held to one significant digit.
7. Initial lumens of the proposed luminaire may vary from the values specified in the table given in Article 1067.06 of the BDE Special Provision Luminaire, LED.
8. Nominal lumen output of 30,000.

LUMINAIRE PERFORMANCE TABLE
LUMINAIRE, LED, UNDERPASS, OUTPUT DESIGNATION E

Project

Date	Contract Number	Section Number	County
2-21-2022	70C01	10-(33,34,5,14)R & (10-34)B	CHAMPAIGN

Marked Route Number	Municipality

Roadway

Lane Width	#of Lanes	Median Width	I.E.S Surface Classification	Q-Zero Value
12 ft	1	N/A	R3	0.07

Structure

Mounting Height	Arm Length	Set Back	Number of Luminaires (Highmast & Sign Lighting Only)
20 ft	N/A	20 ft	N/A

Luminaire

Description	I.E.S. Transverse Distribution	I.E.S. Lateral Distribution
LUMINAIRE, LED, UNDERPASS, DESIGNATION E	TYPE II	MEDIUM/SHORT/VERY SHORT

Total Light Loss Factor (LLF)	BUG Rating	Shields	Dimming Protocol
0.7	U = 0	NO	0-10V

Layout

Spacing (to Nearest 5 Ft)	Configuration (Opposite, Staggered, 1 Sided, or Median)
35 ft	ONE ROW, NEAR SIDE

Performance

Average Illuminance, E_{AVE} (fc)	Uniformity Ratio, E_{AVE}/E_{MIN}
≥ 1.5	≤ 3.0:1

Average Luminance, L_{AVE}(cd/m^2)	Uniformity Ratio, L_{AVE}/L_{MIN}	Uniformity Ratio, L_{MAX}/L_{MIN}	Veiling Luminance Ratio, L_V/L_{MIN}
≥ 0.9 - 1.1 (Note 8)	≤ 3.5:1	≤ 6.0:1	≤ 0.3

Light Tresspass

Distance to ROW (behind pole)	Max. Horizontal Illuminance at ROW, E_H	Max. Vertical Illuminance at ROW, E_V
N/A	N/A	N/A

Notes

1. Set Back is from Edge of Pavement (white line) except for sign luminaires when it is vertical and horizontal distance from the sign to the luminaire.
2. Lighting calculations shall be performed with all luminaires oriented toward and perpendicular to roadway.
3. Total Light Loss Factor (LLF) = the product of "Lumen Maintenance" (LLD) = 0.9, "Dirt Depreciation" (LDD) = 0.8, and "Equipment Factors" (EF) = 0.95.
4. Performance requirements shall be the minimum acceptable standards of photometric performance for the luminaire, based on the given conditions above.
5. Lighting calculations shall be performed in one direction only.
6. Compliance with performance criteria shall be held to one significant digit.
7. Initial lumens of the proposed luminaire may vary from the values specified in the table given in Article 1067.06 of the BDE Special Provision Luminaire, LED.
8. The underpass luminaire shall be tilted, as necessary, to meet the performance requirements. The Contractor shall install the underpass luminaire at the designed tilt.

NOTES:

1. ALL NECESSARY REVISIONS TO THE WIRING SHOWN ON THIS SHEET SHALL BE MADE AT NO ADDITIONAL COST TO THE DEPARTMENT AND TO THE SATISFACTION OF THE ENGINEER.

PROPOSED ROADWAY LUMINAIRE, LED

PROPOSED UNDERPASS LUMINAIRE, LED

EXISTING ROADWAY LUMINAIRE, LED INSTALLED UNDER CONTRACT 70B99

JUNCTION BOX

GROUND ROD

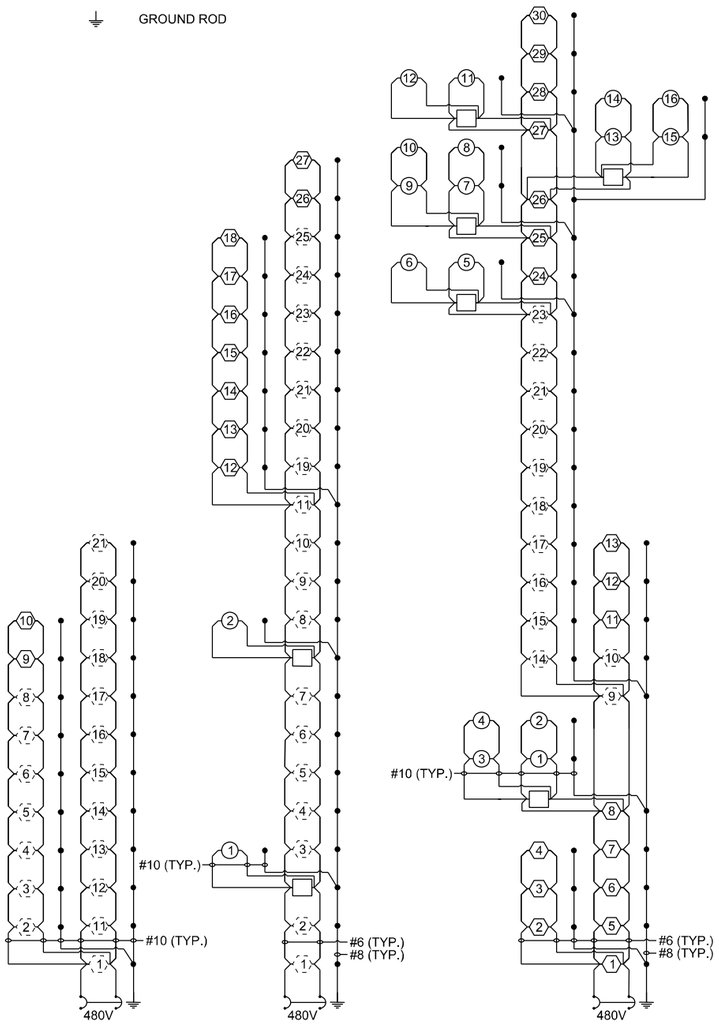

EXISTING LIGHTING CONTROLLER "49"
BASE MOUNTED, 480V

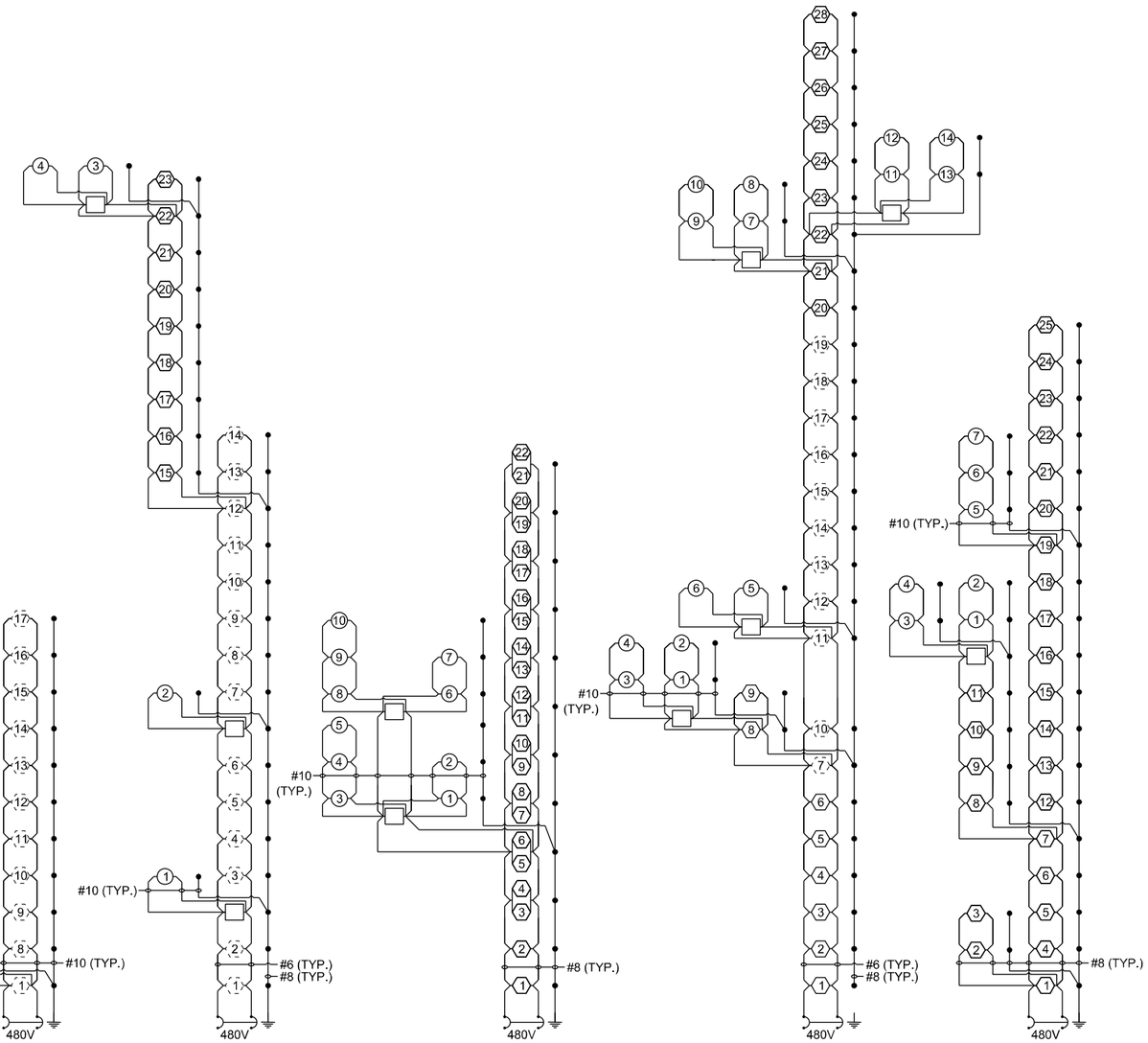

EXISTING LIGHTING CONTROLLER "50"
BASE MOUNTED, 480V

L-57

FILE NAME = D570C01-lightdtl-3.dgn	USER NAME = bbarr	DESIGNED -	REVISED -	STATE OF ILLINOIS DEPARTMENT OF TRANSPORTATION	WIRING DIAGRAMS	F.A.I. RTE.	SECTION	COUNTY	TOTAL SHEETS	SHEET NO.
		DRAWN -	REVISED -			57	10-(33,34,5,14)R & (10-34)B	CHAMPAIGN	1182	881
	PLOT SCALE = 100.0000 ' / in.	CHECKED -	REVISED -					CONTRACT NO. 70C01		
	PLOT DATE = 2/27/2022	DATE -	REVISED -		SCALE: NONE SHEET 57 OF 58 SHEETS STA. TO STA.		ILLINOIS FED. AID PROJECT			

NOTES:

1. ALL NECESSARY REVISIONS TO THE WIRING SHOWN ON THIS SHEET SHALL BE MADE AT NO ADDITIONAL COST TO THE DEPARTMENT AND TO THE SATISFACTION OF THE ENGINEER.

PROPOSED ROADWAY LUMINAIRE, LED

PROPOSED UNDERPASS LUMINAIRE, LED

EXISTING ROADWAY LUMINAIRE, LED INSTALLED UNDER CONTRACT 70B99

EXISTING ROADWAY LUMINAIRE, HPS

JUNCTION BOX

GROUND ROD

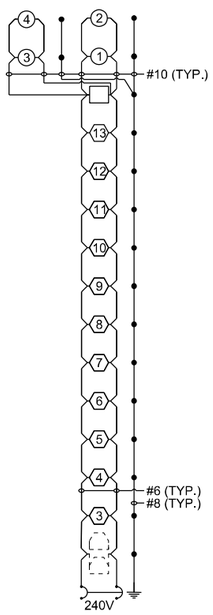

2 POLE 40 AMP BREAKER
CKT A

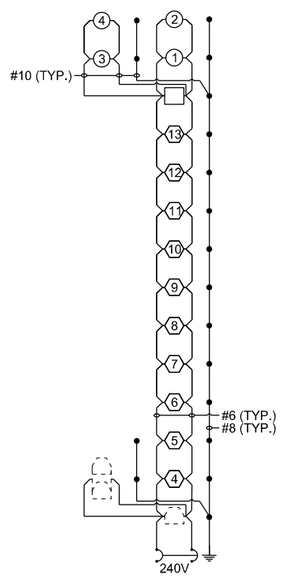

2 POLE 40 AMP BREAKER
CKT B

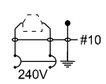

2 POLE 30 AMP BREAKER
CKT C

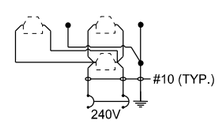

2 POLE 30 AMP BREAKER
CKT D

PROPOSED LIGHTING CONTROLLER "13"
BASE MOUNTED, 240V

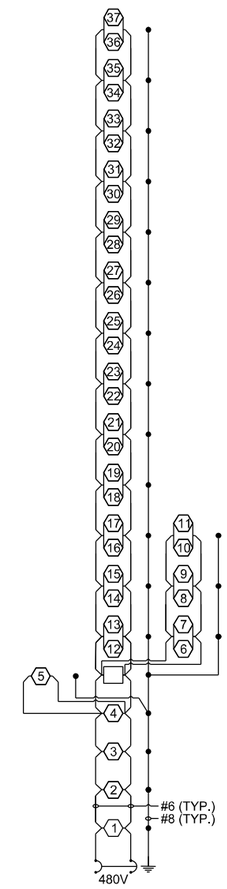

EXISTING BREAKER
CKT A

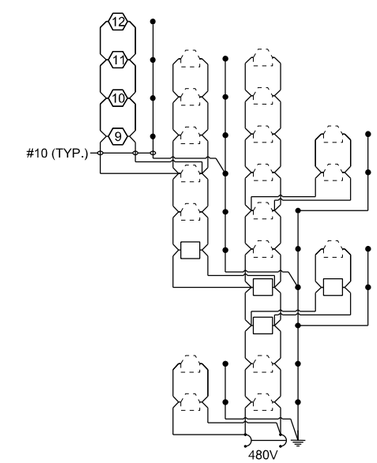

EXISTING BREAKER
CKT B

EXISTING BREAKER
CKT C
(WIRING NOT SHOWN)

EXISTING LIGHTING CONTROLLER "51"
BASE MOUNTED, 480V

L-58

FILE NAME = D570C01-lightdtl-4.dgn	USER NAME = bbarr	DESIGNED -	REVISED -	STATE OF ILLINOIS DEPARTMENT OF TRANSPORTATION	WIRING DIAGRAMS	F.A.I. RTE.	SECTION	COUNTY	TOTAL SHEETS / SHEET NO.
		DRAWN -	REVISED -			57	10-(33,34,5,14)R & (10-34)B	CHAMPAIGN	1182 / 882
	PLOT SCALE = 100.0000 ' / in.	CHECKED -	REVISED -					CONTRACT NO. 70C01	
	PLOT DATE = 2/27/2022	DATE -	REVISED -		SCALE: NONE / SHEET 58 OF 58 SHEETS / STA. / TO STA.		ILLINOIS	FED. AID PROJECT	

Bench Mark: Chisled "□" on top of the SW corner of the SW wingwall of the westbound bridge. Sta. 1059+99.73, 12.54' LT. Elev. 787.79.

Existing Structures: S.N. 010-0018(19) built in 1965 as F.A.I. 57 Section 10-34HB-1. In 1989, the superstructure, wingwalls, and bearings were replaced on both structures. Each structure is a composite (positive moment regions only) four-span continuous rolled W36 steel beam bridge with a reinforced concrete deck. The open stub abutments are supported on concrete piles with the four column reinforced concrete piers supported on spread footings. The existing structures are skewed 6°45'11" right forward Each structure is 261'-2" back-to-back abutments and varies 53'-3" to 57'-6½" out-to-out deck. Structure to be removed and replaced using stage construction.

No Salvage

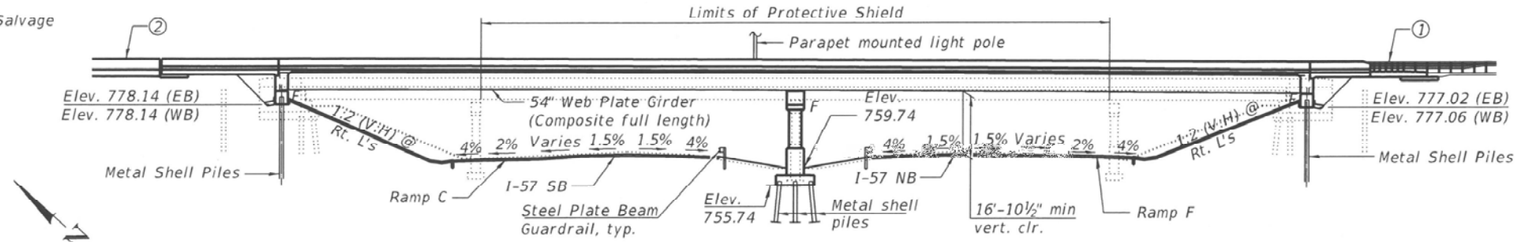

ELEVATION

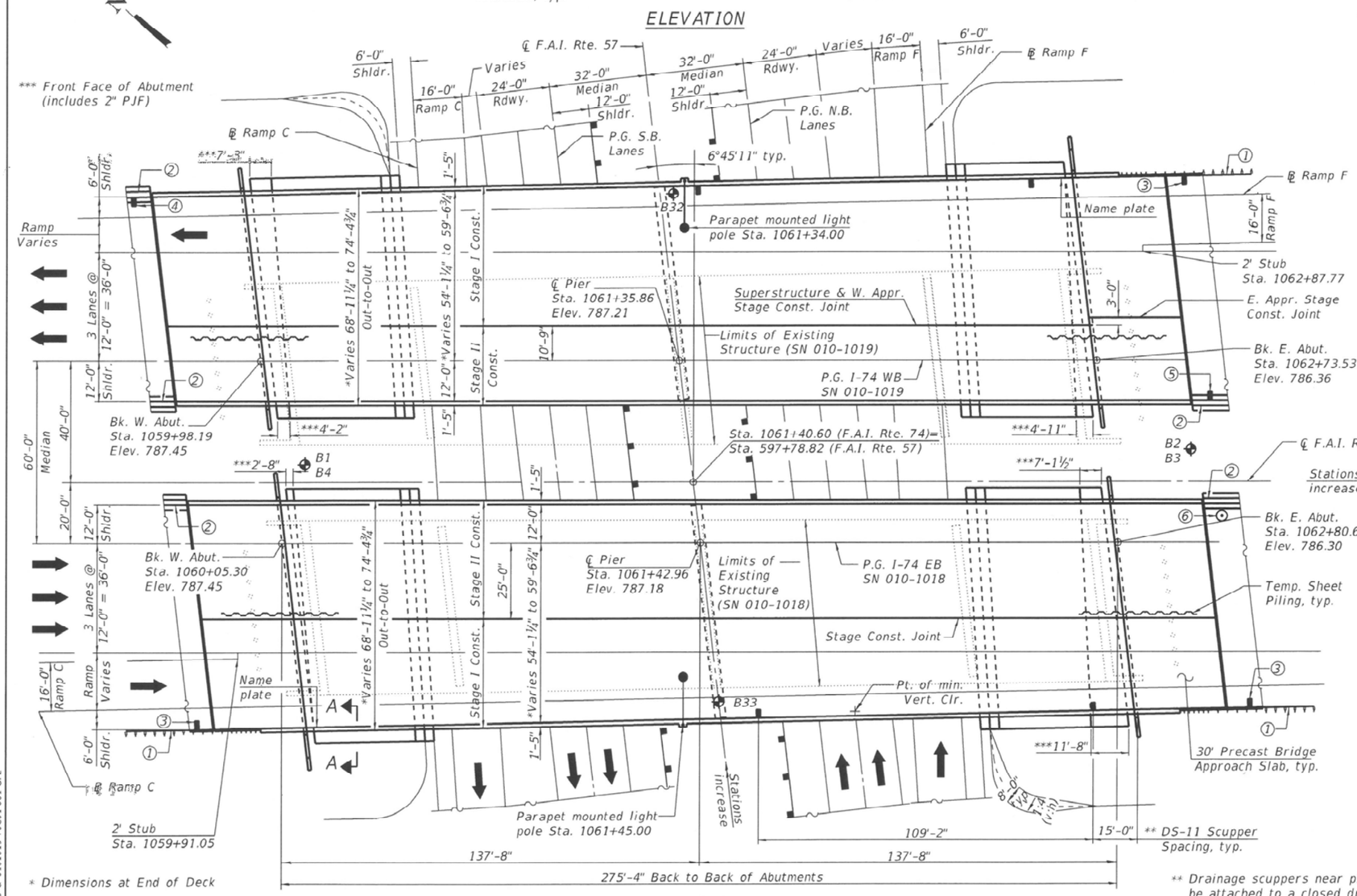

* Dimensions at End of Deck

PLAN

1. Traffic Barrier Terminal Type 6 (Std. 631031)
2. Concrete Barrier Single Face 44" (TL-4) (see Roadway Plans)
3. Shoulder Inlet with curb, Type E (Std. 610001)
4. Shoulder Inlet with 44" TL-4 Barrier Type E (Std. 610001)
5. Inlet A with Type 20 Frame & Grate
6. Manhole Type A - 4' Ø with Type 20 Frame & Grate

Notes:
Up to ¼ inch may be ground off the bridge deck and the bridge approach slabs.
The location of stage construction joint on the East Approach Slab is different than the stage construction joints on the Superstructure and West Approach Slab for the Westbound Structure (SN 010-1019).
See Sheet 2 of 79 for Section A-A.

DESIGN STRESSES

FIELD UNITS

f'c = 3,500 psi
f'c = 4,000 psi (superstructure concrete)
fy = 60,000 psi (Reinforcement)
****fy = 50,000 psi (M 270 Grade 50)
****fy = 36,000 psi (M 270 Grade 36)
****All structural steel shall be metallized unless otherwise noted.

LOADING HL-93

Allow 50#/sq. ft. for future wearing surface.

SEISMIC DATA

Seismic Performance Zone (SPZ) = 1
Design Spectral Acceleration at 1.0 sec. (S_{D1}) = 0.135 g
Design Spectral Acceleration at 0.2 sec. (S_{DS}) = 0.234g
Soil Site Class = D

DESIGN SPECIFICATIONS

2014 AASHTO LRFD Bridge Design Specifications, 7th Edition with 2016 Interims.

LICENSED STRUCTURAL ENGINEER
GERALD B. ROTHERHAM
081-005673
STATE OF ILLINOIS

01/21/2022
Exp. 11/30/2022

APPROVED
For Structural Adequacy Only
Engineer of Bridges & Structures

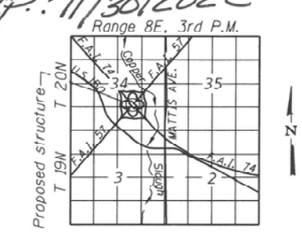

LOCATION SKETCH

** Drainage scuppers near pier shall be attached to a closed drainage system. See Sheet 35 of 79 for details.

GENERAL PLAN & ELEVATION
F.A.I. RTE. 74 OVER F.A.I. RTE. 57
SECTION 10-(33,34,5,14)R & (10-34)B
CHAMPAIGN COUNTY
STATION 1061+40.60
STRUCTURE NO. 010-1018 & 010-1019

BFW — BACON | FARMER | WORKMAN ENGINEERING & TESTING, INC.
411 NORTH COURT STREET, MARION, ILLINOIS 62959, PHONE: 618.997.9700

USER NAME =	DESIGNED - FAM	REVISED -	
	CHECKED - GBR	REVISED -	
PLOT SCALE =	DRAWN - FAM	REVISED -	
PLOT DATE = 1/21/2022	CHECKED - GBR	REVISED -	

STATE OF ILLINOIS
DEPARTMENT OF TRANSPORTATION

GENERAL PLAN AND ELEVATION
STRUCTURE NO. 010-1018 (EB) & 010-1019 (WB)
SHEET NO. 1 OF 79 SHEETS

F.A.I. RTE.	SECTION	COUNTY	TOTAL SHEETS	SHEET NO.
57	10-(33,34,5,14)R & (10-34)B	CHAMPAIGN	1182	883
		CONTRACT NO. 70C01		
		ILLINOIS	FED. AID PROJECT	

MODEL: Default
FILE NAME: 0101018 & 0101019-70C01-001-GPE
1/21/2022 9:10:49 AM

INDEX OF SHEETS

GENERAL NOTES

Fasteners shall be ASTM F3125, Grade A325 Type 1, hot dip galvanized bolts. Bolts 7/8 in. Ø, holes 15/16 in. Ø, unless otherwise noted.

Calculated weight of Structural Steel: AASHTO M 270 Gr. 50 = 1,770,600 lbs.
AASHTO M 270 Gr. 36 = 93,540 lbs.

No field welding is permitted except as specified in the contract documents.

Reinforcement bars designated (E) shall be epoxy coated.

Bearing seat surfaces shall be constructed or adjusted to the designated elevations within a tolerance of 1/8 inch (0.01 ft.). Adjustment shall be made either by grinding the surface or by shimming the bearings.

The existing structural steel coating contains lead. The Contractor shall take appropriate precautions to deal with the presence of lead on this project.

All structural steel shall be metallized unless otherwise noted. The metallizing shall meet a Class A AASHTO slip coefficient (0.30 or greater) for bolted connection faying surfaces. The metallized area shall be painted with System 1. See Special Provision for Metallizing of Structural Steel.

The embankment configuration shown shall be the minimum that must be placed and compacted prior to construction of abutments.

The maximum pay length of Protective Shield for each structure shall be from existing Pier 1 to existing Pier 3. The maximum pay width of Protective Shield for each structure shall be equal to the overall deck width of the existing bridge.

TOTAL BILL OF MATERIAL (BOTH STRUCTURES)

ITEM	UNIT	SUPER	SUB	TOTAL
Removal of Existing Structure No.1	Each			1
Removal of Existing Structure No.2	Each			1
Protective Shield	Sq. Yd.		2048	2048
Structure Excavation	Cu. Yd.		1032	1032
Concrete Structures	Cu. Yd.		621.9	621.9
Concrete Superstructures	Cu. Yd.	1409.8		1409.8
Bridge Deck Grooving (Longitudinal)	Sq. Yd.	3768		3768
Protective Coat	Sq. Yd.	5710		5710
Furnishing and Erecting Structural Steel	L. Sum	1		1
Stud Shear Connectors	Each	22000		22000
Reinforcement Bars, Epoxy Coated	Pound	380920	109290	490210
Bar Splicers	Each	2062	342	2404
Mechanical Splicers	Each	16	360	376
Slope wall 4"	Sq. Yd.		1743	1743
Furnishing of Metal Shell Piles 14"x0.312"	Foot		8796	8796
Driving Piles	Foot		8796	8796
Test Pile Metal Shells	Each		6	6
Pile Shoes	Each		130	130
Name Plates	Each	2		2
Preformed Joint Strip Seal	Foot	284		284
Anchor Bolts, 1"	Each	80		80
Anchor Bolts, 1¼"	Each	40		40
Temporary Sheet Piling	Sq. Ft.		1793	1793
Granular Backfill for Structures	Cu. Yd.		614	614
Geocomposite Wall Drain	Sq. Yd.		293	293
Concrete Wearing Surface, 5"	Sq. Yd.	943.6		943.6
Precast Bridge Approach Slab	Sq. Ft.	8380		8380
Drainage Scuppers, DS-11	Each		4	4
Diamond Grinding (Bridge Section)	Sq. Yd.	5214		5214
Pipe Underdrains for Structures, 4"	Foot		454	454
Temporary Support System	Each		3	3
Drainage System for Structures	L Sum	1		1

"A"- Berm width varies from:
4'-2" (South) to 7'-3" (North) at W. Abut. (SN 010-1019)
0'-2" (North) to 4'-11" (South) at E. Abut. (SN 010-1019)
0'-2" (South) to 2'-8" (North) at W. Abut. (SN 010-1018)
7'-1½" (North) to 11'-8" (South) at E. Abut. (SN 010-1018)
See Sheet 1 of 79 for Plan View and Berm widths.

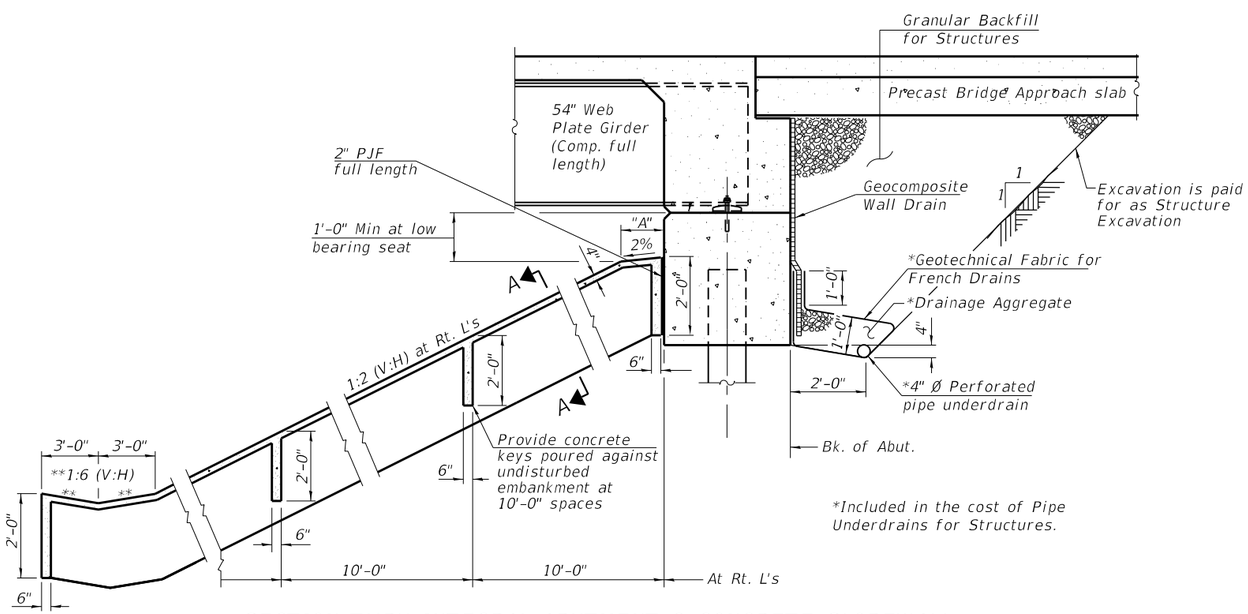

*Included in the cost of Pipe Underdrains for Structures.

SECTION THRU INTEGRAL ABUTMENT & CONCRETE SLOPEWALL

Notes:

All drainage system components shall extend to 2'-0" from the end of each wingwall except an outlet pipe shall extend until intersecting with the side slopes. The pipes shall drain into concrete headwalls. (See Article 601.05 of the Standard Specifications and Highway Standard 601101).

Slope wall shall be reinforced with welded wire fabric, 6"x 6"-W4.0 x W4.0, weighing 58 lbs. per 100 sq. ft.

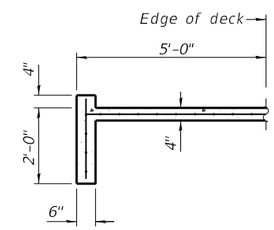

SECTION A-A

STATION 1061+40.60
BUILT 20__ BY
STATE OF ILLINOIS
F.A.I. RTE. 74 SEC. (10-34-1)HBK
LOADING HL-93
STR. NO. 010-1018

NAME PLATE

See Std. 515001

STATION 1061+40.60
BUILT 20__ BY
STATE OF ILLINOIS
F.A.I. RTE. 74 SEC. (10-34-1)HBK
LOADING HL-93
STR. NO. 010-1019

NAME PLATE

See Std. 515001

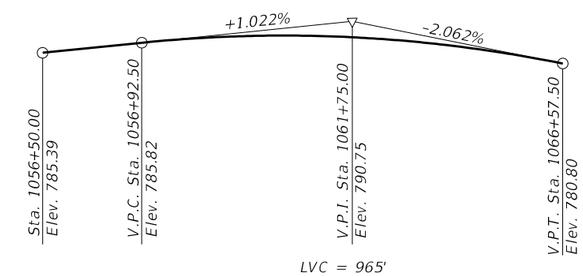

PROFILE GRADE F.A.I. RTE. 74

(The profile grade shows the final elevations after grinding)

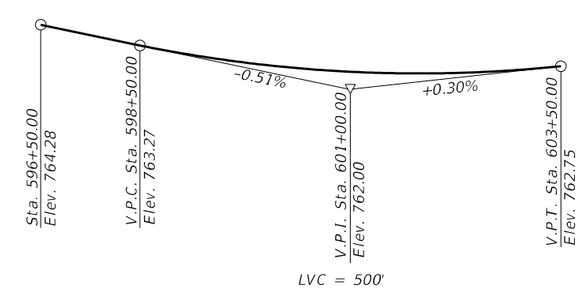

PROFILE GRADE F.A.I. RTE. 57

- Indicates Removal of Existing Structure

Notes:
See sheet 7 of 79 for Temporary Concrete Barrier details. See Roadway Plans for Quantity.
See sheet 4 of 79 for Temporary Sheet Piling details.
For Pier Staging details, see sheet 5 of 79.
The location of stage construction joint on the East Approach Slab is different than the stage construction joints on the Superstructure and West Approach Slab for Westbound structure (SN 010-1019)
The Stage Removal Line on Pier 3 of Westbound structure (SN 010-1019) is different than the stage removal lines on the Superstructure and other Piers. See Substructure Layout on Sheet 6 of 79 for details.

* At end of deck
** Perpendicular to exterior girder
*** To be removed by others. See lighting and electrical plans for removal of lighting and electrical cable.

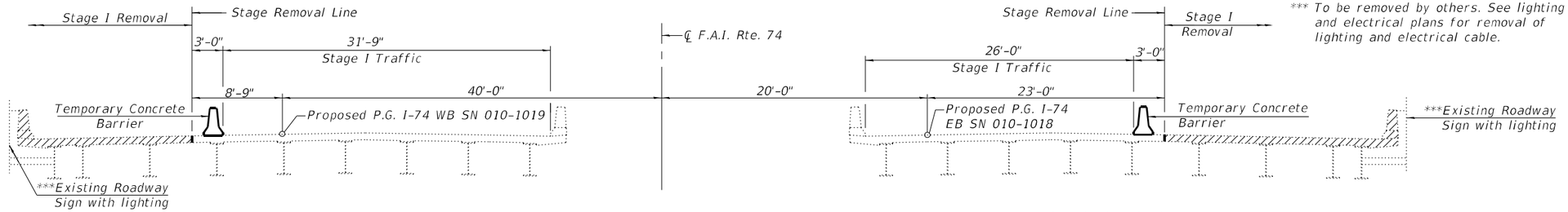

SN 010-1019 | STAGE I REMOVAL & STAGE I TRAFFIC (Looking East) | SN 010-1018

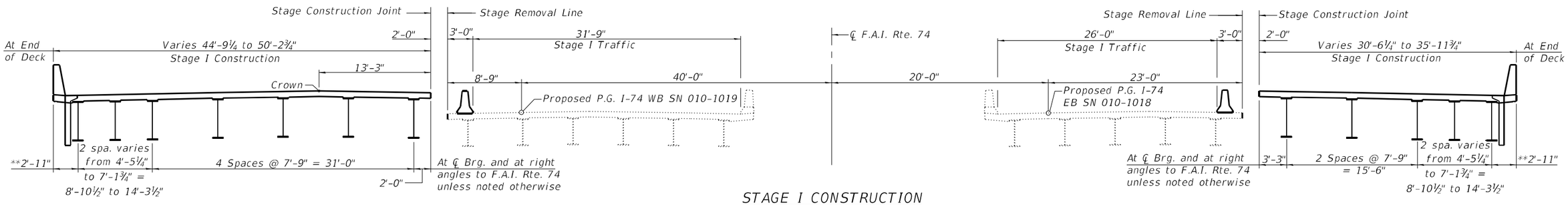

STAGE I CONSTRUCTION
(Looking East)

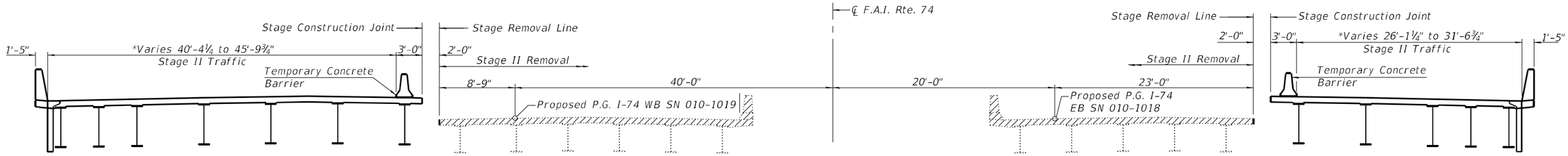

STAGE II REMOVAL & STAGE II TRAFFIC
(Looking East)

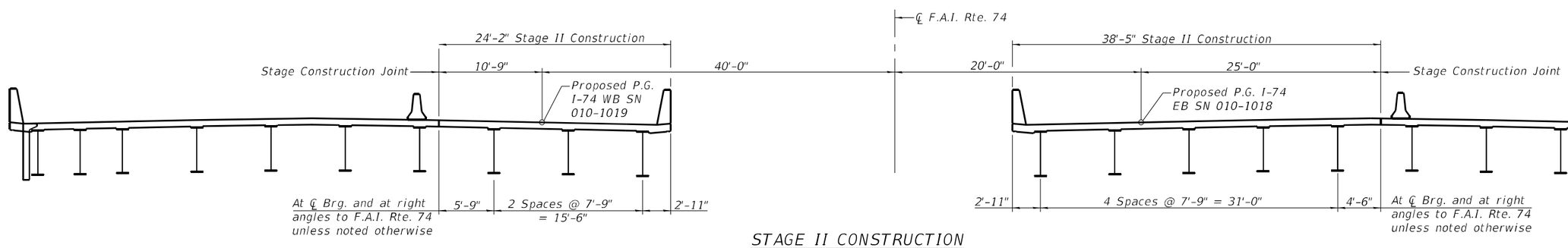

STAGE II CONSTRUCTION
(Looking East)

MODEL: Default
FILE NAME: 0101018 & 0101019-70C01-003-Stage Construction Details

BACON | FARMER | WORKMAN
ENGINEERING & TESTING, INC.
403 NORTH COURT STREET
MARION, IL (ZIP 62959)
PHONE - 618.997.9190

USER NAME =	DESIGNED - FAM	REVISED -	
	CHECKED - GBR	REVISED -	
PLOT SCALE =	DRAWN - FAM	REVISED -	
PLOT DATE = 1/21/2022	CHECKED - GBR	REVISED -	

STATE OF ILLINOIS
DEPARTMENT OF TRANSPORTATION

STAGE CONSTRUCTION DETAILS
STRUCTURE NO. 010-1018 (EB) & 010-1019 (WB)

SHEET NO. 3 OF 79 SHEETS

F.A.I. RTE.	SECTION	COUNTY	TOTAL SHEETS	SHEET NO.
57	10-(33,34,5,14)R & (10-34)B	CHAMPAIGN	1182	885
		CONTRACT NO. 70C01		
	ILLINOIS	FED. AID PROJECT		

1/21/2022 9:12:02 AM

Notes:

The Contractor shall connect the first sheet to the existing abutment wall to ensure stability of sheets driven to the top of the existing footing. This connection shall be reviewed and accepted by the Engineer and included in the cost for Temporary Sheet Piling.

If the Contractor chooses to alter the temporary cantilevered sheet piling design requirements shown on the plans, a design submittal including plan details and calculations will be required for review and acceptance by the Engineer.

The location of stage construction joint on the East Approach Slab is different than the stage construction joints on the Superstructure and West Approach Slab for Westbound structure (SN 010-1019)

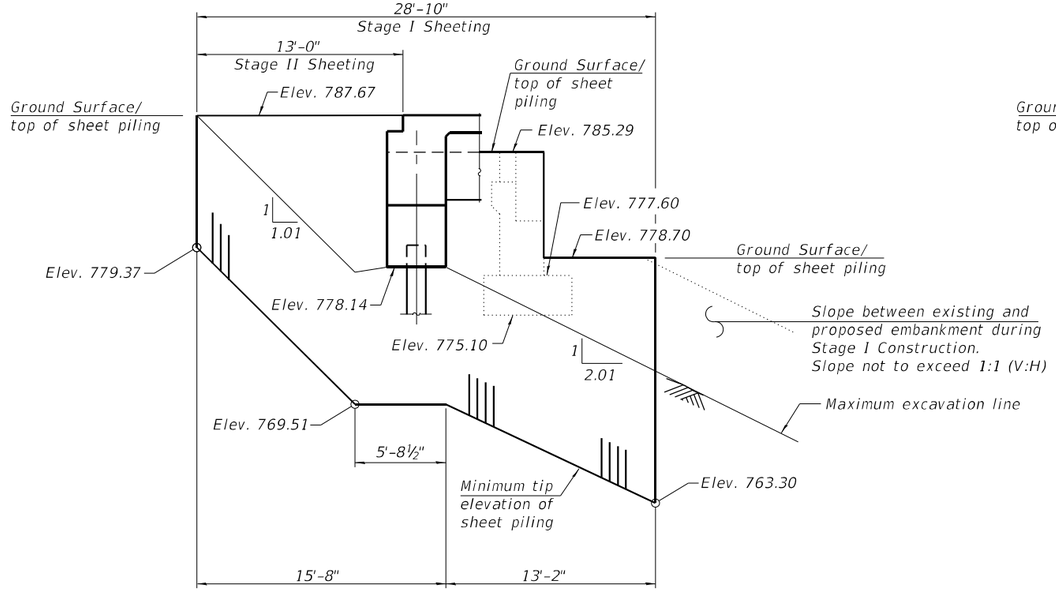

SN 010-1019

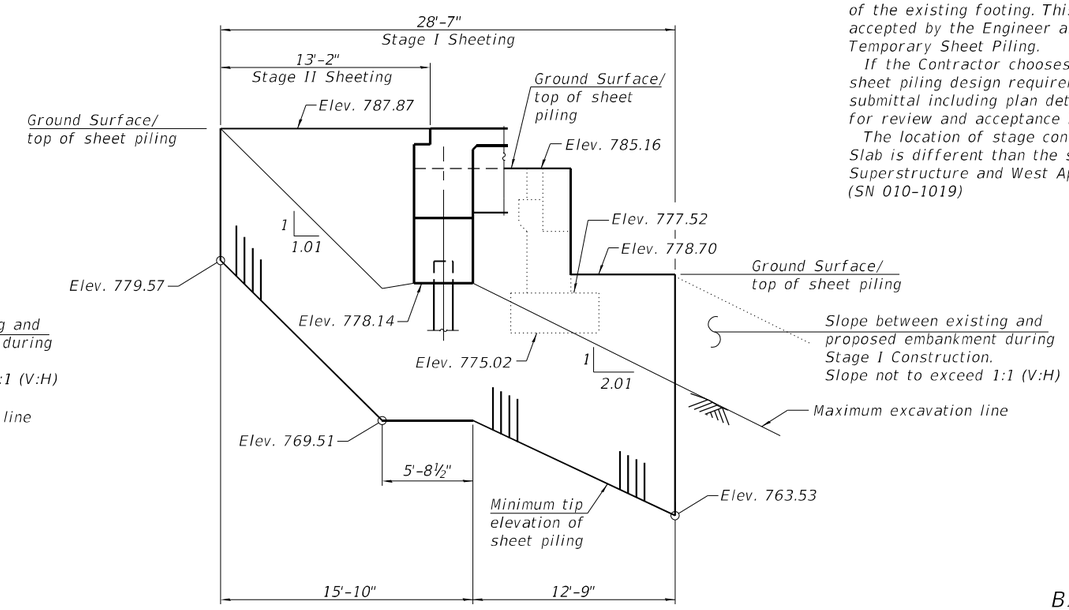

SN 010-1018

TEMPORARY SHEET PILING AT WEST ABUTMENT

(Minimum Section Modulus= 9.2 in^3/ft)

BILL OF MATERIAL (BOTH STRUCTURES)

Item	Unit	Total
Temporary Sheet Piling	Sq. Ft.	1793

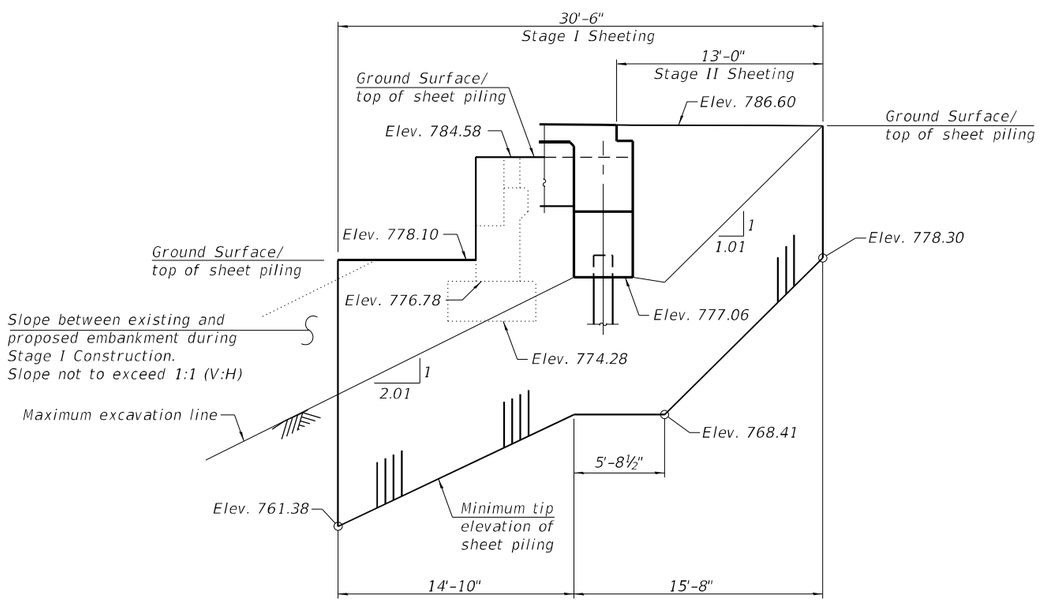

SN 010-1019

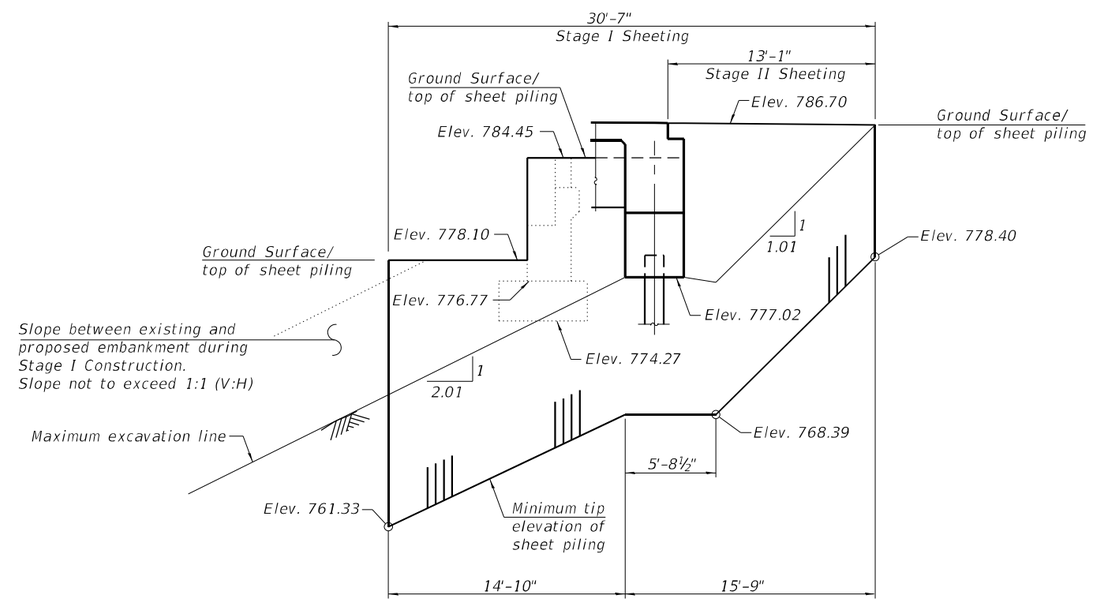

SN 010-1018

TEMPORARY SHEET PILING AT EAST ABUTMENT

(Minimum Section Modulus= 9.2 in^3/ft)

MODEL: Default
FILE NAME: 0101018 & 0101019-70C01-004-Stage Construction Details

BACON | FARMER | WORKMAN
ENGINEERING & TESTING, INC.
403 NORTH COURT STREET
MARION, IL (ROB) 62959
PHONE - 618.997.9190

USER NAME =	DESIGNED - FAM	REVISED -	
	CHECKED - JGY	REVISED -	
PLOT SCALE =	DRAWN - FAM	REVISED -	
PLOT DATE = 1/21/2022	CHECKED - JGY	REVISED -	

STATE OF ILLINOIS
DEPARTMENT OF TRANSPORTATION

STAGE CONSTRUCTION DETAILS
STRUCTURE NO. 010-1018 (EB) & 010-1019 (WB)

SHEET NO. 4 OF 79 SHEETS

F.A.I. RTE.	SECTION	COUNTY	TOTAL SHEETS	SHEET NO.
57	10-(33,34,5,14)R & (10-34)B	CHAMPAIGN	1182	886
		CONTRACT NO. 70C01		
		ILLINOIS	FED. AID PROJECT	

1/21/2022 9:12:36 AM

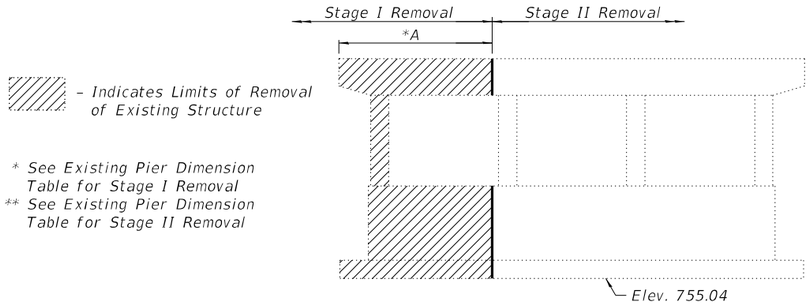

SN 010-1019

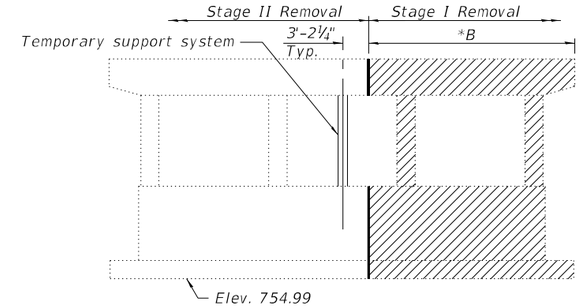

SN 010-1018

STAGE I REMOVAL

(Looking East)
(Horizontal Dimensions shown along ℄ of Pier)

Notes:

Partial removal of existing Pier 2 is shown in all sections. Existing Piers 1 and 3 are similar. A Temporary Support System will be required to support each existing pier cap as shown on the Eastbound Structure (SN 010-1018) during Stage I Construction. The temporary support system must be in place before the piers are saw cut. Prior to Stage I removal, piers and abutments shall be saw cut full depth at substructure stage removal line. See Special Provision.

The Stage Removal Line on Pier 3 of the Westbound structure (SN 010-1019) is different than the stage removal lines on the Superstructure and other Piers. See Substructure Layout on Sheet 6 of 79 for details.

The location of stage construction joint on the East Approach Slab is different than the stage construction joints on the Superstructure and West Approach Slab for Westbound structure (SN 010-1019)

The temporary support system shall be capable of supporting a design service vertical Dead Load of 80 kips and a vertical Live Load of 87 kips.

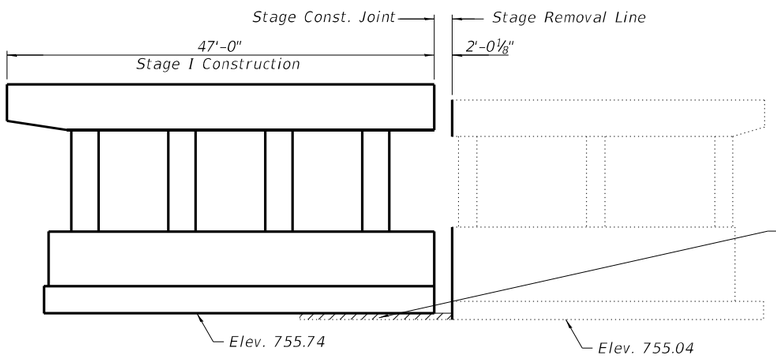

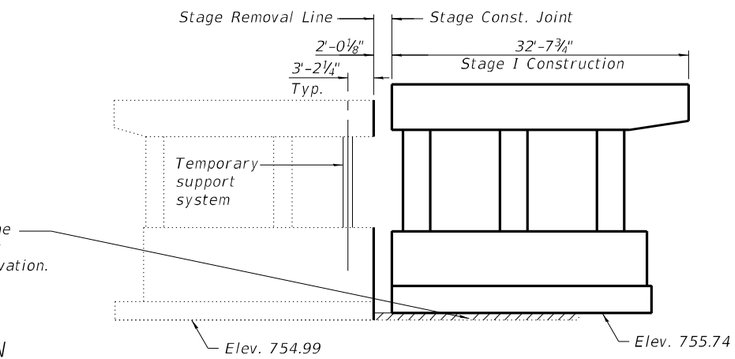

STAGE I CONSTRUCTION

(Looking East)
(Horizontal Dimensions shown along ℄ of Pier)

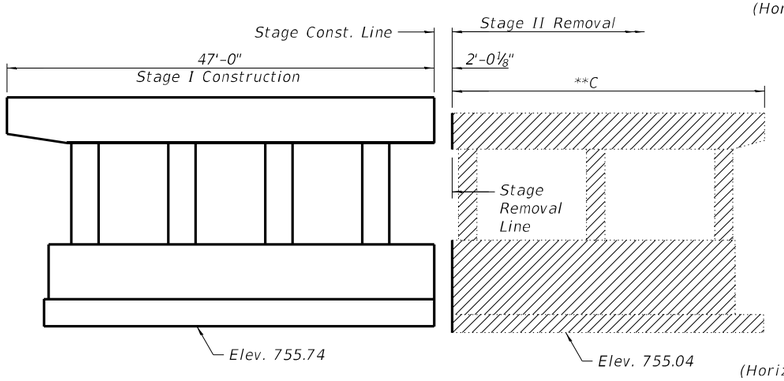

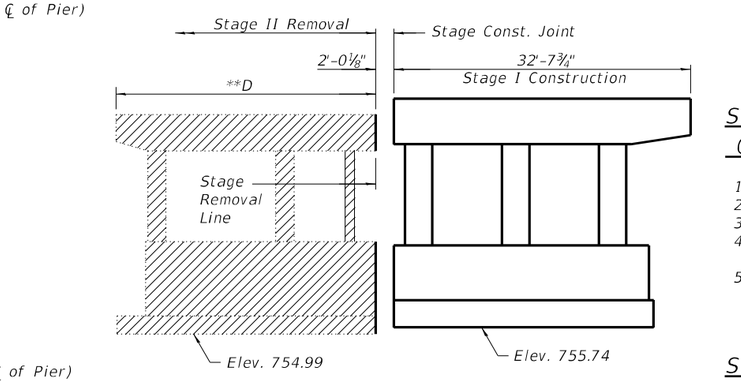

STAGE II REMOVAL

(Looking East)
(Horizontal Dimensions shown along ℄ of Pier)

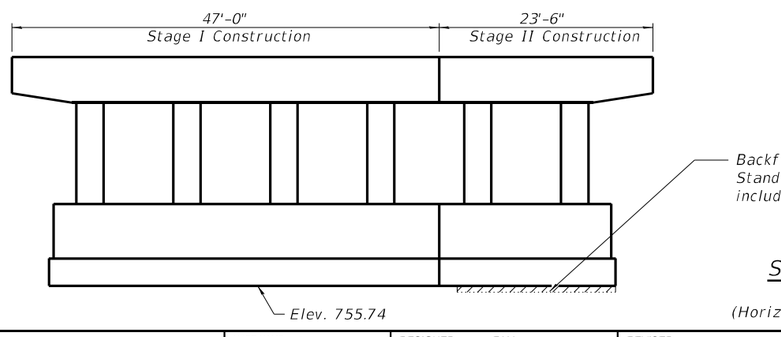

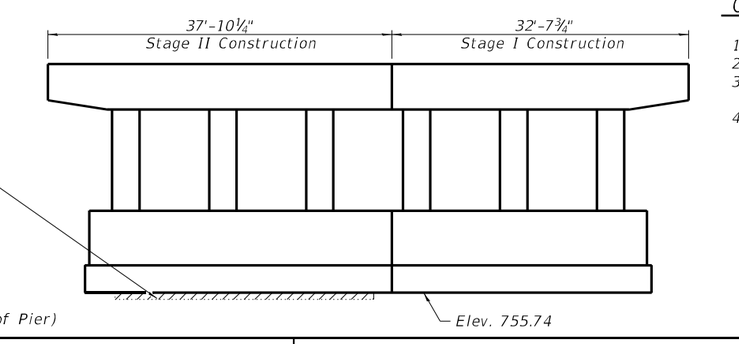

STAGE II CONSTRUCTION

(Looking East)
(Horizontal Dimensions shown along ℄ of Pier)

EXISTING PIER DIMENSION TABLE FOR STAGE I REMOVAL

Pier	SN 010-1019 (A)	SN 010-1018 (B)
Pier 1	±15'-6½"	±24'-2"
Pier 2	±16'-11⅛"	±22'-8⅝"
Pier 3	±17'-4½"	±21'-4"

EXISTING PIER DIMENSION TABLE FOR STAGE II REMOVAL

Pier	SN 010-1019 (C)	SN 010-1018 (D)
Pier 1	±34'-5½"	±28'-7"
Pier 2	±34'-3⅞"	±28'-6⅜"
Pier 3	±35'-4½"	±28'-8"

STAGE CONSTRUCTION SEQUENCE FOR PIER ON EASTBOUND STRUCTURE (SN 010-1018)

1. Install Temporary Support System at each existing pier.
2. Complete Stage I Removal.
3. Backfill to Elevation 755.74.
4. Drive piles beginning at Elevation 755.74 and complete Stage I Pier Construction.
5. Repeat 2 thru 4 for Stage II

STAGE CONSTRUCTION SEQUENCE FOR PIER ON WESTBOUND STRUCTURE (SN 010-1019)

1. Complete Stage I Removal.
2. Backfill to Elevation 755.74.
3. Drive piles beginning at Elevation 755.74 and complete Stage I Pier Construction.
4. Repeat 2 thru 3 for Stage II

BILL OF MATERIAL (STRUCTURE 010-1018 ONLY)

Item	Unit	Total
Temporary Support System	Each	3

MODEL: Default
FILE NAME: 0101018 & 0101019-70C01-005-Stage Construction Details

BACON | FARMER | WORKMAN
ENGINEERING & TESTING, INC.
433 NORTH COURT STREET
MARION, IL (62959) 61969
PHONE - 618.997.9190

USER NAME =	DESIGNED - FAM	REVISED -	
	CHECKED - JGY	REVISED -	
PLOT SCALE =	DRAWN - FAM	REVISED -	
PLOT DATE = 1/21/2022	CHECKED - JGY	REVISED -	

STATE OF ILLINOIS
DEPARTMENT OF TRANSPORTATION

STAGE CONSTRUCTION DETAILS
STRUCTURE NO. 010-1018 (EB) & 010-1019 (WB)

SHEET NO. 5 OF 79 SHEETS

F.A.I. RTE.	SECTION	COUNTY	TOTAL SHEETS	SHEET NO.
57	10-(33,34,5,14)R & (10-34)B	CHAMPAIGN	1182	887
		CONTRACT NO. 70C01		
	ILLINOIS	FED. AID PROJECT		

1/21/2022 9:13:03 AM

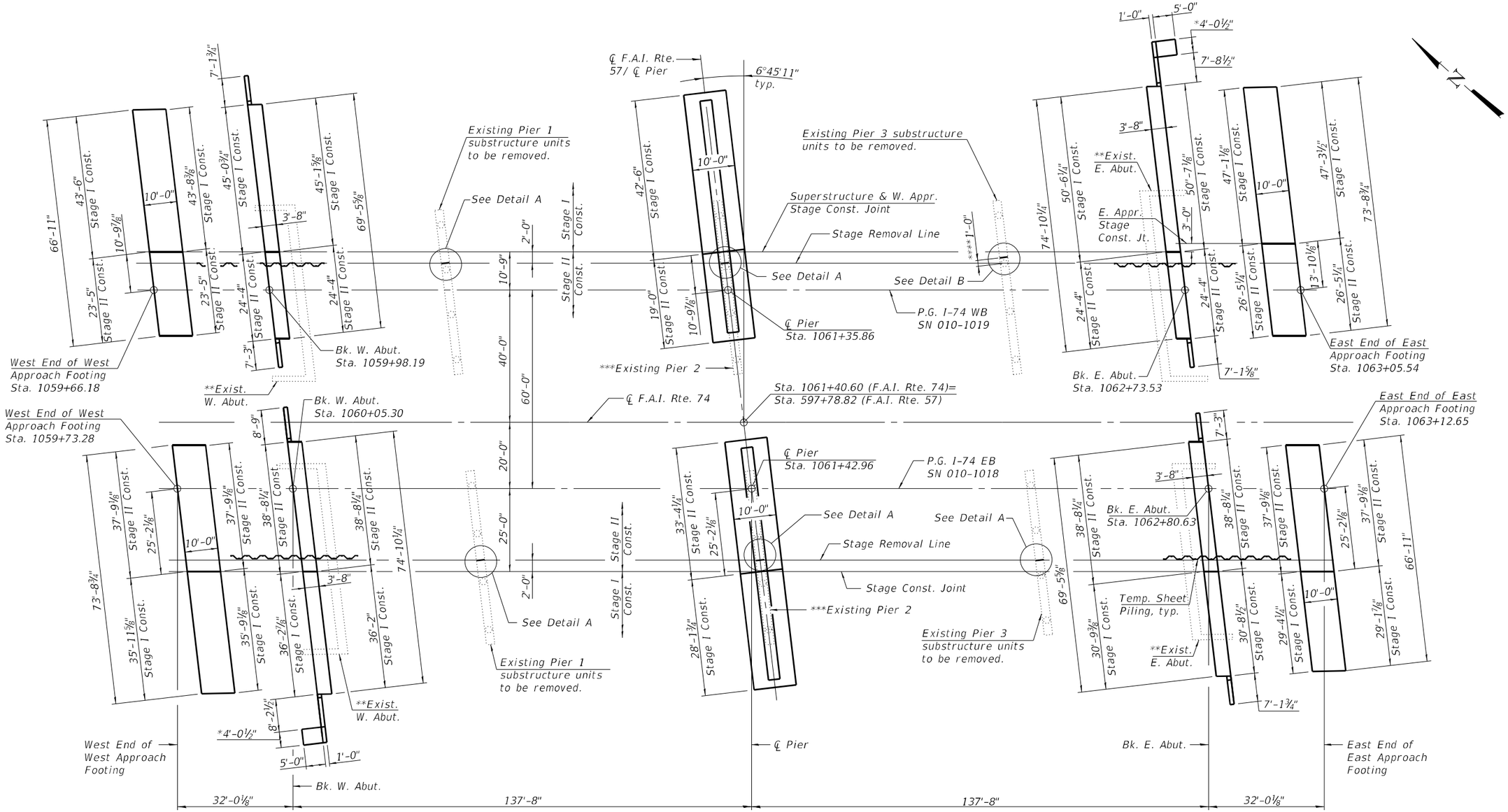

SUBSTRUCTURE LAYOUT

* Include ½" Preformed Joint Filler. (See Sheet 68 of 79 details)
** Existing Abutments substructure units to be removed. (See sheet 4 of 79 for Temporary Sheet Piling details.)
*** Existing Pier 2 substructure units shall be removed and replaced as per Stage constructction sequence outlined on sheet 5 of 79.
**** Move Stage Removal Line for Pier 3 on the Westbound structure (SN 010-1019) by 1'-0" to miss the existing column. See Detail B.

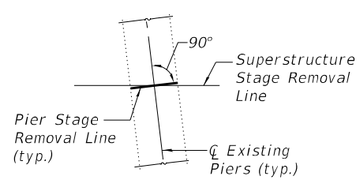

DETAIL A

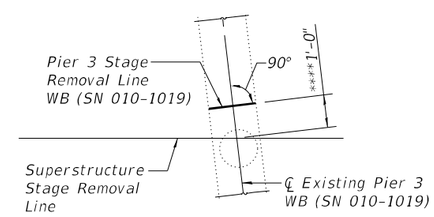

DETAIL B

Notes:
The location of stage construction joint on the East Approach Slab is different than the stage construction joints on the Superstructure and West Approach Slab for Westbound Structure (SN 010-1019).
See sheet 4 of 79 for Abutment Staging details.
See sheet 5 of 79 for Pier Staging details and design service vertical dead load for temporary support system for existing piers on SN 010-1018.
The Stage Removal Line on Pier 3 of Westbound structure (SN 010-1019) is different than the stage removal lines on the Superstructure and other Piers.

BFW — BACON | FARMER | WORKMAN ENGINEERING & TESTING, INC.
403 NORTH COURT STREET, MARION, ILLINOIS 62959, PHONE: 618.997.3190

USER NAME =	DESIGNED - FAM	REVISED -	
	CHECKED - GBR	REVISED -	
PLOT SCALE =	DRAWN - FAM	REVISED -	
PLOT DATE = 1/21/2022	CHECKED - GBR	REVISED -	

STATE OF ILLINOIS
DEPARTMENT OF TRANSPORTATION

SUBSTRUCTURE LAYOUT
STRUCTURE NO. 010-1018 (EB) & 010-1019 (WB)
SHEET NO. 6 OF 79 SHEETS

F.A.I. RTE.	SECTION	COUNTY	TOTAL SHEETS	SHEET NO.
57	10-(33,34,5,14)R & (10-34)B	CHAMPAIGN	1182	888
		CONTRACT NO. 70C01		
		ILLINOIS	FED. AID PROJECT	

MODEL: Default
FILE NAME: 0101018 & 0101019-70C01-006-Substructure Layout
1/21/2022 9:13:28 AM

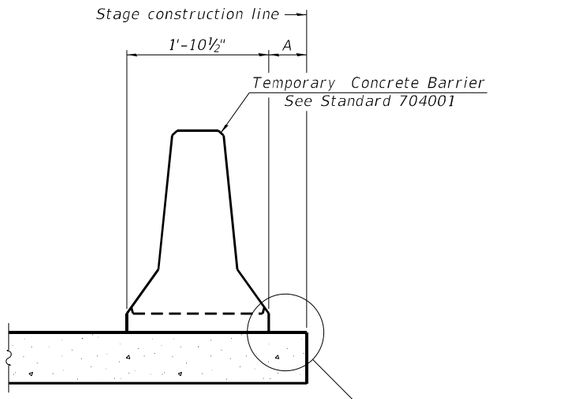

When "A" is 3'-1" or less, the temporary concrete barrier shall be restrained to the new slab according to Detail I, II or III. No restraint is required when "A" is greater than 3'-1".

NEW SLAB OR NEW DECK BEAM

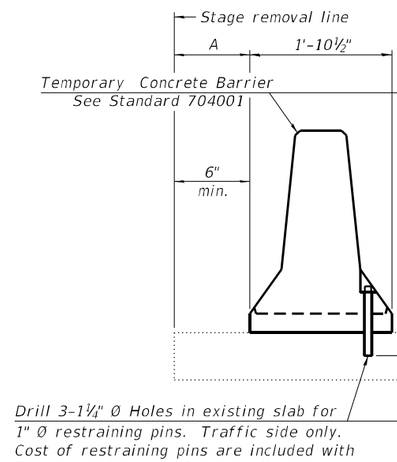

Drill 3-1¼" Ø Holes in existing slab for 1" Ø restraining pins. Traffic side only. Cost of restraining pins are included with Temporary Concrete Barrier. No restraint is required when "A" is greater than 3'-1".

EXISTING SLAB

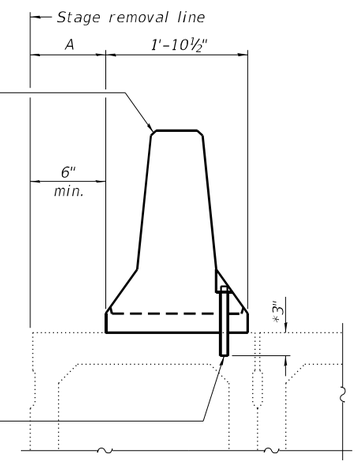

* When hot-mix asphalt wearng surface is present, embedment shall be 3" plus the wearing surface depth.

EXISTING DECK BEAM

SECTIONS THRU SLAB OR DECK BEAM

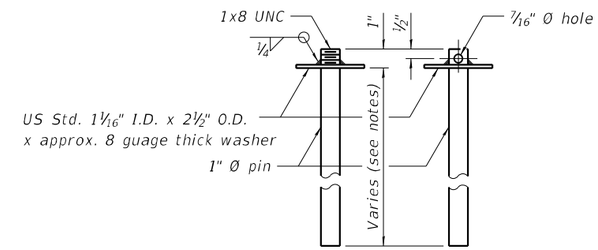

RESTRAINING PIN

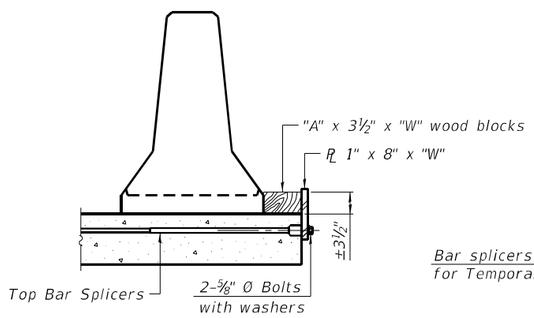

DETAIL I

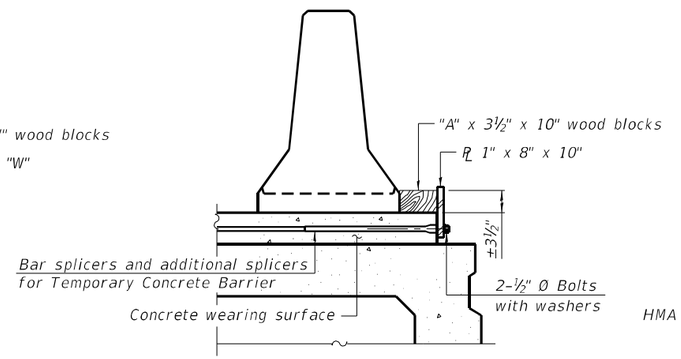

DETAIL II

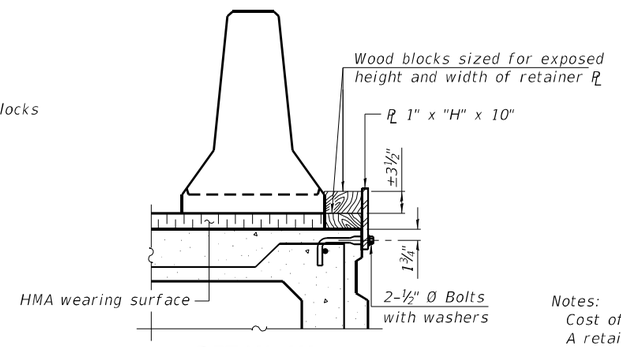

DETAIL III

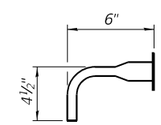

BAR SPLICER FOR #4 BAR - DETAIL III

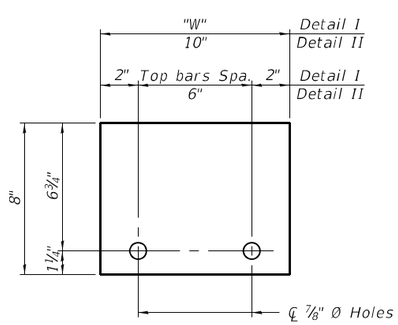

STEEL RETAINER PL 1" x 8" x "W"

(Detail I and II)

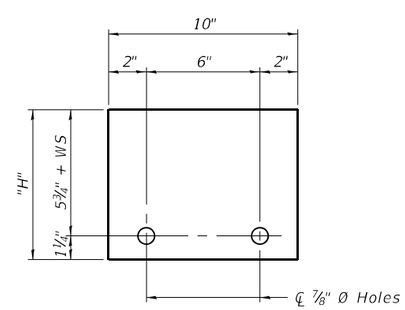

STEEL RETAINER PL 1" x "H" x 10"

(Detail III)

Notes:

Cost of retainer assembly is included with Temporary Concrete Barrier.

A retainer assembly shall be located at the approximate ℄ of each temporary concrete barrier.

The retainer plate shall not be removed until the concrete on the adjacent stage is ready to be poured. For Detail III applications the retainer plate shall not be removed until just prior to placing the adjacent beam.

When the 'A' dimension is less than 1½", the wood block shall be omitted and the barrier shall be placed in direct contact with the steel retainer plate. For deck beam applications the minimum required 'A' distance is 6" to accommodate the shear key clamping device.

Detail I - Installation for a new bridge deck or bridge slab.

Detail II - Installation for a new deck beam with an initial concrete wearing surface. Additional bar splicers shall be provided at 6'-0" centers and paired with the bar splicers of the concrete wearing surface reinforcement to accommodate the installation of the retainer assemblies. The cost of the additional bar splicers is included with the concrete wearing surface.

Detail III - Installation for a new deck beam with no initial wearing surface or with an initial hot-mix asphalt (HMA) wearing surface present. The deck beam directly beneath the temporary concrete barrier shall be fabricated with bar splicer inserts in the side of the beam, as detailed, to accommodate the installation of the retainer assemblies. A pair of bar splicers, 6" apart, shall be placed at 6'-0" centers along the length of the beam. The cost of the bar splicers is included with the deck beam.

R-27

2-17-2017

BACON | FARMER | WORKMAN
ENGINEERING & TESTING, INC.
403 NORTH COURT STREET
MARION, ILLINOIS 62959
PHONE - 618/997-2196

USER NAME =	DESIGNED - FAM	REVISED -	
	CHECKED - GBR	REVISED -	
PLOT SCALE =	DRAWN - FAM	REVISED -	
PLOT DATE = 1/21/2022	CHECKED - GBR	REVISED -	

STATE OF ILLINOIS
DEPARTMENT OF TRANSPORTATION

TEMPORARY CONCRETE BARRIER FOR STAGE CONSTRUCTION
STRUCTURE NO. 010-1018 (EB) & 010-1019 (WB)

SHEET NO. 7 OF 79 SHEETS

F.A.I. RTE.	SECTION	COUNTY	TOTAL SHEETS	SHEET NO.
57	10-(33,34,5,14)R & (10-34)B	CHAMPAIGN	1182	889
		CONTRACT NO. 70C01		
		ILLINOIS	FED. AID PROJECT	

MODEL: Default
FILE NAME: 0101018 & 0101019-70C01-007-Temporary Concrete Barrier for Stage Construction

1/21/2022 9:13:52 AM

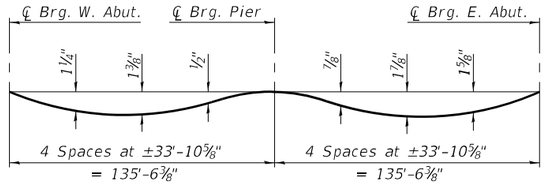

GIRDER 1

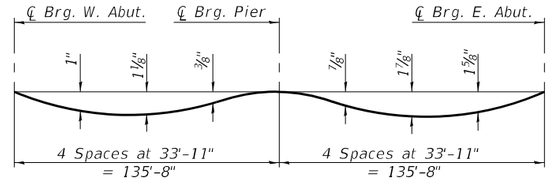

GIRDER 2

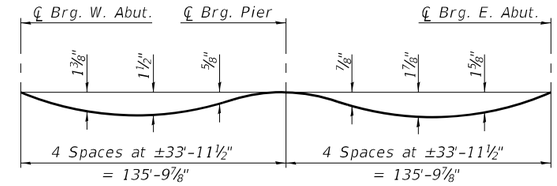

GIRDER 3

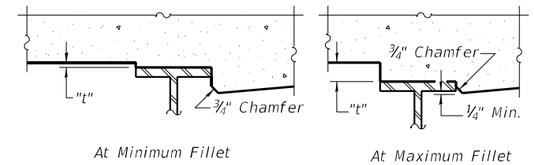

To determine "t": After all structural steel has been erected, elevations of the top flanges of the girders shall be taken at intervals shown below. These elevations subtracted from the "Theoretical Grade Elevations Adjusted for Dead Load Deflection and Grinding" shown on Sheets 9 thru 13 of 79, minus the initial slab thickness prior to grinding, equals the fillet heights "t" above top flange of girders.

The slab is to be ground after curing to achieve smoothness, but the slab is not to be ground to elevations below the "Theoretical Grade Elevations" shown on Sheets 9 thru 13 of 79. For grinding the deck, see Special Provisions.

FILLET HEIGHTS

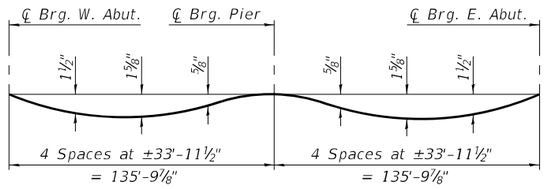

GIRDER 4 – 7

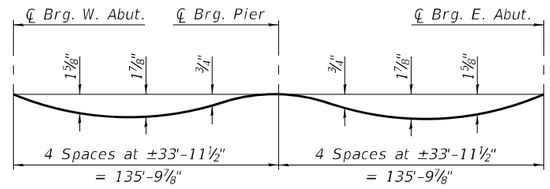

GIRDER 8 – 10

DEAD LOAD DEFLECTION DIAGRAM

(Includes weight of concrete only).

Notes:

The above deflections are not to be used in the field if the engineer is working from the grade elevations adjusted for dead load deflections and grinding as shown on Sheets 9 thru 13 of 79.

The location of stage construction joint on the East Approach Slab is different than the joints on the Superstructure and West Approach Slab.

Stations and offsets are referenced from ℄ F.A.I. Rte. 74 and P.G. SN 010-1019, respectively.

*At ℄ Brg. and perpendicular to F.A.I. Rte. 74
**Ramp F and Girder 1 are parallel with a perpendicular distance of 4'-6"

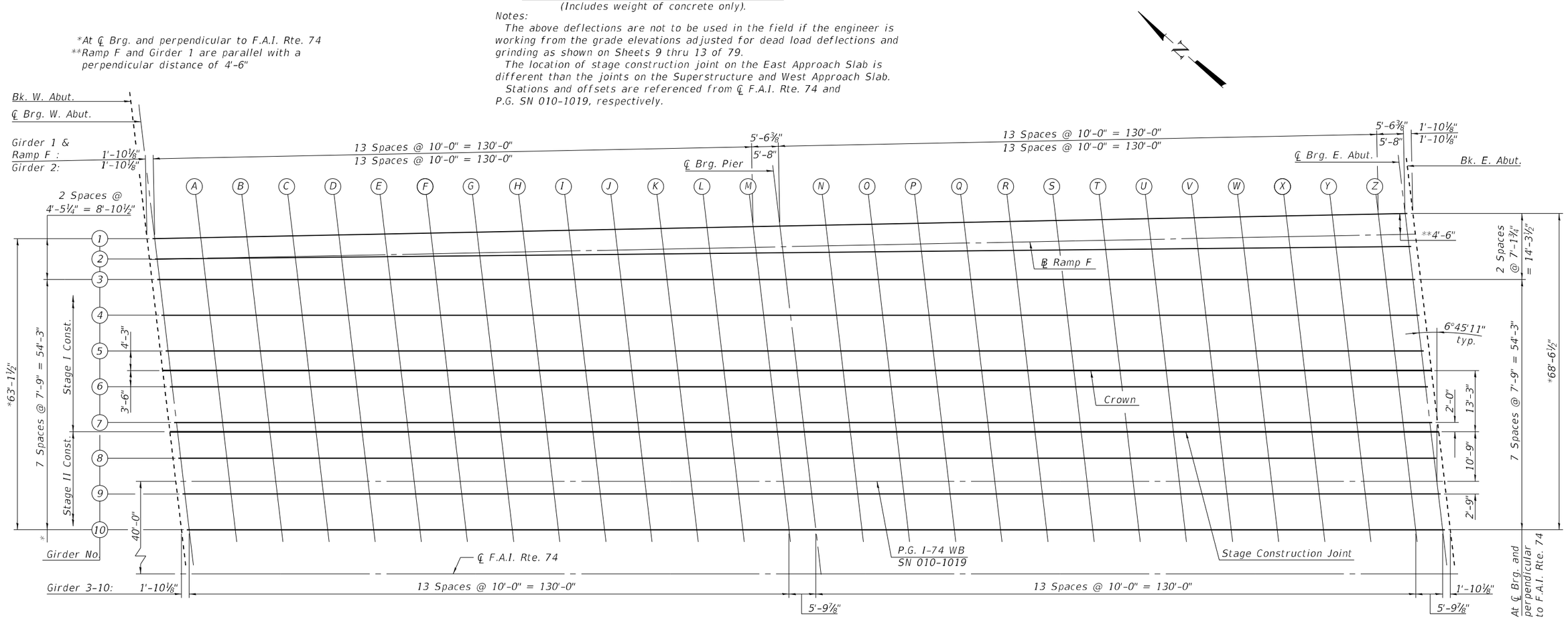

PLAN

MODEL: Default
FILE NAME: 0101018 & 0101019-70C01-008-TOS Elevation SN 010-1019 (WB)

1/21/2022 9:14:15 AM

BACON | FARMER | WORKMAN
ENGINEERING & TESTING, INC.
403 NORTH COURT STREET
MARION, ILLINOIS 62959
PHONE - 618.997.3190

USER NAME =	DESIGNED - FAM	REVISED -	
	CHECKED - GBR	REVISED -	
PLOT SCALE =	DRAWN - FAM	REVISED -	
PLOT DATE = 1/21/2022	CHECKED - GBR	REVISED -	

STATE OF ILLINOIS
DEPARTMENT OF TRANSPORTATION

TOP OF SLAB ELEVATIONS
STRUCTURE NO. 010-1019 (WB)

SHEET NO. 8 OF 79 SHEETS

F.A.I. RTE.	SECTION	COUNTY	TOTAL SHEETS	SHEET NO.
57	10-(33,34,5,14)R & (10-34)B	CHAMPAIGN	1182	890
		CONTRACT NO. 70C01		
		ILLINOIS	FED. AID PROJECT	

GIRDER 1

Location	Station	Offset	Theoretical Grade Elevations	Theoretical Grade Elevations Adjusted For Dead Load Deflection and Grinding
Bk. W Abut.	1059+91.96	-52.59	787.35	787.37
℄ Brg. W. Abut.	1059+93.81	-52.62	787.35	787.37
A	1060+03.80	-52.82	787.35	787.41
B	1060+13.80	-53.02	787.35	787.44
C	1060+23.80	-53.22	787.34	787.46
D	1060+33.80	-53.42	787.33	787.47
E	1060+43.80	-53.62	787.32	787.47
F	1060+53.79	-53.82	787.30	787.45
G	1060+63.79	-54.02	787.29	787.42
H	1060+73.79	-54.22	787.26	787.38
I	1060+83.79	-54.42	787.24	787.33
J	1060+93.79	-54.62	787.21	787.28
K	1061+03.78	-54.82	787.18	787.23
L	1061+13.78	-55.02	787.14	787.17
M	1061+23.78	-55.22	787.10	787.13
℄ Brg. Pier	1061+29.31	-55.33	787.08	787.10
N	1061+39.30	-55.53	787.04	787.07
O	1061+49.30	-55.73	786.99	787.04
P	1061+59.30	-55.93	786.94	787.02
Q	1061+69.30	-56.13	786.89	787.00
R	1061+79.30	-56.33	786.83	786.97
S	1061+89.29	-56.53	786.77	786.93
T	1061+99.29	-56.73	786.71	786.89
U	1062+09.29	-56.93	786.65	786.83
V	1062+19.29	-57.13	786.58	786.76
W	1062+29.29	-57.33	786.51	786.67
X	1062+39.28	-57.53	786.43	786.56
Y	1062+49.28	-57.73	786.35	786.45
Z	1062+59.28	-57.93	786.27	786.32
℄ Brg. E. Abut.	1062+64.81	-58.04	786.22	786.25
Bk. E. Abut.	1062+66.65	-58.08	786.21	786.23

RAMP F

Location	Station	Offset	Theoretical Grade Elevations	Theoretical Grade Elevations Adjusted For Dead Load Deflection and Grinding
Bk. W Abut.	1059+92.50	-48.10	787.44	787.47
℄ Brg. W. Abut.	1059+94.34	-48.13	787.45	787.47
A	1060+04.34	-48.33	787.44	787.50
B	1060+14.33	-48.53	787.44	787.52
C	1060+24.33	-48.73	787.44	787.53
D	1060+34.33	-48.93	787.43	787.54
E	1060+44.33	-49.13	787.41	787.53
F	1060+54.33	-49.33	787.40	787.51
G	1060+64.32	-49.53	787.38	787.48
H	1060+74.32	-49.73	787.36	787.45
I	1060+84.32	-49.93	787.33	787.40
J	1060+94.32	-50.13	787.30	787.35
K	1061+04.32	-50.33	787.27	787.31
L	1061+14.31	-50.53	787.23	787.26
M	1061+24.31	-50.73	787.20	787.22
℄ Brg. Pier	1061+29.84	-50.84	787.17	787.19
N	1061+39.84	-51.04	787.13	787.17
O	1061+49.83	-51.24	787.08	787.14
P	1061+59.83	-51.44	787.03	787.12
Q	1061+69.83	-51.64	786.98	787.09
R	1061+79.83	-51.84	786.92	787.07
S	1061+89.83	-52.04	786.87	787.03
T	1061+99.82	-52.24	786.80	786.98
U	1062+09.82	-52.44	786.74	786.93
V	1062+19.82	-52.64	786.67	786.85
W	1062+29.82	-52.84	786.60	786.76
X	1062+39.82	-53.04	786.52	786.65
Y	1062+49.81	-53.24	786.44	786.54
Z	1062+59.81	-53.44	786.36	786.41
℄ Brg. E. Abut.	1062+65.34	-53.55	786.31	786.33
Bk. E. Abut.	1062+67.18	-53.59	786.30	786.32

GIRDER 2

Location	Station	Offset	Theoretical Grade Elevations	Theoretical Grade Elevations Adjusted For Dead Load Deflection and Grinding
Bk. W Abut.	1059+92.49	-48.17	787.44	787.46
℄ Brg. W. Abut.	1059+94.33	-48.19	787.44	787.46
A	1060+04.33	-48.29	787.45	787.50
B	1060+14.33	-48.39	787.44	787.52
C	1060+24.33	-48.49	787.44	787.54
D	1060+34.33	-48.59	787.43	787.55
E	1060+44.33	-48.69	787.42	787.54
F	1060+54.33	-48.79	787.41	787.52
G	1060+64.33	-48.89	787.39	787.50
H	1060+74.33	-48.99	787.37	787.46
I	1060+84.33	-49.09	787.35	787.42
J	1060+94.33	-49.19	787.32	787.37
K	1061+04.33	-49.29	787.29	787.33
L	1061+14.33	-49.39	787.26	787.28
M	1061+24.33	-49.49	787.22	787.24
℄ Brg. Pier	1061+29.99	-49.54	787.20	787.22
N	1061+39.99	-49.64	787.16	787.19
O	1061+49.99	-49.74	787.11	787.17
P	1061+59.99	-49.84	787.07	787.15
Q	1061+69.99	-49.94	787.02	787.13
R	1061+79.99	-50.04	786.96	787.10
S	1061+89.99	-50.14	786.90	787.07
T	1061+99.99	-50.24	786.84	787.03
U	1062+09.99	-50.34	786.78	786.97
V	1062+19.99	-50.44	786.71	786.89
W	1062+29.99	-50.54	786.64	786.80
X	1062+39.99	-50.64	786.57	786.70
Y	1062+49.99	-50.74	786.49	786.59
Z	1062+59.99	-50.84	786.41	786.46
℄ Brg. E. Abut.	1062+65.65	-50.90	786.37	786.39
Bk. E. Abut.	1062+67.50	-50.92	786.35	786.37

GIRDER 3

Location	Station	Offset	Theoretical Grade Elevations	Theoretical Grade Elevations Adjusted For Dead Load Deflection and Grinding
Bk. W Abut.	1059+93.01	-43.75	787.54	787.56
℄ Brg. W. Abut.	1059+94.86	-43.75	787.54	787.56
A	1060+04.86	-43.75	787.54	787.60
B	1060+14.86	-43.75	787.54	787.64
C	1060+24.86	-43.75	787.54	787.66
D	1060+34.86	-43.75	787.53	787.68
E	1060+44.86	-43.75	787.52	787.68
F	1060+54.86	-43.75	787.51	787.66
G	1060+64.86	-43.75	787.50	787.64
H	1060+74.86	-43.75	787.48	787.60
I	1060+84.86	-43.75	787.46	787.55
J	1060+94.86	-43.75	787.43	787.51
K	1061+04.86	-43.75	787.40	787.45
L	1061+14.86	-43.75	787.37	787.41
M	1061+24.86	-43.75	787.34	787.36
℄ Brg. Pier	1061+30.68	-43.75	787.32	787.34
N	1061+40.68	-43.75	787.28	787.31
O	1061+50.68	-43.75	787.24	787.29
P	1061+60.68	-43.75	787.19	787.27
Q	1061+70.68	-43.75	787.14	787.25
R	1061+80.68	-43.75	787.09	787.23
S	1061+90.68	-43.75	787.03	787.20
T	1062+00.68	-43.75	786.97	787.16
U	1062+10.68	-43.75	786.91	787.10
V	1062+20.68	-43.75	786.85	787.03
W	1062+30.68	-43.75	786.78	786.94
X	1062+40.68	-43.75	786.71	786.84
Y	1062+50.68	-43.75	786.63	786.73
Z	1062+60.68	-43.75	786.56	786.60
℄ Brg. E. Abut.	1062+66.50	-43.75	786.51	786.53
Bk. E. Abut.	1062+68.35	-43.75	786.49	786.51

GIRDER 4

Location	Station	Offset	Theoretical Grade Elevations	Theoretical Grade Elevations Adjusted For Dead Load Deflection and Grinding
Bk. W Abut.	1059+93.93	-36.00	787.70	787.72
℄ Brg. W. Abut.	1059+95.77	-36.00	787.70	787.72
A	1060+05.77	-36.00	787.70	787.77
B	1060+15.77	-36.00	787.70	787.80
C	1060+25.77	-36.00	787.70	787.83
D	1060+35.77	-36.00	787.69	787.85
E	1060+45.77	-36.00	787.69	787.85
F	1060+55.77	-36.00	787.67	787.83
G	1060+65.77	-36.00	787.66	787.81
H	1060+75.77	-36.00	787.64	787.77
I	1060+85.77	-36.00	787.62	787.72
J	1060+95.77	-36.00	787.59	787.67
K	1061+05.77	-36.00	787.56	787.62
L	1061+15.77	-36.00	787.53	787.57
M	1061+25.77	-36.00	787.50	787.52
℄ Brg. Pier	1061+31.60	-36.00	787.48	787.50
N	1061+41.60	-36.00	787.44	787.46
O	1061+51.60	-36.00	787.39	787.44
P	1061+61.60	-36.00	787.35	787.41
Q	1061+71.60	-36.00	787.30	787.39
R	1061+81.60	-36.00	787.24	787.36
S	1061+91.60	-36.00	787.19	787.33
T	1062+01.60	-36.00	787.13	787.29
U	1062+11.60	-36.00	787.07	787.23
V	1062+21.60	-36.00	787.00	787.16
W	1062+31.60	-36.00	786.93	787.08
X	1062+41.60	-36.00	786.86	786.98
Y	1062+51.60	-36.00	786.79	786.87
Z	1062+61.60	-36.00	786.71	786.76
℄ Brg. E. Abut.	1062+67.42	-36.00	786.66	786.68
Bk. E. Abut.	1062+69.26	-36.00	786.65	786.67

GIRDER 5

Location	Station	Offset	Theoretical Grade Elevations	Theoretical Grade Elevations Adjusted For Dead Load Deflection and Grinding
Bk. W Abut.	1059+94.85	-28.25	787.82	787.84
℄ Brg. W. Abut.	1059+96.69	-28.25	787.82	787.84
A	1060+06.69	-28.25	787.82	787.89
B	1060+16.69	-28.25	787.82	787.92
C	1060+26.69	-28.25	787.82	787.95
D	1060+36.69	-28.25	787.81	787.97
E	1060+46.69	-28.25	787.81	787.97
F	1060+56.69	-28.25	787.79	787.95
G	1060+66.69	-28.25	787.78	787.93
H	1060+76.69	-28.25	787.76	787.89
I	1060+86.69	-28.25	787.74	787.84
J	1060+96.69	-28.25	787.71	787.79
K	1061+06.69	-28.25	787.68	787.74
L	1061+16.69	-28.25	787.65	787.69
M	1061+26.69	-28.25	787.61	787.64
℄ Brg. Pier	1061+32.51	-28.25	787.59	787.61
N	1061+42.51	-28.25	787.55	787.58
O	1061+52.51	-28.25	787.51	787.56
P	1061+62.51	-28.25	787.46	787.53
Q	1061+72.51	-28.25	787.41	787.51
R	1061+82.51	-28.25	787.36	787.48
S	1061+92.51	-28.25	787.31	787.45
T	1062+02.51	-28.25	787.25	787.40
U	1062+12.51	-28.25	787.18	787.35
V	1062+22.51	-28.25	787.12	787.28
W	1062+32.51	-28.25	787.05	787.19
X	1062+42.51	-28.25	786.98	787.10
Y	1062+52.51	-28.25	786.90	786.99
Z	1062+62.51	-28.25	786.82	786.87
℄ Brg. E. Abut.	1062+68.34	-28.25	786.78	786.80
Bk. E. Abut.	1062+70.18	-28.25	786.76	786.78

CROWN

Location	Station	Offset	Theoretical Grade Elevations	Theoretical Grade Elevations Adjusted For Dead Load Deflection and Grinding
Bk. W Abut.	1059+95.35	-24.00	787.89	787.91
℄ Brg. W. Abut.	1059+97.20	-24.00	787.89	787.91
A	1060+07.20	-24.00	787.89	787.95
B	1060+17.20	-24.00	787.89	787.99
C	1060+27.20	-24.00	787.89	788.02
D	1060+37.20	-24.00	787.88	788.03
E	1060+47.20	-24.00	787.87	788.03
F	1060+57.20	-24.00	787.86	788.02
G	1060+67.20	-24.00	787.84	787.99
H	1060+77.20	-24.00	787.82	787.96
I	1060+87.20	-24.00	787.80	787.91
J	1060+97.20	-24.00	787.78	787.86
K	1061+07.20	-24.00	787.75	787.80
L	1061+17.20	-24.00	787.71	787.75
M	1061+27.20	-24.00	787.68	787.71
℄ Brg. Pier	1061+33.02	-24.00	787.66	787.68
N	1061+43.02	-24.00	787.62	787.65
O	1061+53.02	-24.00	787.57	787.62
P	1061+63.02	-24.00	787.53	787.59
Q	1061+73.02	-24.00	787.48	787.57
R	1061+83.02	-24.00	787.42	787.54
S	1061+93.02	-24.00	787.37	787.51
T	1062+03.02	-24.00	787.31	787.47
U	1062+13.02	-24.00	787.25	787.41
V	1062+23.02	-24.00	787.18	787.34
W	1062+33.02	-24.00	787.11	787.26
X	1062+43.02	-24.00	787.04	787.16
Y	1062+53.02	-24.00	786.96	787.05
Z	1062+63.02	-24.00	786.89	786.93
℄ Brg. E. Abut.	1062+68.84	-24.00	786.84	786.86
Bk. E. Abut.	1062+70.69	-24.00	786.82	786.84

GIRDER 6

Location	Station	Offset	Theoretical Grade Elevations	Theoretical Grade Elevations Adjusted For Dead Load Deflection and Grinding
Bk. W Abut.	1059+95.76	-20.50	787.83	787.85
℄ Brg. W. Abut.	1059+97.61	-20.50	787.83	787.85
A	1060+07.61	-20.50	787.84	787.90
B	1060+17.61	-20.50	787.84	787.94
C	1060+27.61	-20.50	787.83	787.96
D	1060+37.61	-20.50	787.83	787.98
E	1060+47.61	-20.50	787.82	787.98
F	1060+57.61	-20.50	787.80	787.96
G	1060+67.61	-20.50	787.79	787.94
H	1060+77.61	-20.50	787.77	787.90
I	1060+87.61	-20.50	787.75	787.85
J	1060+97.61	-20.50	787.72	787.80
K	1061+07.61	-20.50	787.69	787.75
L	1061+17.61	-20.50	787.66	787.70
M	1061+27.61	-20.50	787.62	787.65
℄ Brg. Pier	1061+33.43	-20.50	787.60	787.62
N	1061+43.43	-20.50	787.56	787.59
O	1061+53.43	-20.50	787.52	787.56
P	1061+63.43	-20.50	787.47	787.54
Q	1061+73.43	-20.50	787.42	787.51
R	1061+83.43	-20.50	787.37	787.49
S	1061+93.43	-20.50	787.31	787.45
T	1062+03.43	-20.50	787.25	787.41
U	1062+13.43	-20.50	787.19	787.35
V	1062+23.43	-20.50	787.12	787.28
W	1062+33.43	-20.50	787.05	787.20
X	1062+43.43	-20.50	786.98	787.10
Y	1062+53.43	-20.50	786.91	786.99
Z	1062+63.43	-20.50	786.83	786.87
℄ Brg. E. Abut.	1062+69.25	-20.50	786.78	786.80
Bk. E. Abut.	1062+71.10	-20.50	786.77	786.79

GIRDER 7

Location	Station	Offset	Theoretical Grade Elevations	Theoretical Grade Elevations Adjusted For Dead Load Deflection and Grinding
Bk. W Abut.	1059+96.68	-12.75	787.71	787.73
℄ Brg. W. Abut.	1059+98.53	-12.75	787.71	787.73
A	1060+08.53	-12.75	787.71	787.78
B	1060+18.53	-12.75	787.71	787.81
C	1060+28.53	-12.75	787.71	787.84
D	1060+38.53	-12.75	787.70	787.86
E	1060+48.53	-12.75	787.69	787.86
F	1060+58.53	-12.75	787.68	787.84
G	1060+68.53	-12.75	787.66	787.82
H	1060+78.53	-12.75	787.64	787.78
I	1060+88.53	-12.75	787.62	787.73
J	1060+98.53	-12.75	787.60	787.68
K	1061+08.53	-12.75	787.57	787.62
L	1061+18.53	-12.75	787.53	787.57
M	1061+28.53	-12.75	787.50	787.52
℄ Brg. Pier	1061+34.35	-12.75	787.48	787.50
N	1061+44.35	-12.75	787.44	787.47
O	1061+54.35	-12.75	787.39	787.44
P	1061+64.35	-12.75	787.35	787.41
Q	1061+74.35	-12.75	787.30	787.39
R	1061+84.35	-12.75	787.24	787.36
S	1061+94.35	-12.75	787.19	787.33
T	1062+04.35	-12.75	787.13	787.28
U	1062+14.35	-12.75	787.06	787.23
V	1062+24.35	-12.75	787.00	787.16
W	1062+34.35	-12.75	786.93	787.07
X	1062+44.35	-12.75	786.85	786.98
Y	1062+54.35	-12.75	786.78	786.86
Z	1062+64.35	-12.75	786.70	786.74
℄ Brg. E. Abut.	1062+70.17	-12.75	786.65	786.67
Bk. E. Abut.	1062+72.02	-12.75	786.64	786.66

STAGE CONSTRUCTION JOINT

Location	Station	Offset	Theoretical Grade Elevations	Theoretical Grade Elevations Adjusted For Dead Load Deflection and Grinding
Bk. W Abut.	1059+96.92	-10.75	787.67	787.69
℄ Brg. W. Abut.	1059+98.76	-10.75	787.67	787.69
A	1060+08.76	-10.75	787.68	787.74
B	1060+18.76	-10.75	787.68	787.78
C	1060+28.76	-10.75	787.67	787.80
D	1060+38.76	-10.75	787.67	787.82
E	1060+48.76	-10.75	787.66	787.82
F	1060+58.76	-10.75	787.64	787.80
G	1060+68.76	-10.75	787.63	787.78
H	1060+78.76	-10.75	787.61	787.74
I	1060+88.76	-10.75	787.58	787.69
J	1060+98.76	-10.75	787.56	787.64
K	1061+08.76	-10.75	787.53	787.59
L	1061+18.76	-10.75	787.50	787.53
M	1061+28.76	-10.75	787.46	787.49
℄ Brg. Pier	1061+34.59	-10.75	787.44	787.46
N	1061+44.59	-10.75	787.40	787.43
O	1061+54.59	-10.75	787.35	787.40
P	1061+64.59	-10.75	787.31	787.37
Q	1061+74.59	-10.75	787.26	787.35
R	1061+84.59	-10.75	787.20	787.32
S	1061+94.59	-10.75	787.15	787.29
T	1062+04.59	-10.75	787.09	787.24
U	1062+14.59	-10.75	787.02	787.19
V	1062+24.59	-10.75	786.96	787.12
W	1062+34.59	-10.75	786.89	787.03
X	1062+44.59	-10.75	786.81	786.94
Y	1062+54.59	-10.75	786.74	786.82
Z	1062+64.59	-10.75	786.66	786.71
℄ Brg. E. Abut.	1062+70.41	-10.75	786.61	786.63
Bk. E. Abut.	1062+72.25	-10.75	786.60	786.62

GIRDER 8

Location	Station	Offset	Theoretical Grade Elevations	Theoretical Grade Elevations Adjusted For Dead Load Deflection and Grinding
Bk. W Abut.	1059+97.60	-5.00	787.55	787.57
℄ Brg. W. Abut.	1059+99.45	-5.00	787.55	787.58
A	1060+09.45	-5.00	787.56	787.63
B	1060+19.45	-5.00	787.56	787.67
C	1060+29.45	-5.00	787.55	787.70
D	1060+39.45	-5.00	787.55	787.72
E	1060+49.45	-5.00	787.54	787.72
F	1060+59.45	-5.00	787.52	787.71
G	1060+69.45	-5.00	787.50	787.68
H	1060+79.45	-5.00	787.49	787.64
I	1060+89.45	-5.00	787.46	787.58
J	1060+99.45	-5.00	787.44	787.53
K	1061+09.45	-5.00	787.41	787.47
L	1061+19.45	-5.00	787.37	787.41
M	1061+29.45	-5.00	787.34	787.36
℄ Brg. Pier	1061+35.27	-5.00	787.32	787.34
N	1061+45.27	-5.00	787.27	787.31
O	1061+55.27	-5.00	787.23	787.28
P	1061+65.27	-5.00	787.18	787.26
Q	1061+75.27	-5.00	787.13	787.24
R	1061+85.27	-5.00	787.08	787.21
S	1061+95.27	-5.00	787.02	787.18
T	1062+05.27	-5.00	786.96	787.14
U	1062+15.27	-5.00	786.90	787.09
V	1062+25.27	-5.00	786.83	787.01
W	1062+35.27	-5.00	786.76	786.93
X	1062+45.27	-5.00	786.69	786.83
Y	1062+55.27	-5.00	786.61	786.71
Z	1062+65.27	-5.00	786.53	786.58
℄ Brg. E. Abut.	1062+71.09	-5.00	786.49	786.51
Bk. E. Abut.	1062+72.93	-5.00	786.47	786.49

P.G. I-74 WESTBOUND (SN 010-1019)

Location	Station	Offset	Theoretical Grade Elevations	Theoretical Grade Elevations Adjusted For Dead Load Deflection and Grinding
Bk. W Abut.	1059+98.19	0.00	787.45	787.47
℄ Brg. W. Abut.	1060+00.04	0.00	787.45	787.47
A	1060+10.04	0.00	787.45	787.52
B	1060+20.04	0.00	787.45	787.56
C	1060+30.04	0.00	787.45	787.60
D	1060+40.04	0.00	787.44	787.62
E	1060+50.04	0.00	787.43	787.62
F	1060+60.04	0.00	787.42	787.60
G	1060+70.04	0.00	787.40	787.57
H	1060+80.04	0.00	787.38	787.53
I	1060+90.04	0.00	787.36	787.48
J	1061+00.04	0.00	787.33	787.42
K	1061+10.04	0.00	787.30	787.36
L	1061+20.04	0.00	787.27	787.31
M	1061+30.04	0.00	787.23	787.26
℄ Brg. Pier	1061+35.86	0.00	787.21	787.23
N	1061+45.86	0.00	787.17	787.20
O	1061+55.86	0.00	787.12	787.17
P	1061+65.86	0.00	787.08	787.15
Q	1061+75.86	0.00	787.03	787.13
R	1061+85.86	0.00	786.97	787.11
S	1061+95.86	0.00	786.91	787.07
T	1062+05.86	0.00	786.85	787.03
U	1062+15.86	0.00	786.79	786.98
V	1062+25.86	0.00	786.72	786.91
W	1062+35.86	0.00	786.65	786.82
X	1062+45.86	0.00	786.58	786.72
Y	1062+55.86	0.00	786.50	786.60
Z	1062+65.86	0.00	786.43	786.47
℄ Brg. E. Abut.	1062+71.68	0.00	786.38	786.40
Bk. E. Abut.	1062+73.53	0.00	786.36	786.38

GIRDER 9

Location	Station	Offset	Theoretical Grade Elevations	Theoretical Grade Elevations Adjusted For Dead Load Deflection and Grinding
Bk. W Abut.	1059+98.52	2.75	787.39	787.41
℄ Brg. W. Abut.	1060+00.36	2.75	787.39	787.41
A	1060+10.36	2.75	787.40	787.47
B	1060+20.36	2.75	787.39	787.51
C	1060+30.36	2.75	787.39	787.54
D	1060+40.36	2.75	787.38	787.56
E	1060+50.36	2.75	787.37	787.56
F	1060+60.36	2.75	787.36	787.54
G	1060+70.36	2.75	787.34	787.51
H	1060+80.36	2.75	787.32	787.47
I	1060+90.36	2.75	787.30	787.42
J	1061+00.36	2.75	787.27	787.36
K	1061+10.36	2.75	787.24	787.30
L	1061+20.36	2.75	787.21	787.25
M	1061+30.36	2.75	787.17	787.20
℄ Brg. Pier	1061+36.18	2.75	787.15	787.17
N	1061+46.18	2.75	787.11	787.14
O	1061+56.18	2.75	787.06	787.11
P	1061+66.18	2.75	787.02	787.09
Q	1061+76.18	2.75	786.97	787.07
R	1061+86.18	2.75	786.91	787.05
S	1061+96.18	2.75	786.86	787.02
T	1062+06.18	2.75	786.79	786.97
U	1062+16.18	2.75	786.73	786.92
V	1062+26.18	2.75	786.66	786.85
W	1062+36.18	2.75	786.59	786.76
X	1062+46.18	2.75	786.52	786.66
Y	1062+56.18	2.75	786.45	786.54
Z	1062+66.18	2.75	786.37	786.41
℄ Brg. E. Abut.	1062+72.01	2.75	786.32	786.34
Bk. E. Abut.	1062+73.85	2.75	786.30	786.32

GIRDER 10

Location	Station	Offset	Theoretical Grade Elevations	Theoretical Grade Elevations Adjusted For Dead Load Deflection and Grinding
Bk. W Abut.	1059+99.43	10.50	787.23	787.25
℄ Brg. W. Abut.	1060+01.28	10.50	787.23	787.25
A	1060+11.28	10.50	787.23	787.30
B	1060+21.28	10.50	787.23	787.35
C	1060+31.28	10.50	787.23	787.38
D	1060+41.28	10.50	787.22	787.40
E	1060+51.28	10.50	787.21	787.39
F	1060+61.28	10.50	787.20	787.38
G	1060+71.28	10.50	787.18	787.35
H	1060+81.28	10.50	787.16	787.31
I	1060+91.28	10.50	787.13	787.26
J	1061+01.28	10.50	787.11	787.20
K	1061+11.28	10.50	787.08	787.14
L	1061+21.28	10.50	787.04	787.08
M	1061+31.28	10.50	787.01	787.03
℄ Brg. Pier	1061+37.10	10.50	786.99	787.01
N	1061+47.10	10.50	786.94	786.97
O	1061+57.10	10.50	786.90	786.95
P	1061+67.10	10.50	786.85	786.93
Q	1061+77.10	10.50	786.80	786.90
R	1061+87.10	10.50	786.75	786.88
S	1061+97.10	10.50	786.69	786.85
T	1062+07.10	10.50	786.63	786.81
U	1062+17.10	10.50	786.56	786.75
V	1062+27.10	10.50	786.50	786.68
W	1062+37.10	10.50	786.43	786.59
X	1062+47.10	10.50	786.35	786.49
Y	1062+57.10	10.50	786.28	786.37
Z	1062+67.10	10.50	786.20	786.25
℄ Brg. E. Abut.	1062+72.92	10.50	786.15	786.17
Bk. E. Abut.	1062+74.77	10.50	786.13	786.15

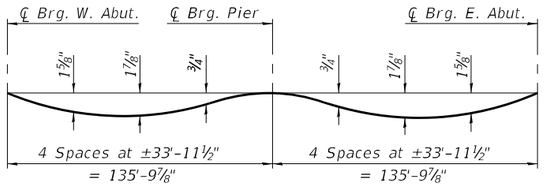

GIRDER 11 - 13

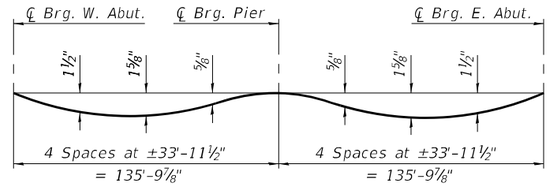

GIRDER 14 - 17

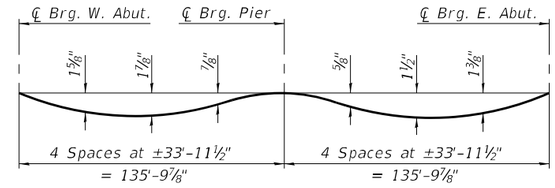

GIRDER 18

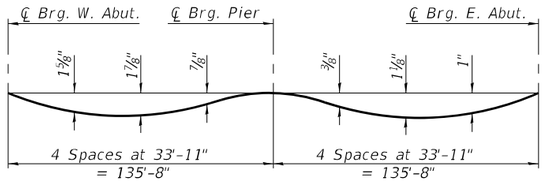

GIRDER 19

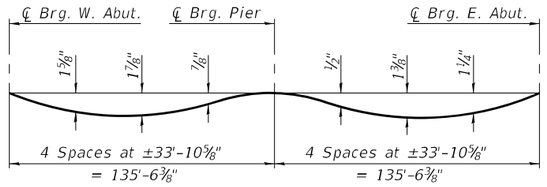

GIRDER 20

DEAD LOAD DEFLECTION DIAGRAM

(Includes weight of concrete only).

Notes:

The above deflections are not to be used in the field if the engineer is working from the grade elevations adjusted for dead load deflections and grinding as shown on Sheets 15 thru 19 of 79.

Stations and offsets are referenced from ℄ F.A.I. Rte. 74 and P.G. SN 010-1018, respectively.

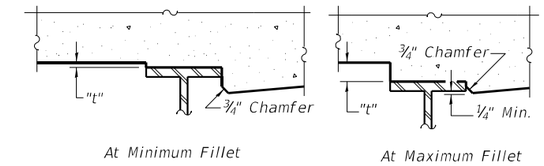

To determine "t": After all structural steel has been erected, elevations of the top flanges of the girders shall be taken at intervals shown below. These elevations subtracted from the "Theoretical Grade Elevations Adjusted for Dead Load Deflection and Grinding" shown on Sheets 15 thru 19 of 79, minus the initial slab thickness prior to grinding, equals the fillet heights "t" above top flange of girders.

The slab is to be ground after curing to achieve smoothness, but the slab is not to be ground to elevations below the "Theoretical Grade Elevations" shown on Sheets 15 thru 19 of 79. For grinding the deck, see Special Provisions.

FILLET HEIGHTS

*At ℄ Brg. and perpendicular to F.A.I. Rte. 74

**Ramp C and Girder 20 are parallel with a perpendicular distance of 4'-6"

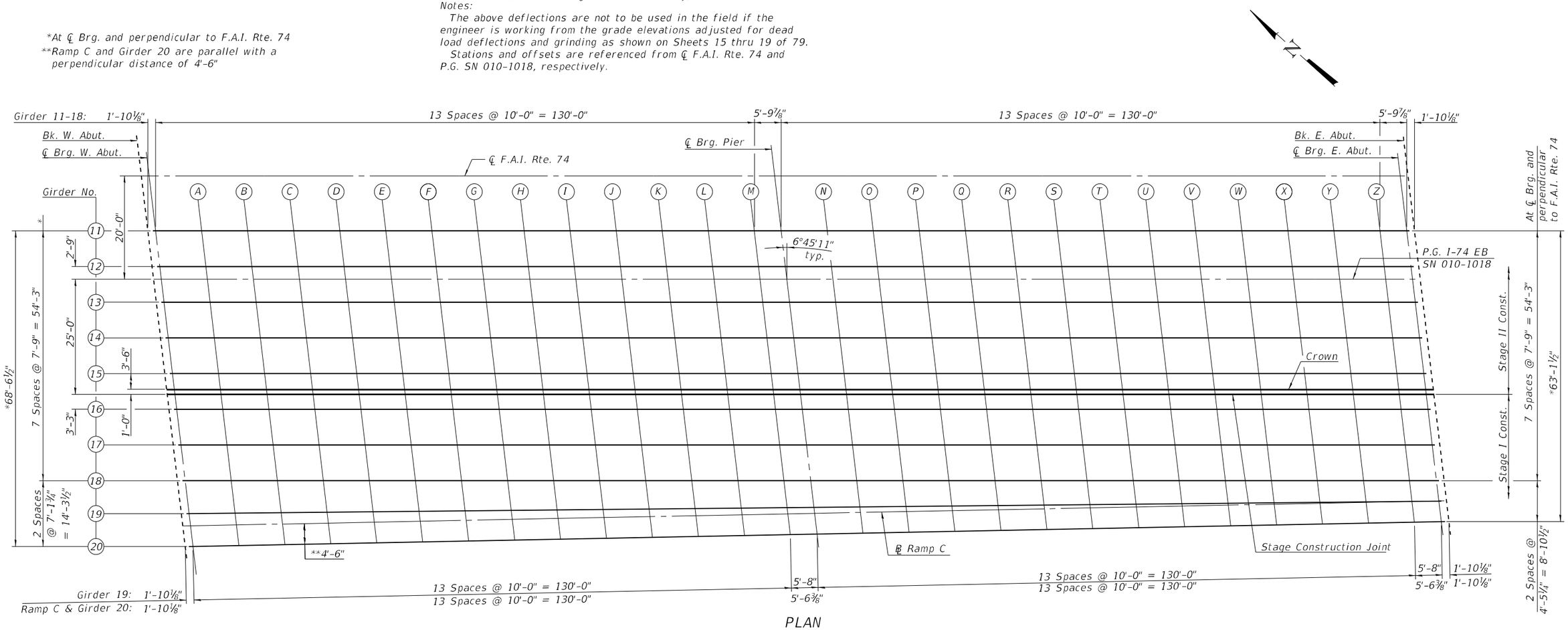

PLAN

MODEL: Default
FILE NAME: 0101018 & 0101019-70C01-014-TOS Elevations SN 010-1018 (EB)

1/21/2022 9:16:41 AM

BACON | FARMER | WORKMAN
ENGINEERING & TESTING, INC.
403 NORTH COURT STREET
MARION, IL (062)5 62969
PHONE - 618.997.9196

USER NAME =	DESIGNED - FAM	REVISED -	
	CHECKED - GBR	REVISED -	
PLOT SCALE =	DRAWN - FAM	REVISED -	
PLOT DATE = 1/21/2022	CHECKED - GBR	REVISED -	

STATE OF ILLINOIS
DEPARTMENT OF TRANSPORTATION

TOP OF SLAB ELEVATIONS
STRUCTURE NO. 010-1018 (EB)

SHEET NO. 14 OF 79 SHEETS

F.A.I. RTE.	SECTION	COUNTY	TOTAL SHEETS	SHEET NO.
57	10-(33,34,5,14)R & (10-34)B	CHAMPAIGN	1182	896
		CONTRACT NO. 70C01		
	ILLINOIS	FED. AID PROJECT		

GIRDER 11

Location	Station	Offset	Theoretical Grade Elevations	Theoretical Grade Elevations Adjusted For Dead Load Deflection and Grinding
Bk. W Abut.	1060+04.05	-10.50	787.23	787.25
℄ Brg. W. Abut.	1060+05.90	-10.50	787.23	787.25
A	1060+15.90	-10.50	787.23	787.30
B	1060+25.90	-10.50	787.23	787.34
C	1060+35.90	-10.50	787.23	787.37
D	1060+45.90	-10.50	787.22	787.39
E	1060+55.90	-10.50	787.20	787.39
F	1060+65.90	-10.50	787.19	787.37
G	1060+75.90	-10.50	787.17	787.34
H	1060+85.90	-10.50	787.15	787.30
I	1060+95.90	-10.50	787.12	787.24
J	1061+05.90	-10.50	787.09	787.19
K	1061+15.90	-10.50	787.06	787.13
L	1061+25.90	-10.50	787.03	787.07
M	1061+35.90	-10.50	786.99	787.02
℄ Brg. Pier	1061+41.72	-10.50	786.97	786.99
N	1061+51.72	-10.50	786.92	786.95
O	1061+61.72	-10.50	786.88	786.93
P	1061+71.72	-10.50	786.83	786.90
Q	1061+81.72	-10.50	786.78	786.88
R	1061+91.72	-10.50	786.72	786.85
S	1062+01.72	-10.50	786.66	786.82
T	1062+11.72	-10.50	786.60	786.78
U	1062+21.72	-10.50	786.53	786.72
V	1062+31.72	-10.50	786.46	786.65
W	1062+41.72	-10.50	786.39	786.56
X	1062+51.72	-10.50	786.32	786.45
Y	1062+61.72	-10.50	786.24	786.34
Z	1062+71.72	-10.50	786.16	786.21
℄ Brg. E. Abut.	1062+77.54	-10.50	786.11	786.13
Bk. E. Abut.	1062+79.39	-10.50	786.09	786.12

GIRDER 12

Location	Station	Offset	Theoretical Grade Elevations	Theoretical Grade Elevations Adjusted For Dead Load Deflection and Grinding
Bk. W Abut.	1060+04.97	-2.75	787.39	787.42
℄ Brg. W. Abut.	1060+06.82	-2.75	787.40	787.42
A	1060+16.82	-2.75	787.40	787.46
B	1060+26.82	-2.75	787.39	787.51
C	1060+36.82	-2.75	787.39	787.54
D	1060+46.82	-2.75	787.38	787.55
E	1060+56.82	-2.75	787.36	787.55
F	1060+66.82	-2.75	787.35	787.53
G	1060+76.82	-2.75	787.33	787.50
H	1060+86.82	-2.75	787.31	787.46
I	1060+96.82	-2.75	787.28	787.40
J	1061+06.82	-2.75	787.25	787.34
K	1061+16.82	-2.75	787.22	787.28
L	1061+26.82	-2.75	787.19	787.23
M	1061+36.82	-2.75	787.15	787.17
℄ Brg. Pier	1061+42.64	-2.75	787.12	787.15
N	1061+52.64	-2.75	787.08	787.11
O	1061+62.64	-2.75	787.03	787.08
P	1061+72.64	-2.75	786.98	787.06
Q	1061+82.64	-2.75	786.93	787.04
R	1061+92.64	-2.75	786.88	787.01
S	1062+02.64	-2.75	786.82	786.98
T	1062+12.64	-2.75	786.75	786.93
U	1062+22.64	-2.75	786.69	786.88
V	1062+32.64	-2.75	786.62	786.80
W	1062+42.64	-2.75	786.55	786.71
X	1062+52.64	-2.75	786.47	786.61
Y	1062+62.64	-2.75	786.39	786.49
Z	1062+72.64	-2.75	786.31	786.36
℄ Brg. E. Abut.	1062+78.46	-2.75	786.26	786.28
Bk. E. Abut.	1062+80.31	-2.75	786.25	786.27

P.G. I-74 EASTBOUND (SN 010-1018)

Location	Station	Offset	Theoretical Grade Elevations	Theoretical Grade Elevations Adjusted For Dead Load Deflection and Grinding
Bk. W Abut.	1060+05.30	0.00	787.45	787.47
℄ Brg. W. Abut.	1060+07.14	0.00	787.45	787.47
A	1060+17.14	0.00	787.45	787.52
B	1060+27.14	0.00	787.45	787.56
C	1060+37.14	0.00	787.44	787.59
D	1060+47.14	0.00	787.43	787.61
E	1060+57.14	0.00	787.42	787.61
F	1060+67.14	0.00	787.40	787.59
G	1060+77.14	0.00	787.39	787.56
H	1060+87.14	0.00	787.36	787.51
I	1060+97.14	0.00	787.34	787.46
J	1061+07.14	0.00	787.31	787.40
K	1061+17.14	0.00	787.28	787.34
L	1061+27.14	0.00	787.24	787.28
M	1061+37.14	0.00	787.20	787.23
℄ Brg. Pier	1061+42.96	0.00	787.18	787.20
N	1061+52.96	0.00	787.14	787.17
O	1061+62.96	0.00	787.09	787.14
P	1061+72.96	0.00	787.04	787.12
Q	1061+82.96	0.00	786.99	787.09
R	1061+92.96	0.00	786.93	787.07
S	1062+02.96	0.00	786.87	787.03
T	1062+12.96	0.00	786.81	786.99
U	1062+22.96	0.00	786.74	786.93
V	1062+32.96	0.00	786.67	786.86
W	1062+42.96	0.00	786.60	786.77
X	1062+52.96	0.00	786.53	786.66
Y	1062+62.96	0.00	786.45	786.55
Z	1062+72.96	0.00	786.37	786.42
℄ Brg. E. Abut.	1062+78.79	0.00	786.32	786.34
Bk. E. Abut.	1062+80.63	0.00	786.30	786.32

GIRDER 13

Location	Station	Offset	Theoretical Grade Elevations	Theoretical Grade Elevations Adjusted For Dead Load Deflection and Grinding
Bk. W Abut.	1060+05.89	5.00	787.56	787.58
℄ Brg. W. Abut.	1060+07.73	5.00	787.56	787.58
A	1060+17.73	5.00	787.56	787.63
B	1060+27.73	5.00	787.55	787.67
C	1060+37.73	5.00	787.55	787.70
D	1060+47.73	5.00	787.54	787.71
E	1060+57.73	5.00	787.52	787.71
F	1060+67.73	5.00	787.51	787.69
G	1060+77.73	5.00	787.49	787.66
H	1060+87.73	5.00	787.47	787.62
I	1060+97.73	5.00	787.44	787.56
J	1061+07.73	5.00	787.41	787.50
K	1061+17.73	5.00	787.38	787.44
L	1061+27.73	5.00	787.34	787.38
M	1061+37.73	5.00	787.31	787.33
℄ Brg. Pier	1061+43.56	5.00	787.28	787.30
N	1061+53.56	5.00	787.24	787.27
O	1061+63.56	5.00	787.19	787.24
P	1061+73.56	5.00	787.14	787.22
Q	1061+83.56	5.00	787.09	787.19
R	1061+93.56	5.00	787.03	787.17
S	1062+03.56	5.00	786.97	787.13
T	1062+13.56	5.00	786.91	787.09
U	1062+23.56	5.00	786.84	787.03
V	1062+33.56	5.00	786.77	786.96
W	1062+43.56	5.00	786.70	786.87
X	1062+53.56	5.00	786.63	786.76
Y	1062+63.56	5.00	786.55	786.64
Z	1062+73.56	5.00	786.47	786.52
℄ Brg. E. Abut.	1062+79.38	5.00	786.42	786.44
Bk. E. Abut.	1062+81.22	5.00	786.40	786.42

GIRDER 14

Location	Station	Offset	Theoretical Grade Elevations	Theoretical Grade Elevations Adjusted For Dead Load Deflection and Grinding
Bk. W Abut.	1060+06.81	12.75	787.71	787.74
℄ Brg. W. Abut.	1060+08.65	12.75	787.71	787.74
A	1060+18.65	12.75	787.71	787.78
B	1060+28.65	12.75	787.71	787.81
C	1060+38.65	12.75	787.70	787.84
D	1060+48.65	12.75	787.69	787.85
E	1060+58.65	12.75	787.68	787.84
F	1060+68.65	12.75	787.66	787.83
G	1060+78.65	12.75	787.64	787.80
H	1060+88.65	12.75	787.62	787.75
I	1060+98.65	12.75	787.60	787.70
J	1061+08.65	12.75	787.57	787.65
K	1061+18.65	12.75	787.53	787.59
L	1061+28.65	12.75	787.50	787.54
M	1061+38.65	12.75	787.46	787.49
℄ Brg. Pier	1061+44.47	12.75	787.44	787.46
N	1061+54.47	12.75	787.39	787.42
O	1061+64.47	12.75	787.34	787.39
P	1061+74.47	12.75	787.29	787.36
Q	1061+84.47	12.75	787.24	787.33
R	1061+94.47	12.75	787.18	787.30
S	1062+04.47	12.75	787.12	787.27
T	1062+14.47	12.75	787.06	787.22
U	1062+24.47	12.75	787.00	787.16
V	1062+34.47	12.75	786.93	787.09
W	1062+44.47	12.75	786.85	787.00
X	1062+54.47	12.75	786.78	786.90
Y	1062+64.47	12.75	786.70	786.78
Z	1062+74.47	12.75	786.62	786.66
℄ Brg. E. Abut.	1062+80.30	12.75	786.57	786.59
Bk. E. Abut.	1062+82.14	12.75	786.55	786.57

GIRDER 15

Location	Station	Offset	Theoretical Grade Elevations	Theoretical Grade Elevations Adjusted For Dead Load Deflection and Grinding
Bk. W Abut.	1060+07.72	20.50	787.84	787.86
℄ Brg. W. Abut.	1060+09.57	20.50	787.84	787.86
A	1060+19.57	20.50	787.83	787.90
B	1060+29.57	20.50	787.83	787.93
C	1060+39.57	20.50	787.82	787.96
D	1060+49.57	20.50	787.81	787.97
E	1060+59.57	20.50	787.80	787.96
F	1060+69.57	20.50	787.78	787.95
G	1060+79.57	20.50	787.76	787.92
H	1060+89.57	20.50	787.74	787.87
I	1060+99.57	20.50	787.71	787.82
J	1061+09.57	20.50	787.68	787.77
K	1061+19.57	20.50	787.65	787.71
L	1061+29.57	20.50	787.62	787.65
M	1061+39.57	20.50	787.58	787.60
℄ Brg. Pier	1061+45.39	20.50	787.55	787.57
N	1061+55.39	20.50	787.51	787.54
O	1061+65.39	20.50	787.46	787.51
P	1061+75.39	20.50	787.41	787.48
Q	1061+85.39	20.50	787.36	787.45
R	1061+95.39	20.50	787.30	787.42
S	1062+05.39	20.50	787.24	787.38
T	1062+15.39	20.50	787.18	787.33
U	1062+25.39	20.50	787.11	787.28
V	1062+35.39	20.50	787.04	787.20
W	1062+45.39	20.50	786.97	787.11
X	1062+55.39	20.50	786.89	787.01
Y	1062+65.39	20.50	786.81	786.90
Z	1062+75.39	20.50	786.73	786.78
℄ Brg. E. Abut.	1062+81.21	20.50	786.68	786.70
Bk. E. Abut.	1062+83.06	20.50	786.66	786.69

CROWN

Location	Station	Offset	Theoretical Grade Elevations	Theoretical Grade Elevations Adjusted For Dead Load Deflection and Grinding
Bk. W Abut.	1060+08.14	24.00	787.89	787.91
℄ Brg. W. Abut.	1060+09.98	24.00	787.89	787.91
A	1060+19.98	24.00	787.89	787.95
B	1060+29.98	24.00	787.89	787.99
C	1060+39.98	24.00	787.88	788.01
D	1060+49.98	24.00	787.87	788.02
E	1060+59.98	24.00	787.85	788.02
F	1060+69.98	24.00	787.84	788.00
G	1060+79.98	24.00	787.82	787.97
H	1060+89.98	24.00	787.79	787.93
I	1060+99.98	24.00	787.77	787.88
J	1061+09.98	24.00	787.74	787.82
K	1061+19.98	24.00	787.71	787.76
L	1061+29.98	24.00	787.67	787.71
M	1061+39.98	24.00	787.63	787.66
℄ Brg. Pier	1061+45.81	24.00	787.61	787.63
N	1061+55.81	24.00	787.56	787.59
O	1061+65.81	24.00	787.51	787.56
P	1061+75.81	24.00	787.46	787.53
Q	1061+85.81	24.00	787.41	787.50
R	1061+95.81	24.00	787.35	787.47
S	1062+05.81	24.00	787.29	787.43
T	1062+15.81	24.00	787.23	787.39
U	1062+25.81	24.00	787.16	787.33
V	1062+35.81	24.00	787.09	787.25
W	1062+45.81	24.00	787.02	787.16
X	1062+55.81	24.00	786.94	787.06
Y	1062+65.81	24.00	786.86	786.95
Z	1062+75.81	24.00	786.78	786.83
℄ Brg. E. Abut.	1062+81.63	24.00	786.73	786.75
Bk. E. Abut.	1062+83.47	24.00	786.72	786.74

STAGE CONSTRUCTION JOINT

Location	Station	Offset	Theoretical Grade Elevations	Theoretical Grade Elevations Adjusted For Dead Load Deflection and Grinding
Bk. W Abut.	1060+08.26	25.00	787.87	787.90
℄ Brg. W. Abut.	1060+10.10	25.00	787.87	787.90
A	1060+20.10	25.00	787.87	787.94
B	1060+30.10	25.00	787.87	787.97
C	1060+40.10	25.00	787.86	787.99
D	1060+50.10	25.00	787.85	788.01
E	1060+60.10	25.00	787.84	788.00
F	1060+70.10	25.00	787.82	787.98
G	1060+80.10	25.00	787.80	787.95
H	1060+90.10	25.00	787.78	787.91
I	1061+00.10	25.00	787.75	787.86
J	1061+10.10	25.00	787.72	787.80
K	1061+20.10	25.00	787.69	787.75
L	1061+30.10	25.00	787.65	787.69
M	1061+40.10	25.00	787.61	787.64
℄ Brg. Pier	1061+45.92	25.00	787.59	787.61
N	1061+55.92	25.00	787.55	787.57
O	1061+65.92	25.00	787.50	787.54
P	1061+75.92	25.00	787.45	787.51
Q	1061+85.92	25.00	787.39	787.49
R	1061+95.92	25.00	787.34	787.45
S	1062+05.92	25.00	787.28	787.42
T	1062+15.92	25.00	787.21	787.37
U	1062+25.92	25.00	787.15	787.31
V	1062+35.92	25.00	787.08	787.24
W	1062+45.92	25.00	787.00	787.15
X	1062+55.92	25.00	786.93	787.05
Y	1062+65.92	25.00	786.85	786.93
Z	1062+75.92	25.00	786.76	786.81
℄ Brg. E. Abut.	1062+81.75	25.00	786.71	786.74
Bk. E. Abut.	1062+83.59	25.00	786.70	786.72

GIRDER 16

Location	Station	Offset	Theoretical Grade Elevations	Theoretical Grade Elevations Adjusted For Dead Load Deflection and Grinding
Bk. W Abut.	1060+08.64	28.25	787.82	787.84
℄ Brg. W. Abut.	1060+10.49	28.25	787.82	787.84
A	1060+20.49	28.25	787.82	787.89
B	1060+30.49	28.25	787.82	787.92
C	1060+40.49	28.25	787.81	787.94
D	1060+50.49	28.25	787.80	787.95
E	1060+60.49	28.25	787.79	787.95
F	1060+70.49	28.25	787.77	787.93
G	1060+80.49	28.25	787.75	787.90
H	1060+90.49	28.25	787.73	787.86
I	1061+00.49	28.25	787.70	787.81
J	1061+10.49	28.25	787.67	787.75
K	1061+20.49	28.25	787.64	787.69
L	1061+30.49	28.25	787.60	787.64
M	1061+40.49	28.25	787.56	787.59
℄ Brg. Pier	1061+46.31	28.25	787.54	787.56
N	1061+56.31	28.25	787.49	787.52
O	1061+66.31	28.25	787.45	787.49
P	1061+76.31	28.25	787.39	787.46
Q	1061+86.31	28.25	787.34	787.43
R	1061+96.31	28.25	787.28	787.40
S	1062+06.31	28.25	787.22	787.36
T	1062+16.31	28.25	787.16	787.32
U	1062+26.31	28.25	787.09	787.26
V	1062+36.31	28.25	787.02	787.18
W	1062+46.31	28.25	786.95	787.09
X	1062+56.31	28.25	786.87	786.99
Y	1062+66.31	28.25	786.79	786.88
Z	1062+76.31	28.25	786.71	786.76
℄ Brg. E. Abut.	1062+82.13	28.25	786.66	786.68
Bk. E. Abut.	1062+83.98	28.25	786.64	786.67

GIRDER 17

Location	Station	Offset	Theoretical Grade Elevations	Theoretical Grade Elevations Adjusted For Dead Load Deflection and Grinding
Bk. W Abut.	1060+09.56	36.00	787.70	787.72
℄ Brg. W. Abut.	1060+11.41	36.00	787.70	787.72
A	1060+21.41	36.00	787.70	787.76
B	1060+31.41	36.00	787.70	787.80
C	1060+41.41	36.00	787.69	787.82
D	1060+51.41	36.00	787.68	787.83
E	1060+61.41	36.00	787.66	787.83
F	1060+71.41	36.00	787.65	787.81
G	1060+81.41	36.00	787.63	787.78
H	1060+91.41	36.00	787.60	787.74
I	1061+01.41	36.00	787.58	787.68
J	1061+11.41	36.00	787.55	787.63
K	1061+21.41	36.00	787.51	787.57
L	1061+31.41	36.00	787.48	787.51
M	1061+41.41	36.00	787.44	787.46
℄ Brg. Pier	1061+47.23	36.00	787.41	787.43
N	1061+57.23	36.00	787.37	787.40
O	1061+67.23	36.00	787.32	787.36
P	1061+77.23	36.00	787.27	787.34
Q	1061+87.23	36.00	787.21	787.31
R	1061+97.23	36.00	787.16	787.28
S	1062+07.23	36.00	787.10	787.24
T	1062+17.23	36.00	787.03	787.19
U	1062+27.23	36.00	786.96	787.13
V	1062+37.23	36.00	786.89	787.05
W	1062+47.23	36.00	786.82	786.97
X	1062+57.23	36.00	786.74	786.87
Y	1062+67.23	36.00	786.66	786.75
Z	1062+77.23	36.00	786.58	786.63
℄ Brg. E. Abut.	1062+83.05	36.00	786.53	786.55
Bk. E. Abut.	1062+84.89	36.00	786.52	786.54

GIRDER 18

Location	Station	Offset	Theoretical Grade Elevations	Theoretical Grade Elevations Adjusted For Dead Load Deflection and Grinding
Bk. W Abut.	1060+10.48	43.75	787.54	787.56
℄ Brg. W. Abut.	1060+12.32	43.75	787.54	787.56
A	1060+22.32	43.75	787.54	787.61
B	1060+32.32	43.75	787.54	787.65
C	1060+42.32	43.75	787.53	787.68
D	1060+52.32	43.75	787.52	787.69
E	1060+62.32	43.75	787.50	787.69
F	1060+72.32	43.75	787.48	787.67
G	1060+82.32	43.75	787.46	787.64
H	1060+92.32	43.75	787.44	787.59
I	1061+02.32	43.75	787.41	787.54
J	1061+12.32	43.75	787.38	787.48
K	1061+22.32	43.75	787.35	787.42
L	1061+32.32	43.75	787.31	787.35
M	1061+42.32	43.75	787.27	787.30
℄ Brg. Pier	1061+48.14	43.75	787.25	787.27
N	1061+58.14	43.75	787.20	787.23
O	1061+68.14	43.75	787.15	787.19
P	1061+78.14	43.75	787.10	787.16
Q	1061+88.14	43.75	787.05	787.13
R	1061+98.14	43.75	786.99	787.10
S	1062+08.14	43.75	786.93	787.06
T	1062+18.14	43.75	786.86	787.01
U	1062+28.14	43.75	786.80	786.95
V	1062+38.14	43.75	786.73	786.88
W	1062+48.14	43.75	786.65	786.79
X	1062+58.14	43.75	786.58	786.69
Y	1062+68.14	43.75	786.50	786.58
Z	1062+78.14	43.75	786.41	786.46
℄ Brg. E. Abut.	1062+83.97	43.75	786.36	786.38
Bk. E. Abut.	1062+85.81	43.75	786.35	786.37

GIRDER 19

Location	Station	Offset	Theoretical Grade Elevations	Theoretical Grade Elevations Adjusted For Dead Load Deflection and Grinding
Bk. W Abut.	1060+11.33	50.92	787.39	787.41
℄ Brg. W. Abut.	1060+13.17	50.90	787.39	787.41
A	1060+23.17	50.80	787.39	787.46
B	1060+33.17	50.70	787.39	787.50
C	1060+43.17	50.60	787.38	787.53
D	1060+53.17	50.50	787.37	787.55
E	1060+63.17	50.40	787.36	787.55
F	1060+73.17	50.30	787.35	787.53
G	1060+83.17	50.20	787.33	787.50
H	1060+93.17	50.10	787.30	787.46
I	1061+03.17	50.00	787.28	787.41
J	1061+13.16	49.90	787.25	787.35
K	1061+23.16	49.80	787.22	787.29
L	1061+33.16	49.70	787.18	787.23
M	1061+43.16	49.60	787.15	787.18
℄ Brg. Pier	1061+48.83	49.54	787.12	787.14
N	1061+58.83	49.44	787.08	787.10
O	1061+68.83	49.34	787.03	787.06
P	1061+78.83	49.24	786.98	787.03
Q	1061+88.83	49.14	786.93	786.99
R	1061+98.83	49.04	786.88	786.96
S	1062+08.83	48.94	786.82	786.91
T	1062+18.83	48.84	786.75	786.87
U	1062+28.83	48.74	786.69	786.81
V	1062+38.83	48.64	786.62	786.74
W	1062+48.83	48.54	786.55	786.65
X	1062+58.83	48.44	786.47	786.56
Y	1062+68.82	48.34	786.39	786.46
Z	1062+78.82	48.24	786.31	786.35
℄ Brg. E. Abut.	1062+84.49	48.19	786.27	786.29
Bk. E. Abut.	1062+86.34	48.17	786.25	786.27