CONTRACT NO. 93544

F.A.U. RTE.	SECTION	COUNTY	TOTAL SHEETS	SHEET NO.
7982	*	SANGAMON	63	46
STA.		TO STA.		
FED. ROAD DIST. NO.	ILLINOIS	FED. AID PROJECT		

* 10-00447-04-PV CITY OF SPRINGFIELD

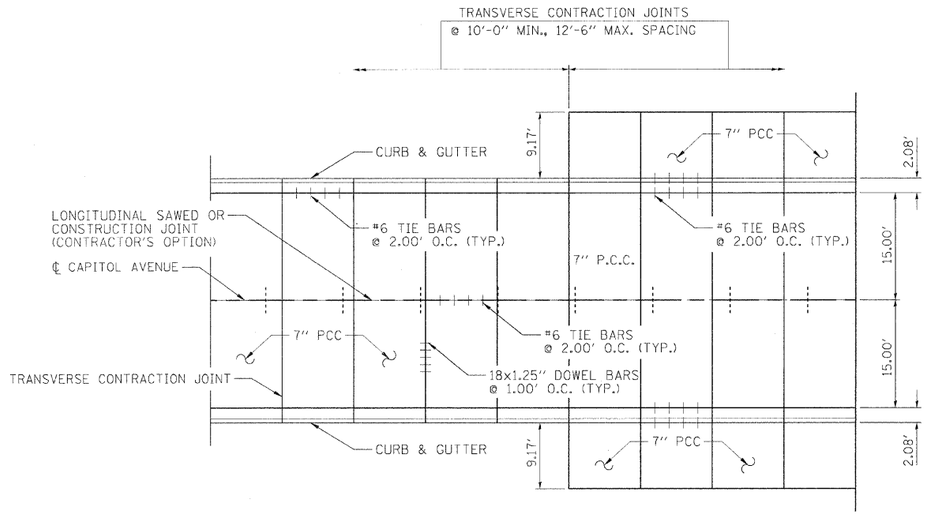

TYPICAL PAVEMENT JOINT LAYOUT

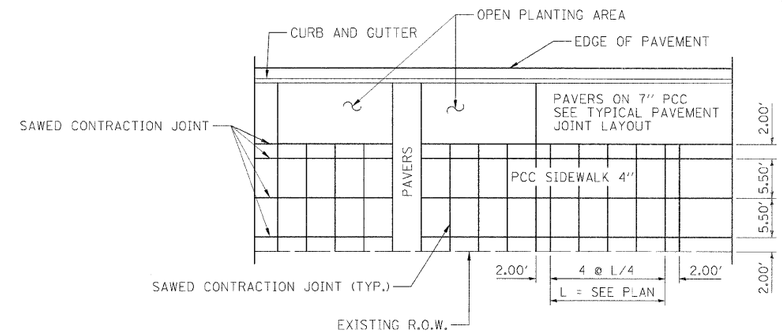

TYPICAL SIDEWALK JOINT LAYOUT

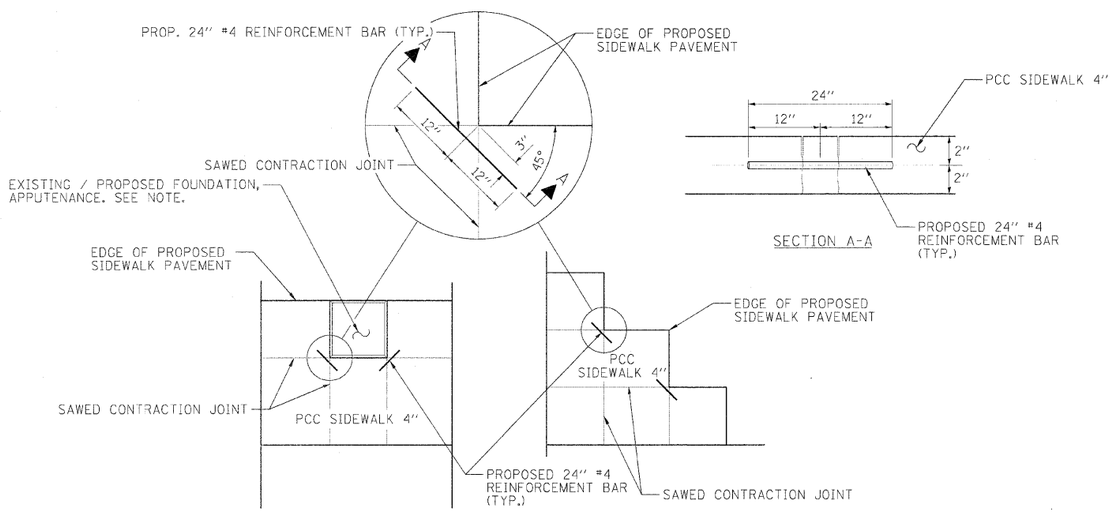

SIDEWALK REINFORCEMENT DETAIL

SECTION A-A

NOTE:
REINFORCEMENT BAR SHALL BE PLACED IN PROPOSED SIDEWALK AT SIMILAR LOCATIONS ADJACENT TO EXISTING AND PROPOSED FOUNDATIONS, GRADE BEAMS, RETAINING WALLS, UTILITIES AND OTHER EXISTING APPURTENANCES OR AS DIRECTED BY THE ENGINEER.

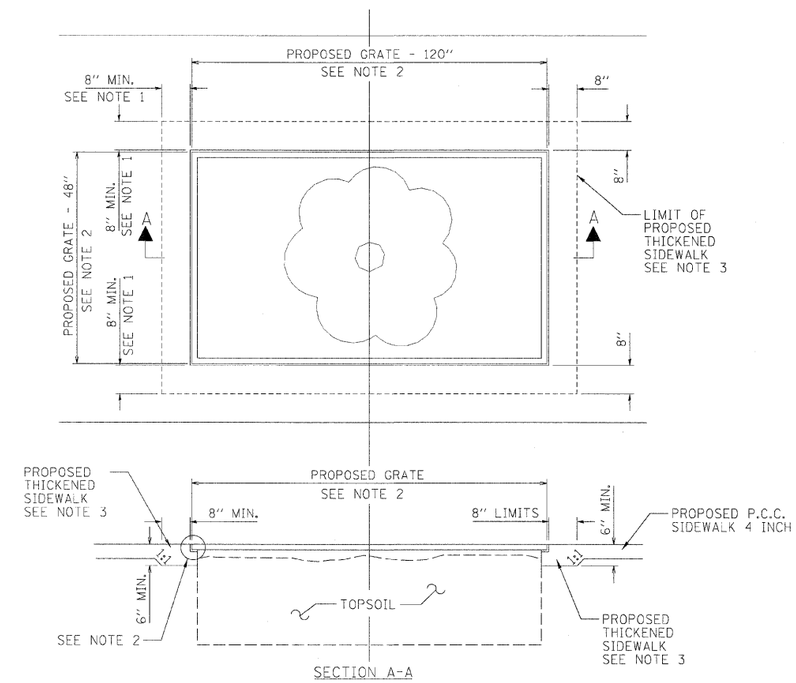

SECTION A-A

TREE GRATE INSTALLATION DETAILS

NOTES:

1. DIMENSIONS SHOWN FOR THE PROPOSED P.C.C. CONCRETE COLLAR ARE MINIMUMS AND CAN BE EXTENDED TO THE NEAREST EXISTING PAVEMENT JOINT AS DIRECTED BY THE ENGINEER.

2. MANUFACTURER'S INSTALLATION INSTRUCTIONS SHOULD BE FOLLOWED FOR PROPOSED TREE FRAME AND GRATE. SEE DIMENSIONS IN PLANS

3. THICKENED SIDEWALK INCLUDED IN THE COST OF P.C.C. SIDEWALK 4 INCH.

10 0 10 20

REVISIONS	
NAME	DATE

ILLINOIS DEPARTMENT OF TRANSPORTATION

PAVEMENT & SIDEWALK JOINT DETAILS

FAU RTE 7982 CAPITOL AVE
SEC NO. 10-00447-04-PV
SANGAMON COUNTY, ILLINOIS

SCALE: VERT. HORIZ.
DATE 11/19/10
DRAWN BY RSJ
CHECKED BY MH

LAYOUT	DAP	03/14/07
DRAWN	DAP	03/14/07
REVIEWED	MH	09/19/07

PLOT DATE = 01\03\2011
FILE NAME = I:\R2\jobs\R252841A\CADD\Road\Microstation\Sheets\Section_3-11th - 18th\C-601PSJD.dgn
PLOT SCALE = 10.0000 ' / in.
USER NAME = JohnsA2944

© Copyright Hanson Professional Services Inc. 2011

HANSON