INTERIOR GIRDER MOMENT TABLE				
		0.4 Sp. 1 or 0.6 Sp. 3	Pier 1 or 2	0.5 Sp. 2
I_s	(in^4)	1830	1830	1830
$I_c(n)$	(in^4)	6314	-	6314
$I_c(3n)$	(in^4)	4770	-	4770
S_s	(in^3)	154	154	154
$S_c(n)$	(in^3)	258	-	258
$S_c(3n)$	(in^3)	233	-	233
Z	(in^3)	-	177	-
DC1	(k/')	0.69	0.69	0.69
M_{DC1}	('k)	60	110	57
DC2	(k/')	0.150	0.150	0.15
M_{DC2}	('k)	16	19	18
DW	(k/')	0.3	0.3	0.30
M_{DW}	('k)	30	38	35
M_{LL+IM}	('k)	337	184	365
M_u (Strength I)	('k)	730	540	785
* $\phi_f M_n$, $\phi_f M_{nc}$	('k)	1326	616	1328
f_s DC1	(ksi)	4.7	8.6	4.4
f_s DC2	(ksi)	0.8	1.5	0.9
f_s DW	(ksi)	1.5	3.0	1.8
f_s 1.3(LL+IM)	(ksi)	20.4	18.6	22.1
f_s (Service II)	(ksi)	27.4	31.7	29.2
V_f	(k)	34.6	-	34.6

* Compact sections

INTERIOR GIRDER REACTION TABLE			
		Abut.	Pier 1 or 2
R_{DC1}	(k)	9.1	30.4
R_{DC2}	(k)	2.1	6.5
R_{DW}	(k)	4.2	12.8
R_{LL+IM}	(k)	52.2	75.6
R_{Total}	(k)	67.6	125.3

I_s, S_s: Non-composite moment of inertia and section modulus of the steel section used for computing f_s (Total-Strength I, and Service II) due to non-composite dead loads ($in.^4$ and $in.^3$).

$I_c(n)$, $S_c(n)$: Composite moment of inertia and section modulus of the steel and deck based upon the modular ratio, "n", used for computing f_s (Total-Strength I, and Service II) due to short-term composite live loads ($in.^4$ and $in.^3$).

$I_c(3n)$, $S_c(3n)$: Composite moment of inertia and section modulus of the steel and deck based upon 3 times the modular ratio, "3n", used for computing f_s (Total-Strength I, and Service II) due to long-term composite (superimposed) dead loads ($in.^4$ and $in.^3$).

Z: Plastic Section Modulus of the steel section in non-composite areas.

DC1: Un-factored non-composite dead load (kips/ft.).

M_{DC1}: Un-factored moment due to non-composite dead load (kip-ft.).

DC2: Un-factored long-term composite (superimposed excluding future wearing surface) dead load (kips/ft.).

M_{DC2}: Un-factored moment due to long-term composite (superimposed excluding future wearing surface) dead load (kip-ft.).

DW: Un-factored long-term composite (superimposed future wearing surface only) dead load (kips/ft.).

M_{DW}: Un-factored moment due to long-term composite (superimposed future wearing surface only) dead load (kip-ft.).

M_{LL+IM}: Un-factored live load moment plus dynamic load allowance (impact) (kip-ft.).

M_u (Strength I): Factored design moment (kip-ft.).
$1.25\ (M_{DC1} + M_{DC2}) + 1.5\ M_{DW} + 1.75\ M_{LL+IM}$

$\phi_f M_n$: Compact composite positive moment capacity computed according to Article 6.10.7.1 (kip-ft.).

$\phi_f M_{nc}$: Compact non-composite negative moment capacity computed according to Article A6.1.1 (kip-ft.).

f_s (Service II): Sum of stresses as computed from the moments below (ksi).
$M_{DC1} + M_{DC2} + M_{DW} + 1.3\ M_{LL+IM}$

f_s (Total)(Strength I): Sum of stresses as computed from the moments below on non-compact section (ksi).
$1.25\ (M_{DC1} + M_{DC2}) + 1.5\ M_{DW} + 1.75\ M_{LL+IM}$

V_f: Maximum factored shear range in composite portion of span computed according to Article 6.10.10.

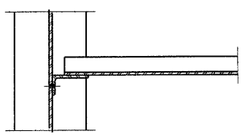

SECTION A-A

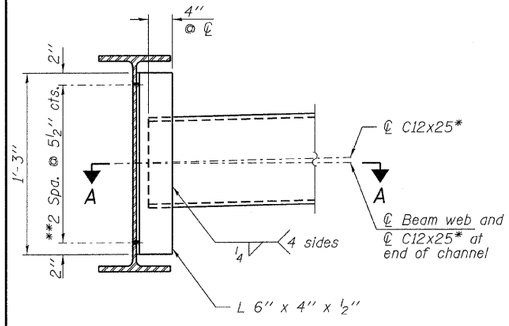

INTERIOR DIAPHRAGM D
(20 Required)

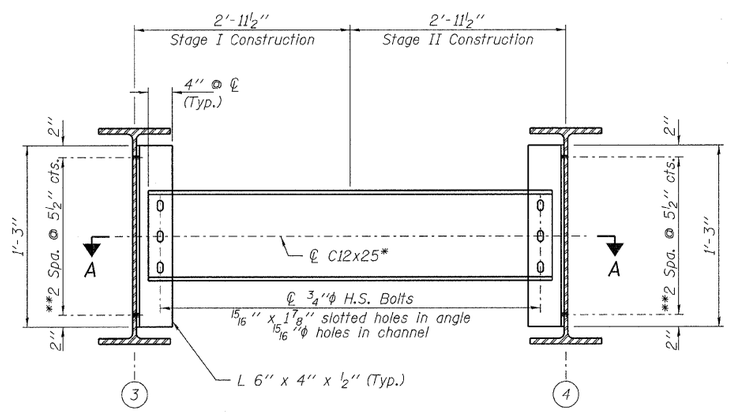

INTERIOR DIAPHRAGM D1
(5 Required)

Notes:
Two hardened washers required for each set of oversized holes.
*Alternate channels (C12X30) are permitted to facilitate material acquisition. Calculated weight of structural steel is based on the lighter section. The alternate, if utilized, shall be provided at no additional cost to the Department.
**¾" ϕ HS bolts, 15/16" ϕ holes.
Bolts in slots shall be finger tight until the second stage pour is complete and fully tightened after completion of the deck pour for Stage II Construction. Position slots so bolts start at the end with no concrete load and finish near the opposite end under deck load, allowing maximum displacement without laterally stressing main members.

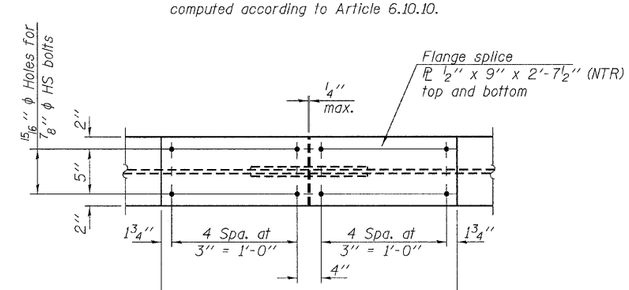

PLAN
(Typ. Top & Bott. Flange)

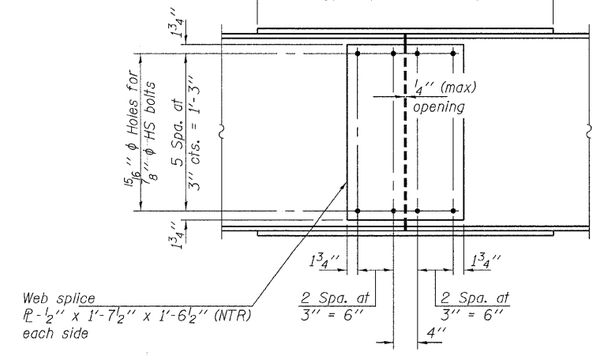

ELEVATION

SPLICE DETAIL
(6 Required)

FILE NAME = 290116-sht-bridge.dgn	USER NAME =	DESIGNED - S.M.S.	REVISED - 10/14/10	STATE OF ILLINOIS DEPARTMENT OF TRANSPORTATION	STRUCTURAL STEEL DETAILS STRUCTURE NO. 097-0075	FAP	SECTION	COUNTY	TOTAL SHEETS	SHEET NO.
HAMPTON, LENZINI AND RENWICK, INC. 3005 STEVENSON DRIVE, SUITE 201 SPRINGFIELD, ILLINOIS 62703	PLOT SCALE =	CHECKED - A.S.L.	REVISED - 12/10/10			328	105B-2	WHITE	55	37
ILLINOIS PROFESSIONAL DESIGN FIRM LS / PE / SE CORP. 184.003959	PLOT DATE = 1/5/2011	DRAWN - D.A.B.	REVISED -		SHEET NO. 16 OF 24 SHEETS			CONTRACT NO. 78188		
		CHECKED - M.D.C.	REVISED -					ILLINOIS FED. AID PROJECT		