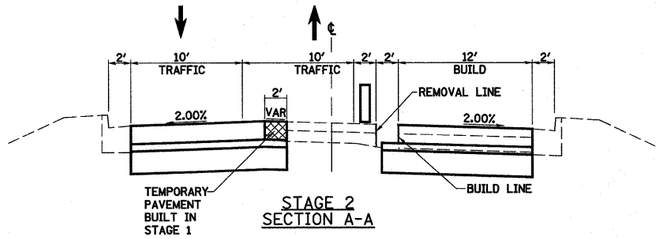

STAGE 2
SECTION A-A

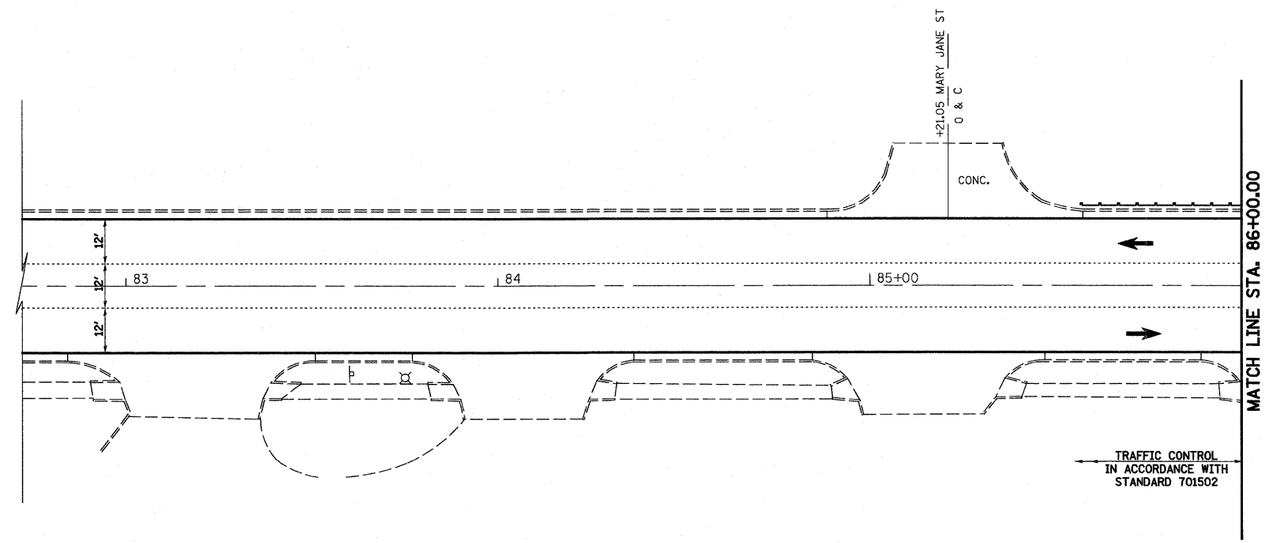

LEGEND

- WORK AREA THIS STAGE
- TEMPORARY PAVEMENT (INCIDENTAL HMA SURFACING)
- TYPE I OR II BARRICADE WITH FLASHING LIGHT
- DRUM OR BARRICADE
- SIGN ON PORTABLE OR PERMANENT SUPPORT
- TYPE III BARRICADE
- DIRECTION OF TRAFFIC

GENERAL STAGING NOTES:

1. SEE SPECIAL PROVISIONS FOR REQUIREMENTS FOR MAINTAINING ACCESS TO ENTRANCES, ALLEYS AND SIDEROADS. PAVING BLOCKOUTS AT SIDEROADS SHALL BE UTILIZED TO MAINTAIN TRAFFIC FOR STAGE CONSTRUCTION.
2. THE REMOVAL OF ANY TEMPORARY PAVEMENT DURING STAGE CONSTRUCTION SHALL BE INCLUDED IN THE COST OF INCIDENTAL HMA SURFACING.

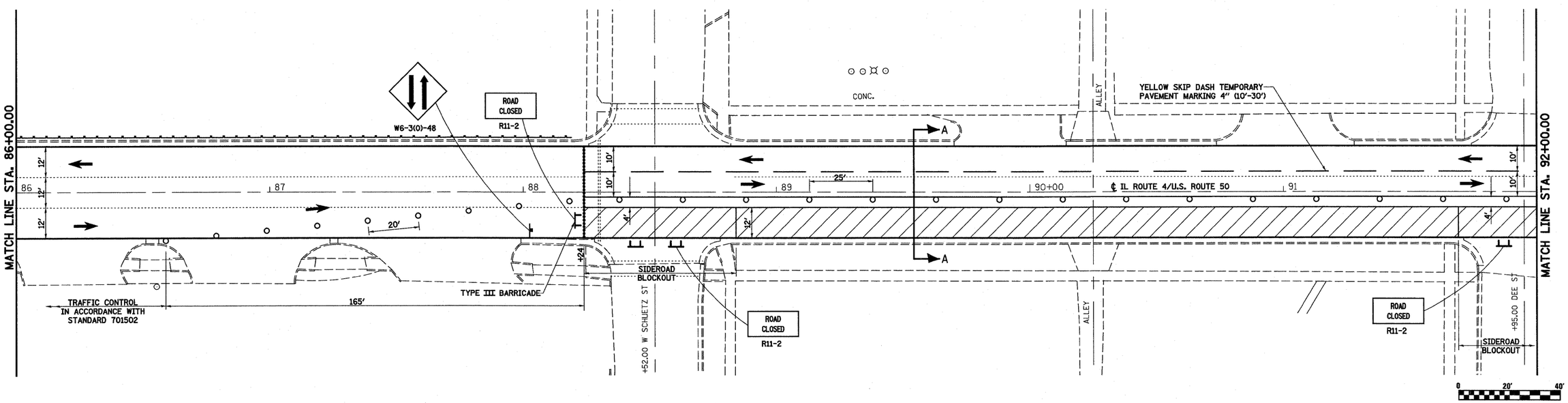

FILE NAME = S:\Projects\409-0028-9HY IL 4 Lebanon 3P\dgn\CADD Sheets\D876E25-sht-staging_2.dgn	USER NAME = paul	DESIGNED - ESW	REVISED -
		DRAWN - PDB	REVISED -
	PLOT SCALE = 40.0000 ' / IN.	CHECKED - BRM	REVISED -
	PLOT DATE = 2/4/2011	DATE - 11-1-10	REVISED -

STATE OF ILLINOIS
DEPARTMENT OF TRANSPORTATION

STAGE CONSTRUCTION DETAILS
STAGE 2, IL ROUTE 4

SCALE: 1"=20' | SHEET NO. 3 OF 6 SHEETS | STA. | TO STA.

F.A.P RTE.	SECTION	COUNTY	TOTAL SHEETS	SHEET NO.
314	(110, 111)RS-4	MADISON & ST. CLAIR	58	15
		CONTRACT NO. 76E29		
FED. ROAD DIST. NO.	ILLINOIS	FED. AID PROJECT		