SCHEDULE OF QUANTITIES

STATION	DIMENSIONS X	DIMENSIONS Y	U Bar No.	U Bar Length	h Bar No.	CONCRETE COLLAR Cu. Yd	REINF. BARS LBS	EXP. BOLTS No.
STA. 575+80 (RT)	4'-8"	2'-2"	4	9'-0"	12	1.02	42.9	
STA. 576+07.15 (LT)	2'-8"	11"	4	4'-6"	8	0.82	24.7	
All h Bars 450 (18) Long					Total	1.84	67.6	

General Notes

CONCRETE COLLARS SHALL BE CONSTRUCTED OF CLASS SI CONCRETE IN ACCORDANCE WITH SECTION 503 OF THE STANDARD SPECIFICATIONS.

REINFORCEMENT BARS SHALL CONFORM TO SECTION 508 OF THE STANDARD SPECIFICATIONS.

THE CONCRETE WILL BE PAID FOR AT THE CONTRACT UNIT PRICE PER CUBIC YARD FOR CONCRETE COLLAR. REINFORCEMENT WILL BE PAID FOR AT THE CONTRACT UNIT PRICE PER POUND FOR REINFORCEMENT BARS. EXPANSION BOLTS, WHEN REQUIRED, WILL BE PAID FOR AT THE CONTRACT UNIT PRICE EACH FOR EXPANSION BOLTS OF THE SIZE INDICATED, WHICH PRICE SHALL INCLUDE FURNISHING, DRILLING HOLES, AND INSTALLING THE EXPANSION BOLTS COMPLETE IN PLACE. THESE BOLTS SHALL EXTEND AT LEAST 8 INCHES INTO THE NEW CONCRETE.

ONCE THE CONSTRUCTION OF THE PRECAST REINFORCED CONCRETE FLARED END SECTIONS ARE COMPLETED, BACK FILL IS REQUIRED AROUND THE END SECTIONS TO HAVE CONSISTENT GRADE WHICH MATCHES THE SURROUNDING CONDITIONS. THIS WORK SHALL BE APPROVED BY THE ENGINEER.

THE CONTRACTOR MAY BE REQUIRED TO REMOVE BRUSH AND TREES TO CONSTRUCT THE P.R.C.F.E.S EXTENSIONS. THE PRICE SHALL BE INCLUDED IN THE PRICE PER EACH FOR PRECAST REINFORCED CONCRETE FLARED END SECTIONS OF THE TYPE SPECIFIED.

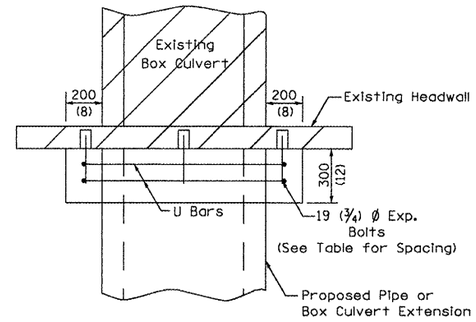

PLAN OF CULVERT WITH STRAIGHT HEADWALL

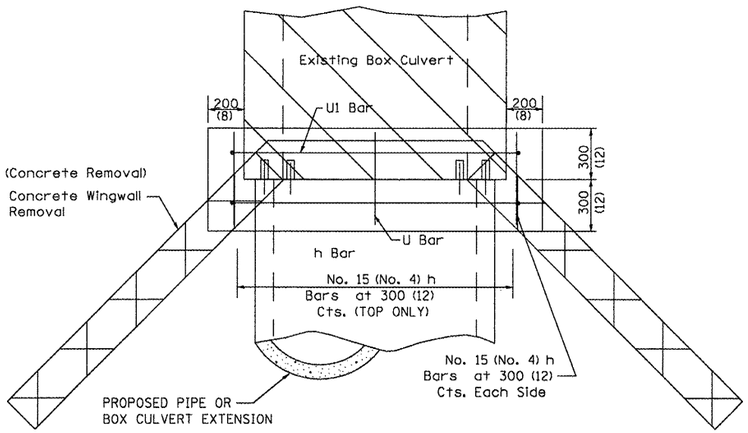

PLAN OF CULVERT WITH ANGLED WING WALLS

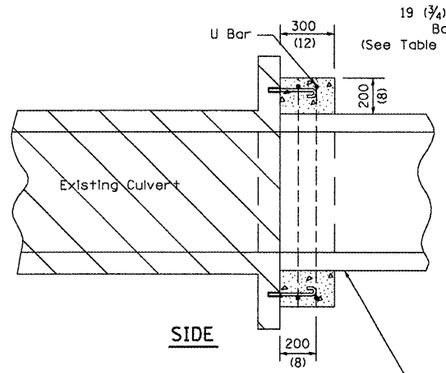

SIDE

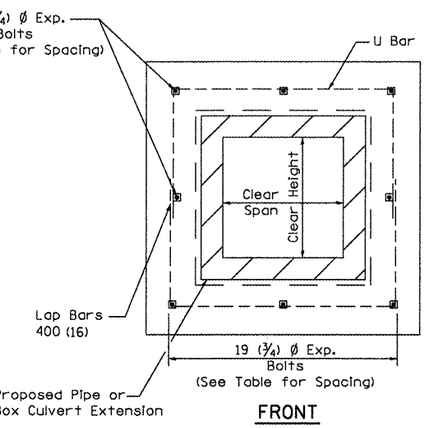

FRONT

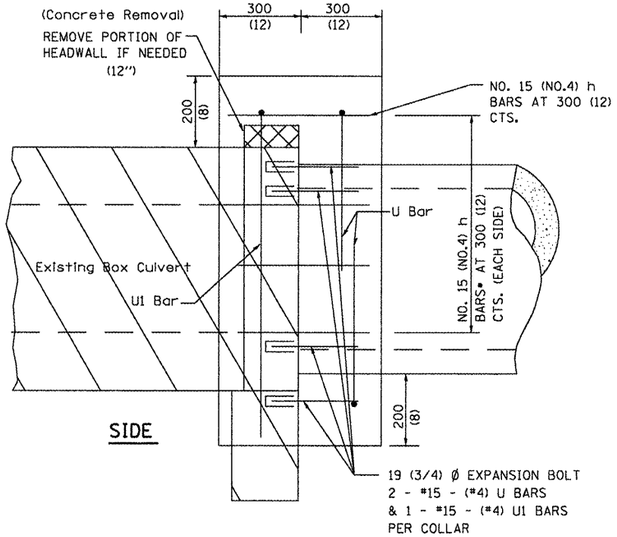

SIDE

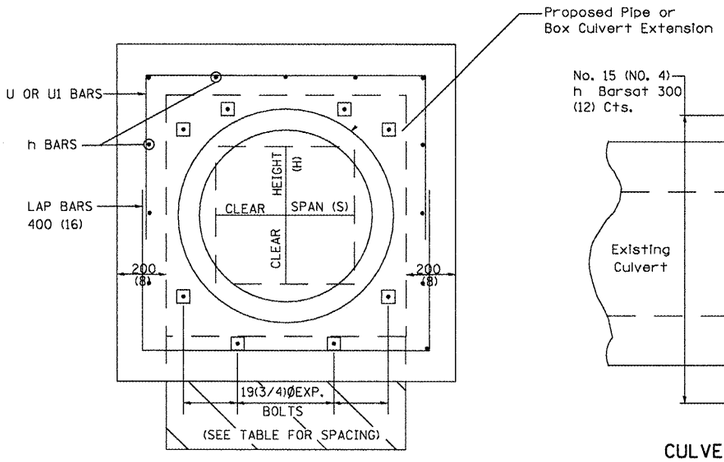

FRONT

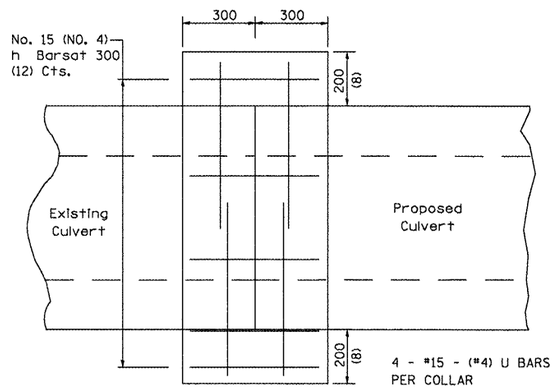

CULVERT CONNECTION WITHOUT EXISTING HEADWALL

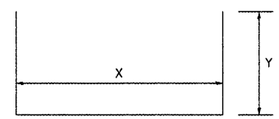

(#4) U BAR

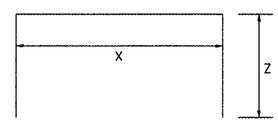

(#4) U1 BAR

PLACEMENT DETAILS FOR EXPANSION BOLTS

H OR S	NUMBER OF EXPANSION BOLTS REQUIRED PER SIDE: EXTENSIONS < 4.57m (15') NUMBER	EXTENSIONS < 4.57m (15') SPACING	EXTENSIONS > 4.57m (15') NUMBER	EXTENSIONS > 4.57m (15') SPACING
600 (24)	*		*	
750 (30)	2	450 (18)	2	450 (18)
900 (36)	2	600 (24)	2	600 (24)
1200 (48)	3	450 (18)	3	450 (18)
1500 (60)	4	400 (16)	3	600 (24)
1800 (72)	5	375 (15)	4	500 (20)
2100 (84)	5	450 (18)	4	600 (24)
2400 (96)	6	375 (15)	5	525 (21)
2700 (108)	6	475 (19)	5	600 (24)
3000 (120)	7	450 (18)	6	525 (21)
3300 (132)	8	425 (17)	6	600 (24)
3600 (144)	8	475 (19)	7	550 (22)

* MINIMUM ONE PER SIDE

FILE NAME = $FILEL$	USER NAME = $USER$	DESIGNED - ___	REVISED - ___
		DRAWN - ___	REVISED - ___
	PLOT SCALE = $SCALE$	CHECKED - ___	REVISED - ___
	PLOT DATE = $DATE$	DATE - _____	REVISED - ___

STATE OF ILLINOIS
DEPARTMENT OF TRANSPORTATION

CONCRETE COLLAR DETAIL

SCALE: _____ | SHEET NO. 24 OF 27 SHEETS | STA. _____ TO STA. _____

F.A.P. RTE.	SECTION	COUNTY	TOTAL SHEETS	SHEET NO.
322	(24,25)RS-3	MARION	27	24

CONTRACT NO. 76B76

FED. ROAD DIST. NO. _ | ILLINOIS | FED. AID PROJECT