STATE OF ILLINOIS
DEPARTMENT OF TRANSPORTATION

INTERIOR GIRDER MOMENT TABLE								
		0.4 Span 1	Pier 1	0.5 Span 2	Pier 2	0.5 Span 3	Pier 3	0.6 Span 4
I_s	(in^4)	112,600	226,601	131,574	642,292	223,067	642,292	117,465
$I_c(n)$	(in^4)	219,129	-	242,323	-	376,536	-	220,365
$I_c(3n)$	(in^4)	163,113	-	182,900	-	288,895	-	165,961
S_s	(in^3)	2,854	5,460	3,326	10,277	6,011	10,277	2,900
$S_c(n)$	(in^3)	3,664	-	4,124	-	6,995	-	3,666
$S_c(3n)$	(in^3)	3,320	-	3,774	-	6,523	-	3,336
DC1	(k/')	1.312	1.532	1.353	1.716	1.547	1.716	1.322
M_{DC1}	('k)	2,902	6,196	1,619	13,990	7,174	14,906	2,026
DC2	(k/')	0.191	0.191	0.191	0.191	0.191	0.191	0.191
M_{DC2}	('k)	444	780	364	1,603	985	1,645	419
DW	(k/')	0.371	0.371	0.371	0.371	0.371	0.371	0.371
M_{DW}	('k)	866	1,520	710	3,121	1,919	3,204	817
M_{LL+IM}	('k)	3,943	4,583	4,338	6,906	6,388	6,827	4,428
M_u (Strength I)	('k)	12,381	19,019	11,135	36,258	24,256	37,442	12,030
* $\phi_f M_n$, $\phi_f M_{nc}$	('k)	18,242	-	20,091	-	27,804	-	18,684
f_s DC1	(ksi)	12.20	13.62	5.84	16.34	14.32	17.41	8.38
f_s DC2	(ksi)	1.60	1.71	1.16	1.87	1.81	1.92	1.51
f_s DW	(ksi)	3.13	3.34	2.26	3.64	3.53	3.74	2.94
f_s 1.3(LL+IM)	(ksi)	16.79	13.09	16.41	10.48	14.25	10.36	18.84
f_s (Service II)	(ksi)	33.72	31.76	25.66	32.34	33.91	33.43	31.67
** f_s (Total)(Strength I)	(ksi)	-	41.80	-	42.34	-	43.72	-
V_f	(k)	38.8	-	38.6	-	41.1	-	38.5

* Compact sections
** Non-Compact and slender sections

INTERIOR GIRDER REACTION TABLE						
		N. Abut.	Pier 1	Pier 2	Pier 3	S. Abut.
R_{DC1}	(k)	89.5	323.3	489.3	505.2	82.2
R_{DC2}	(k)	13.1	42.8	59.0	60.0	13.1
R_{DW}	(k)	25.5	83.3	115.0	116.8	25.6
R_{LL+IM}	(k)	196.5	362.4	402.9	400.7	199.2
R_{Total}	(k)	324.6	811.8	1066.2	1082.8	320.1

I_s, S_s: Non-composite moment of inertia and section modulus of the steel section used for computing f_s (Total-Strength I, and Service II) due to non-composite dead loads (in^4 and in^3).
$I_c(n)$, $S_c(n)$: Composite moment of inertia and section modulus of the steel and deck based upon the modular ratio, "n", used for computing f_s (Total-Strength I, and Service II) due to short-term composite live loads (in^4 and in^3).
$I_c(3n)$, $S_c(3n)$: Composite moment of inertia and section modulus of the steel and deck based upon 3 times the modular ratio, "3n", used for computing f_s (Total-Strength I, and Service II) due to long-term composite (superimposed) dead loads (in^4 and in^3).
DC1: Un-factored non-composite dead load (kips/ft.).
M_{DC1}: Un-factored moment due to non-composite dead load (kip-ft.).
DC2: Un-factored long-term composite (superimposed excluding future wearing surface) dead load (kips/ft.).
M_{DC2}: Un-factored moment due to long-term composite (superimposed excluding future wearing surface) dead load (kip-ft.).
DW: Un-factored long-term composite (superimposed future wearing surface only) dead load (kips/ft.).
M_{DW}: Un-factored moment due to long-term composite (superimposed future wearing surface only) dead load (kip-ft.).
M_{LL+IM}: Un-factored live load moment plus dynamic load allowance (impact) (kip-ft.).
M_u (Strength I): Factored design moment (kip-ft.).
$1.25\ (M_{DC1} + M_{DC2}) + 1.5\ M_{DW} + 1.75\ M_{LL+IM}$
$\phi_f M_n$: Compact composite positive moment capacity computed according to Article 6.10.7.1 (kip-ft.).
$\phi_f M_{nc}$: Compact non-composite negative moment capacity computed according to Article A6.1.1 (kip-ft.).
f_s (Service II): Sum of stresses as computed from the moments below (ksi).
$M_{DC1} + M_{DC2} + M_{DW} + 1.3\ M_{LL+IM}$
f_s (Total)(Strength I): Sum of stresses as computed from the moments below on non-compact section (ksi).
$1.25\ (M_{DC1} + M_{DC2}) + 1.5\ M_{DW} + 1.75\ M_{LL+IM}$
V_f: Maximum factored shear range in composite portion of span computed according to Article 6.10.10.

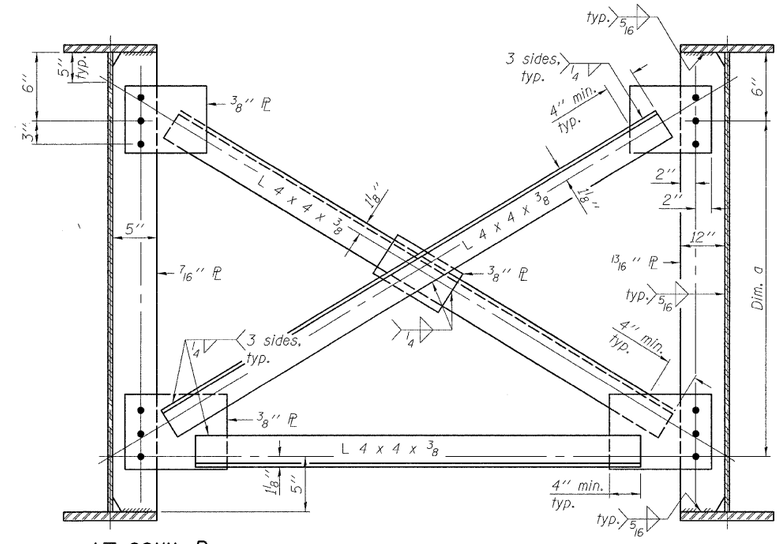

AT CONN. PL

AT INTERMEDIATE STIFFENER

CROSS FRAME F_1 THRU F_3
(228-F_1 required)
(24-F_2 required)
(24-F_3 required)

TABLE OF VARIABLE DIMENSIONS

Cross Frame	Dim. a
F_1	5'-7"
F_2	6'-3 13/16"
F_3	7'-9 9/16"

***TOP OF WEB ELEVATIONS

Location	℄ Brg. N. Abut.	℄ Splice 1	℄ Pier 1	℄ Splice 2	℄ Splice 3	℄ Pier 2	℄ Splice 4	℄ Splice 5	℄ Splice 6	℄ Splice 7	℄ Pier 3	℄ Splice 8	℄ Splice 9	℄ Brg. S. Abut.
Beam 1	447.00	451.91	453.34	454.76	457.26	458.22	459.18	459.61	459.06	458.37	456.87	455.53	455.19	451.54
Beam 2	447.18	452.09	453.52	454.94	457.45	458.40	459.36	459.79	459.24	458.56	457.05	455.72	455.37	451.72
Beam 3	447.36	452.27	453.70	455.13	457.63	458.59	459.54	459.97	459.42	458.74	457.23	455.90	455.55	451.90
Beam 4	447.54	452.45	453.88	455.31	457.81	458.77	459.72	460.15	459.60	458.92	457.41	456.08	455.73	452.08
Beam 5	447.36	452.27	453.70	455.13	457.63	458.59	459.54	459.97	459.42	458.74	457.23	455.90	455.55	451.90
Beam 6	447.18	452.09	453.52	454.94	457.45	458.40	459.36	459.79	459.24	458.56	457.05	455.72	455.37	451.72
Beam 7	447.00	451.91	453.34	454.76	457.26	458.22	459.18	459.61	459.06	458.37	456.87	455.53	455.19	451.54

***For Fabrication only.

INTERIOR GIRDER DISTRIBUTION FACTOR TABLE								
		0.4 Span 1	Pier 1	0.5 Span 2	Pier 2	0.5 Span 3	Pier 3	0.6 Span 4
Pos. Moment	(lanes)	0.683	-	0.663	-	0.628	-	0.657
Neg. Moment	(lanes)	0.561	0.678	0.560	0.653	0.551	0.656	0.577
Shear	(lanes)	1.504	1.352	1.458	1.271	1.306	1.285	1.643
**** Single Lane/Fatigue Pos. Moment	(lanes)	0.391	-	0.389	-	0.373	-	0.386
**** Single Lane/Fatigue Neg. Moment	(lanes)	0.310	0.343	0.310	0.340	0.307	0.340	0.316
**** Single Lane/Fatigue Shear	(lanes)	0.872	0.764	0.819	0.772	0.762	0.770	0.878

EXTERIOR GIRDER DISTRIBUTION FACTOR TABLE								
		0.4 Span 1	Pier 1	0.5 Span 2	Pier 2	0.5 Span 3	Pier 3	0.6 Span 4
Pos. Moment	(lanes)	0.689	-	0.692	-	0.686	-	0.690
Neg. Moment	(lanes)	0.694	0.713	0.698	0.715	0.701	0.718	0.689
Shear	(lanes)	0.914	0.868	0.885	0.814	0.823	0.815	0.976
**** Single Lane/Fatigue Pos. Moment	(lanes)	0.542	-	0.523	-	0.497	-	0.510
**** Single Lane/Fatigue Neg. Moment	(lanes)	0.432	0.527	0.414	0.525	0.395	0.519	0.412
**** Single Lane/Fatigue Shear	(lanes)	0.885	0.775	0.823	0.773	0.794	0.769	0.874

**** These distribution factors do not include the single lane multiple presence factor. If used for other than fatigue analysis, the multiple presence factor must be included.

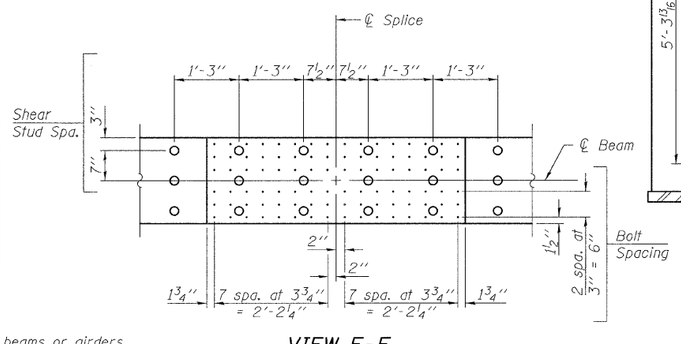

VIEW E-E

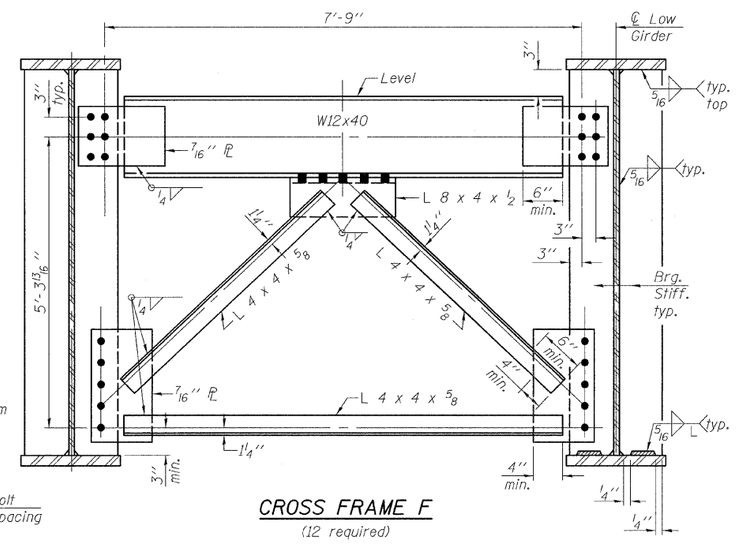

CROSS FRAME F
(12 required)

STRUCTURAL STEEL DETAILS
STRUCTURE NO. 082-0038

DESIGNED	EML/KAK
CHECKED	KAK/JJD
DRAWN	AJF/KAK
CHECKED	JJD

Notes:
All cross frames or diaphragms between beams or girders shall be installed with erection pins and bolts in accordance with the erection plan approved by the Engineer. Individual cross frames or diaphragms at supports may be temporarily disconnected to install bearing anchor rods.
All bolts in cross frames shall be 7/8" ϕ in 1 1/16" ϕ holes.
Two hardened washers shall be required for each set of oversized holes.

HORNER & SHIFRIN, INC.
ENGINEERS

SHEET NO. 31	F.A.P. RTE.	SECTION	COUNTY	TOTAL SHEETS	SHEET NO.
48 SHEETS	312	64-1VBR	ST. CLAIR	259	83
			CONTRACT NO. 76882		
		ILLINOIS	FED. AID PROJECT		