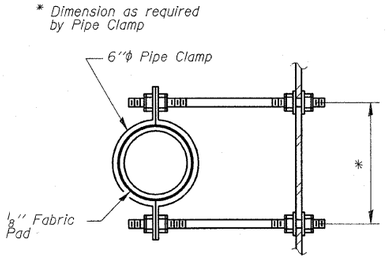

SECTION A-A

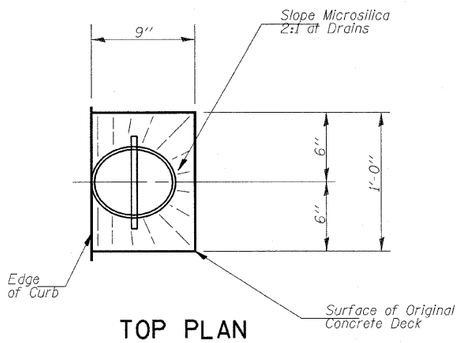

TOP PLAN

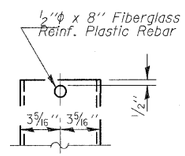

FIBERGLASS PIPE

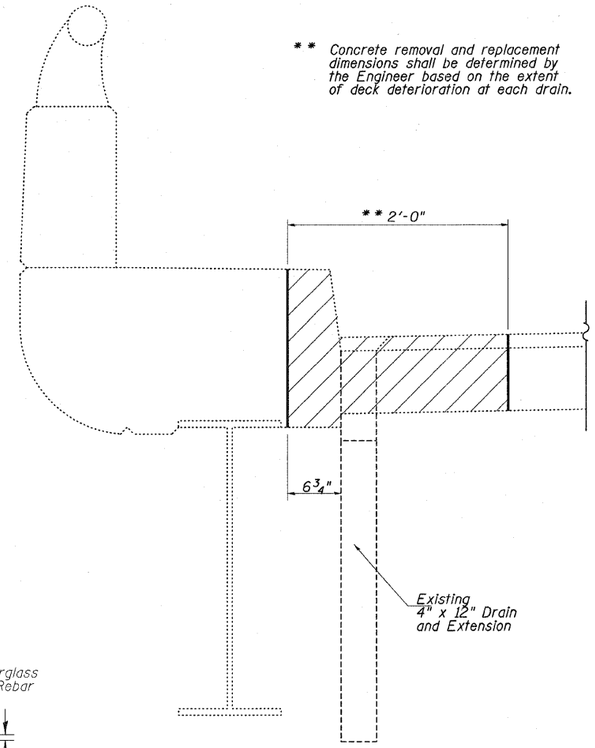

SECTION THRU EXISTING FLOOR DRAIN

Hatched area indicates concrete removal at floor drain replacement.

Note: Concrete removal and replacement quantities for drains are included in Deck Slab Repair as shown on "Bridge Deck Patching" plan sheets.

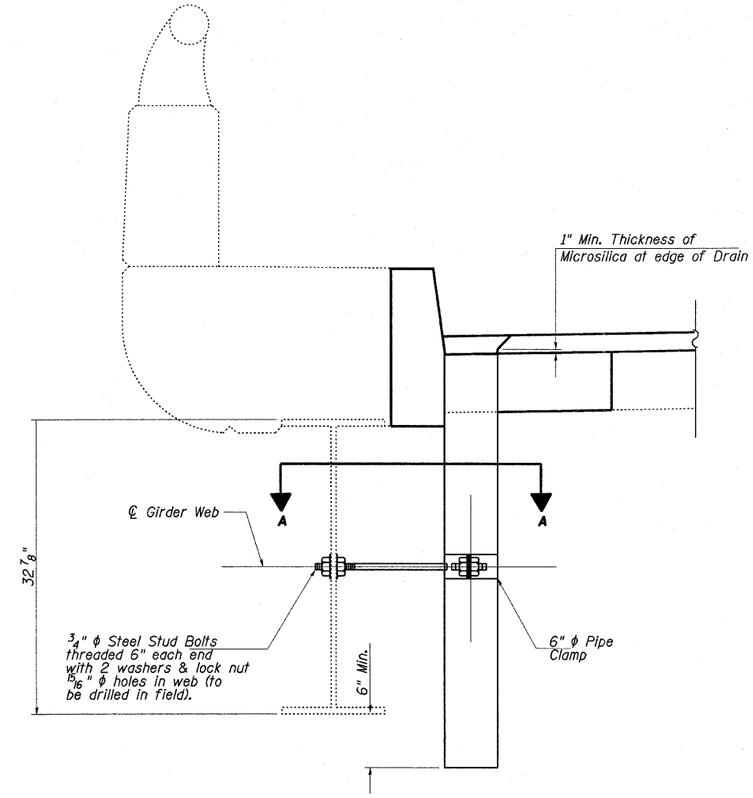

DRAIN REPLACEMENT DETAIL

Note: See "Bridge Deck Patching" plan sheets for Floor Drain replacement or elimination locations. See "Total Bill of Materials" for each structure for quantities.

Notes: The floor drains shall be painted to match the outside of the fascia beams. Fiberglass pipe shall conform to ASTM D 2996, with short-time rupture strength hoop tensile stress of 30,000 p.s.i. minimum. Galvanize clamping device according to AASHTO M232. Cost of clamping device and galvanizing is included with Floor Drains.

The exterior surfaces of the floor drains shall be painted with the finish coat as specified in the special provisions for Cleaning and Painting New Metal Structures. The exterior surfaces of the drains shall be cleaned according to Society of Protective Coating's Spec. SSPC-SP1 prior to painting.

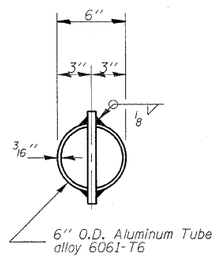

TOP PLAN

(Showing Aluminum Tube)

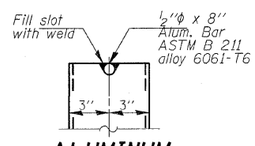

ALUMINUM TUBE

*(5-2VB-1,5-2HB,5-2VB-2)BR-2

FILE NAME = c:\pw_work\pwidot\swartzrw\d0207669\D774482-sht-brdetails-0800003.dgn	USER NAME = swartzrw	DESIGNED - KLB	REVISED -	STATE OF ILLINOIS DEPARTMENT OF TRANSPORTATION	FLOOR DRAIN DETAIL SN. 080-0003	F.A.P. RTE.	SECTION	COUNTY	TOTAL SHEETS	SHEET NO.
		DRAWN - KLB	REVISED -			327	*	Richland	53	16
	PLOT SCALE = 20.0000 ' / IN.	CHECKED - MEA	REVISED -					CONTRACT NO. 74482		
	PLOT DATE = 1/27/2011	DATE - 12/1/10	REVISED -		SCALE: NA / SHEET NO. 10 OF 15 SHEETS / STA. / TO STA.			ILLINOIS FED. AID PROJECT		