PERMANENT SURVEY MARKERS

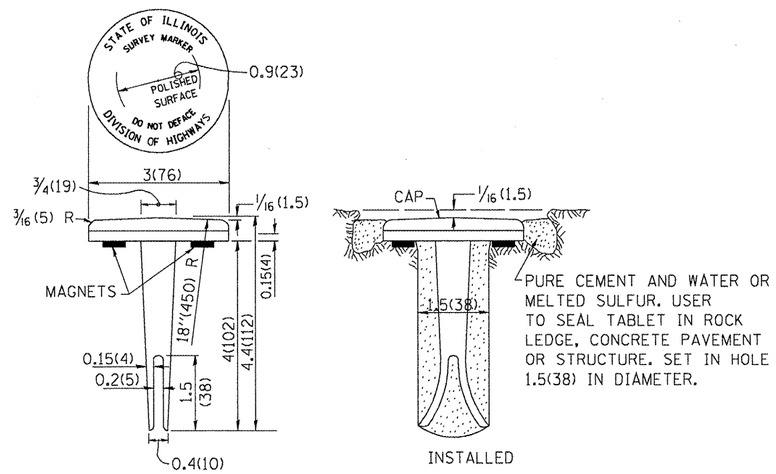

TYPE I

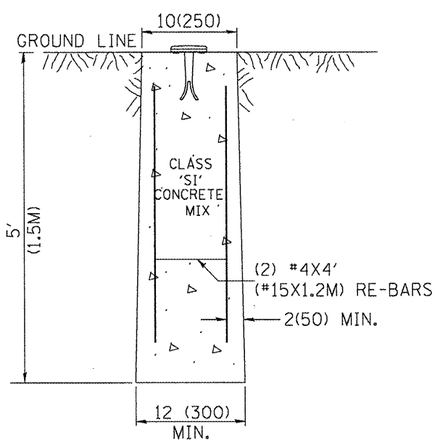

MARKER CAST IN PLACE
TYPE II

GENERAL NOTES

1. ALL TYPE II MARKERS SHALL BE CAST IN PLACE, AND PRECAST MARKERS WILL NOT BE ALLOWED.
2. TWO PERMANENT MAGNETS, EACH HAVING A DIAMETER OF 3/4 (19) AND A THICKNESS OF 1/4 (6), OR EQUIVALENT, SHALL BE ATTACHED TO THE UNDERSIDE OF THE TABLET WITH AN APPROVED EPOXY BONDING AGENT.
3. THE LOCATION OF THE MARKERS SHALL BE IN ACCORDANCE WITH THE PLANS IN GENERAL, THE MARKERS WILL BE PLACED AT THE P.C.'S, P.I.'S AND P.T.'S LOCATED WITHIN THE PAVEMENT OF HORIZONTAL CURVES AND SPACES ALONG THE TANGENTS IN A WAY THAT A MINIMUM OF TWO MARKERS ARE ALWAY INTER-VISIBLE, AND NOT TO EXCEED 1000' (300M).
4. THE MARKERS SHALL BE PLACED UNDER THE DIRECTION OF THE ENGINEER AND SHALL BE INSTALLED IN A WORKMANLIKE MANNER IN ORDER THAT THERE WILL BE NO FURTHER SETTLEMENT OR HORIZONTAL SHIFTING. THE MONUMENTS SHALL BE PLACED IN A WAY THAT THE SURVEY POINT WILL FALL WITHIN THE PORTION OF THE PLAQUE PROVIDED FOR THAT PURPOSE.
5. THE PROJECT DESIGNATION, THE CENTERLINE STATION, THE SURVEY POINT, AND THE ELEVATION SHALL BE PERMANENTLY MARKED BY THE USE OF METAL DIES AFTER MARKER HAS BEEN INSTALLED.

ALL DIMENSIONS ARE IN INCHES (MILLIMETERS) UNLESS OTHERWISE NOTED.

USER NAME = gjameson	DESIGNED -	REVISED -	WHKS & CO. ENGINEERING	7016 KINGSMILL CT., SPRINGFIELD, IL (217) 483-9457 DESIGN FIRM #184001036	STATE OF ILLINOIS DEPARTMENT OF TRANSPORTATION	PERMANENT SURVEY MARKERS DETAIL	F.A.P. RTE.	SECTION	COUNTY	TOTAL SHEETS	SHEET NO.
FILE NAME = D468482-sht-perm s	CHECKED -	REVISED -					542	105BR-1	McDONOUGH	117	29
PLOT DATE = 12/21/2010	DRAWN -	REVISED -				SCALE: SHEET NO. OF SHEETS STA. TO STA.			CONTRACT NO. 68482		
PLOT TIME = 10:27:56 AM	CHECKED -	REVISED -							ILLINOIS FED. AID PROJECT		