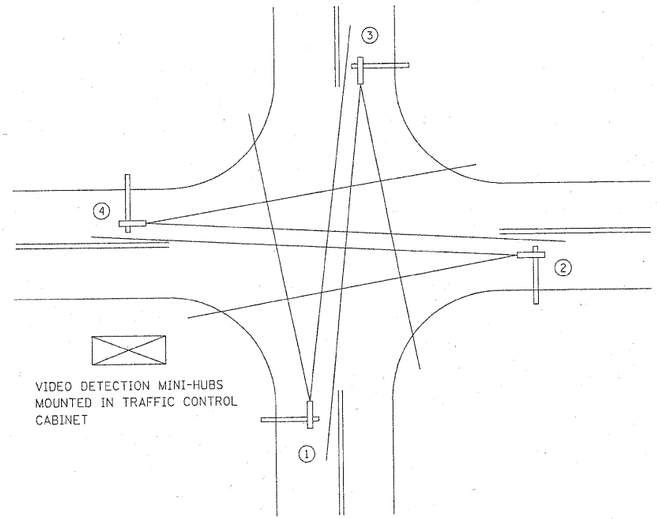

TYPICAL VIDEO VEHICLE DETECTION SYSTEM

(NOT TO SCALE)

(4) MACHINE VISION PROCESSOR ASSEMBLIES AND BRACKETS ① ② ③ ④
POWER CABLE TO EACH MACHINE VISION PROCESSOR (24 VAC)

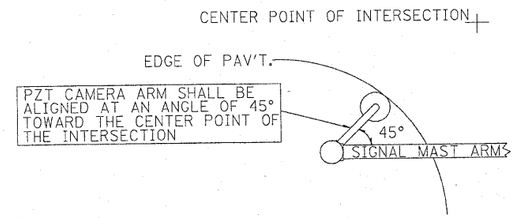

IMAGE SENSOR MOUNTING DETAILS

(NO SCALE)

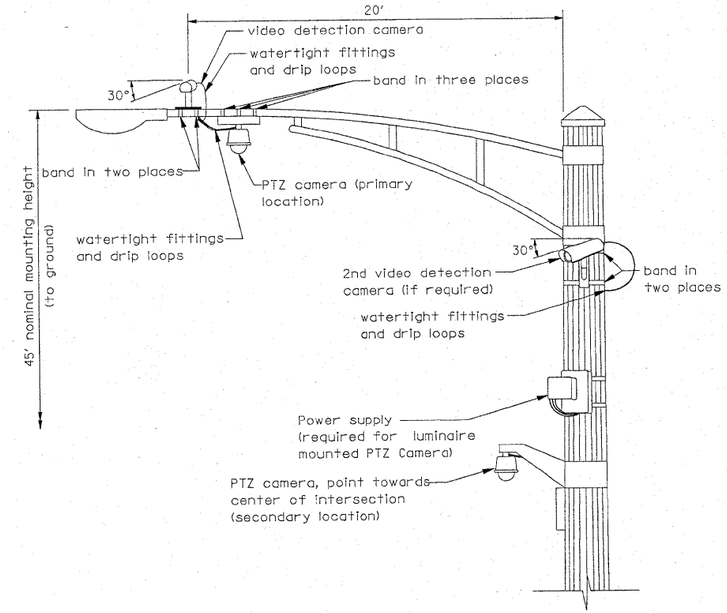

VIDEO DETECTION CAMERA(S) AND DOME (PTZ) CAMERA MOUNTING DETAIL

(NOT TO SCALE)

NOTES FOR SINGLE, DUAL AND MULTIPLE MVP MOUNTING:
- MOUNT LUMINAIRE MOUNTING BRACKET AS HIGH AS POSSIBLE.
- AIM BRACKET TOWARD DIRECTION OF TRAFFIC TO BE DETECTED.
- MOUNT MACHINE VISION PROCESSOR AIMING DOWN AT 30 DEGREE ANGLE.

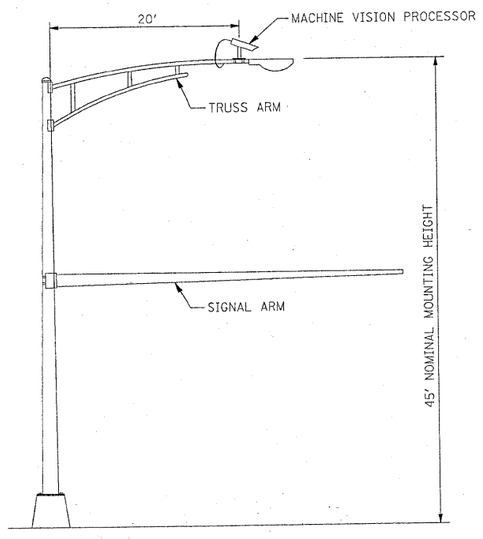

COMBINATION MAST ARM ASSEMBLY AND POLE DIMENSIONS

(NOT TO SCALE)

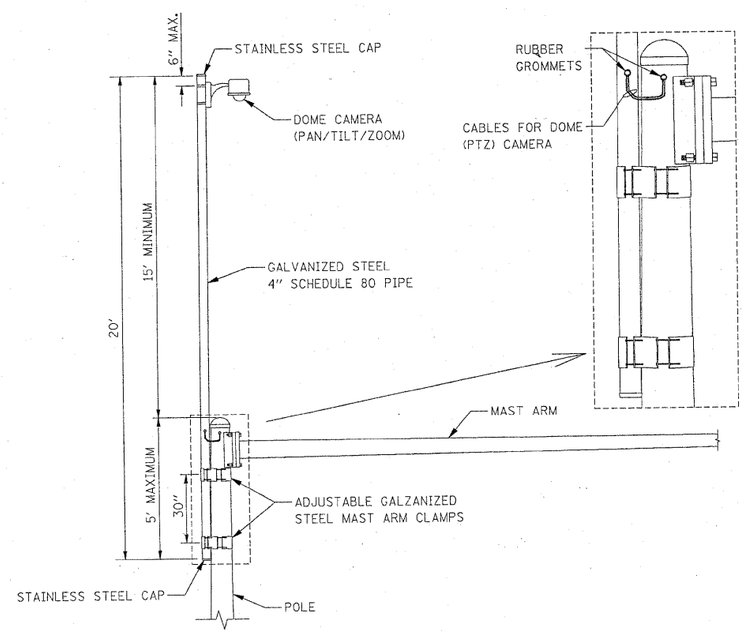

CAMERA MOUNTING ASSEMBLY DETAIL

(NOT TO SCALE)

REVISIONS	DATE
Mounting Details Revised	5/08
2nd Camera Locat. added	1/1409

LakeCounty Division of Transportation

APPROVED BY: A. KHAWAJA
DATE: APRIL 1, 2007

VIDEO DETECTION DETAILS

LC8900

REVISIONS / REMARKS					
NO.	DESCRIPTION	DATE	BY	SURVEYOR:	/
		/ /		DSGNR/LIAISON:	
		/ /		PLOTTED BY:	$USRN$ $$DAT$$$$

FILE NAME: $FILE$

LakeCounty Division of Transportation

VIDEO DETECTION DETAILS

ROUTE	SECTION	SECTION NUMBER	SHEET	SHEETS
CH		56N-4	50	31

...\LC8900.DGN 10/1/2010 10:56:19 AM