LE035

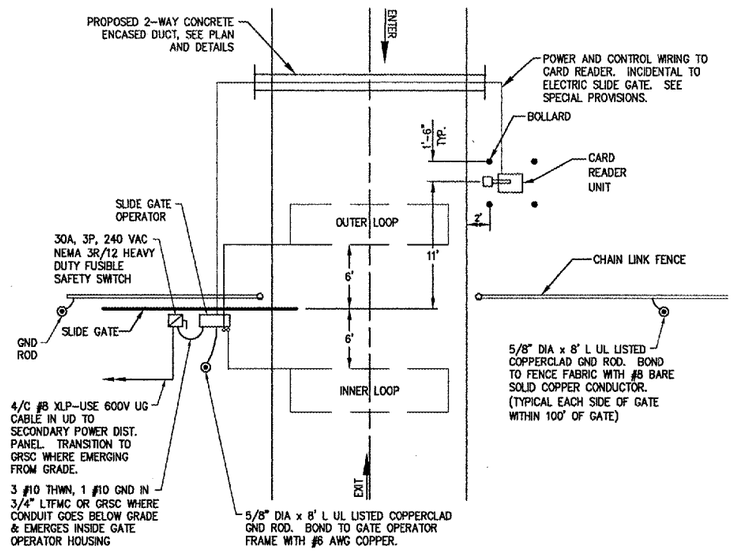


## PLAN VIEW

| VEHICLE DETECTOR LOOPS | | |
|---|---|---|
| GATE SIZE | LOOP SIZE | NO. OF TURNS |
| 8' TO 12' | 4' X 6' | 3 TURNS |
| 12' TO 16' | 4' X 10' | 2 TURNS |
| 16' TO 20' | 4' X 14' | 2 TURNS |
| 20' TO 24' | 4' X 18' | 2 TURNS |
| 24' TO 30' | 6' X 22' | 2 TURNS |
| 30' TO 34' | 6' X 26' | 2 TURNS |

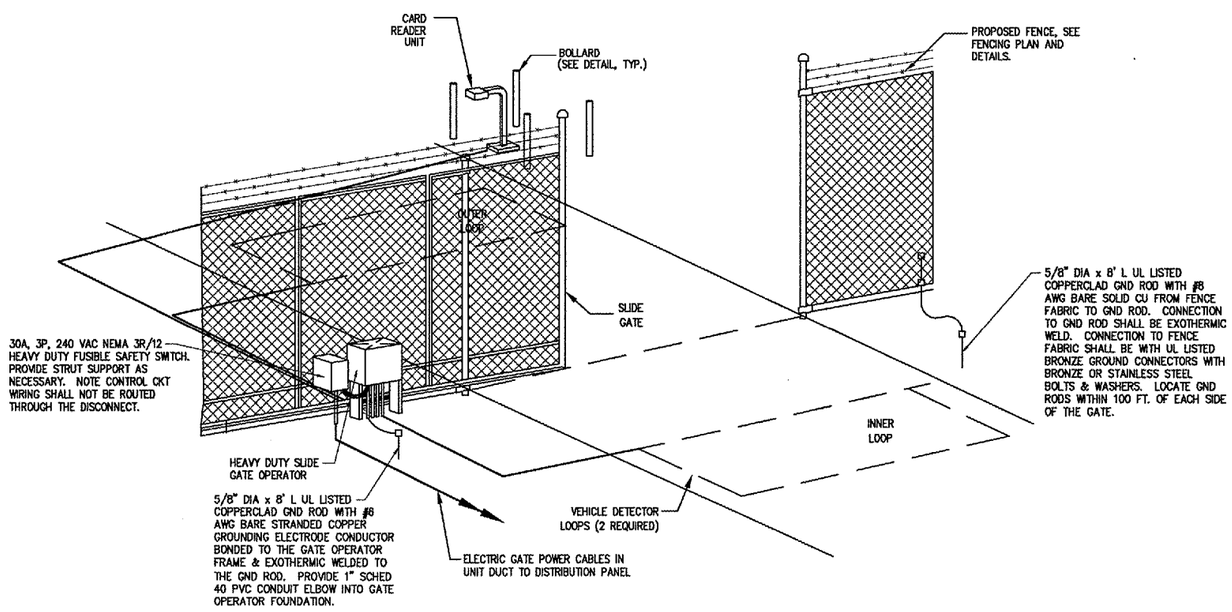


## 20' AND 24' CARD GATE DETAIL

NOTES

1. SEE SPECIAL PROVISION SPECIFICATIONS FOR REQUIREMENTS ON GATE & GATE OPERATOR SYSTEM.
2. ALL DIMENSIONS AND LAYOUT INFORMATION SHOWN SHOULD BE ADJUSTED AS RECOMMENDED BY THE MANUFACTURER.
3. CONCRETE FOUNDATIONS SHALL BE PROVIDED FOR THE SLIDE GATE OPERATOR AND THE CARD READER CONTROL UNIT. FOUNDATION FOR THE GATE OPERATOR SHALL BE 48" (MIN.) IN DEPTH AND OF THE SIZE RECOMMENDED BY THE MANUFACTURER. FOUNDATION FOR THE CARD READER ACCESS CONTROL UNIT SHALL BE 48" (MIN.) IN DEPTH, AS DETAILED HEREIN.
4. 1" GRS CONDUIT WILL BE REQUIRED BETWEEN THE SLIDE GATE OPERATOR AND THE CARD READER ACCESS CONTROL UNIT AND BETWEEN THE SLIDE GATE OPERATOR AND THE DETECTOR LOOPS. THE MINIMUM BURYING DEPTH IS 24". ALL METAL CONDUITS ENTERING THE GATE OPERATOR SHALL BE BONDED TO THE GATE OPERATOR FRAME WITH A #8 AWG (MIN.) COPPER BONDING JUMPER. CONFIRM CONTROL WIRING REQUIREMENTS WITH THE RESPECTIVE GATE OPERATOR SALES AND SERVICE REPRESENTATIVE.
5. THE GUARD/BOLLARD POSTS SHALL BE 6" DIA. STEEL (HEAVY WALL) PIPE, CONCRETE FILLED, AND SHALL EXTEND FROM THE TOP OF THE CARD CONTROL UNIT TO A DEPTH OF 48" BELOW THE GROUND LINE. THE CONCRETE FOOTER DIMENSION SHALL BE AS DETAILED HEREIN. GUARD/BOLLARD POSTS SHALL BE PAINTED WITH YELLOW COLORED ENAMEL FINISH.
6. THE SLIDING GATE SHALL BE CANTILEVER TYPE OF THE SIZE CALLED FOR ON THE PLANS WITH AN ENCLOSED ROLLER ASSEMBLY WHICH IS PROTECTED FROM FREEZING RAIN AND SNOW, AND SHALL BE AS MANUFACTURED BY TYMETAL CORPORATION, OR APPROVED EQUAL.
7. THE SLIDE GATE OPERATOR IS TO BE MOUNTED ON A STEEL PLATFORM LOCATED APPROXIMATELY 1'-6" ABOVE THE GROUND. WHERE STEEL PLATFORM IS NOT A STANDARD OPTION EXTEND THE FOOTING/FOUNDATION PAD APPROXIMATELY 8" ABOVE GRADE. SHOP DRAWINGS APPROVAL IS REQUIRED.
8. CONTRACTOR SHALL PROVIDE VERIFICATION THAT THE PROPOSED GATE OPERATOR IS SUITABLE FOR USE WITH & PROPERLY SIZED FOR THE RESPECTIVE SLIDE GATE.
9. CONTRACTOR SHALL COORDINATE ANY POWER OUTAGES TO EXISTING EQUIPMENT WITH THE RESPECTIVE OWNER'S REPRESENTATIVE AND THE AIRPORT MANAGER.
10. INCLUDE LOW VOLTAGE LINE PROTECTOR FOR THE CARD READER ACCESS CONTROL UNIT SUITABLE FOR USE ON THE RESPECTIVE CONTROL VOLTAGE SYSTEM, WITH SURGE CURRENT MAXIMUM RATING OF 3000 AMPS, LIFETIME PRODUCT REPLACEMENT WARRANTY AND AS RECOMMENDED BY THE KEYPAD ACCESS CONTROL UNIT MANUFACTURER'S REPRESENTATIVE.
11. INCLUDE UL LISTED SECONDARY SURGE ARRESTER FOR THE GATE OPERATOR SUITABLE FOR USE ON 208 VAC, 3 PHASE, 3 WIRE PLUS GROUND SYSTEM, WITH SURGE CURRENT RATING OF 75 KA PER MODE, LIFETIME PRODUCT REPLACEMENT WARRANTY, AND AS RECOMMENDED BY THE GATE OPERATOR MANUFACTURER'S REPRESENTATIVE.
12. INCLUDE LIGHTNING PROTECTION/SURGE ARRESTERS FOR THE DETECTOR AMPLIFIERS, AS RECOMMENDED BY THE MANUFACTURER.
13. CONCRETE USED FOR INSTALLING THE GATE OPERATOR, CARD READER, & FENCE SHALL MEET THE REQUIREMENTS OF STRUCTURAL PORTLAND CEMENT CONCRETE ITEM AR610.
14. AS PART OF THIS ITEM 125 CARDS AND 5 REMOTE TRANSMITTER FOR EACH GATE SHALL BE PROVIDED BY THE CONTRACTOR. COORDINATE PROGRAMMING OF CARDS & TRANSMITTER FREQUENCIES WITH THE AIRPORT MANAGER.
15. CONTRACTOR SHALL BE RESPONSIBLE TO ENSURE THAT THE ELECTRIC GATE OPERATOR, SLIDE GATE, & ALL ASSOCIATED POWER & CONTROL DEVICES ARE COMPATIBLE WITH EACH OTHER & SUITABLE FOR THE RESPECTIVE APPLICATION TO PROVIDE A COMPLETE AND PROPERLY OPERATIONAL ELECTRIC SLIDE GATE INSTALLATION.
16. ALL ELECTRICAL EQUIPMENT SHALL BE INSTALLED IN CONFORMANCE WITH NFPA 70 (MOST CURRENT ISSUE IN FORCE), THE RESPECTIVE EQUIPMENT MANUFACTURER'S DIRECTIONS AND ALL OTHER APPLICABLE LOCAL CODES, LAWS, ORDINANCES, AND REQUIREMENTS IN FORCE. ANY INSTALLATIONS WHICH VOID THE UL LISTING, ETL LISTING, (OR OTHER THIRD PARTY LISTING) AND/OR THE MANUFACTURER'S WARRANTY OF A DEVICE SHALL NOT BE PERMITTED.
17. PROVIDE A WEATHERPROOF ENGRAVED PHENOLIC OR PLASTIC LEGEND PLATE FOR THE SAFETY SWITCH AT THE RESPECTIVE GATE OPERATOR NOTING THE GATE SERVED, VOLTAGE, AND RESPECTIVE POWER SOURCE CIRCUIT AND LOCATION.
18. CARD GATE TO MEET THE SAME SPECIFICATION AS THE FENCING FOR SIZE, COATINGS, BARBED WIRE, ETC., SEE FENCING DETAILS.

DETAILS SHOWN ARE NOT TO SCALE


HANSON

HANSON PROFESSIONAL SERVICES INC.

815 Commerce Drive, Suite 200
Oak Brook, Illinois 60523
Telephone: 630.990.3800
Fax: 630.990.3801

Chicago-Romeoville Airport

JOLIET REGIONAL PORT DISTRICT

1 Hangar Road
Romeoville, Illinois 60446
Telephone: 815.838.9497
Fax: 815.838.9524


EXTEND TAXIWAY E: CONSTRUCT GA APRON, AVGAS FUELING APRON AND AUTO PARK 100

AIP PROJECT NO. 3-17-0140-B38
IDA PROJECT NO. LOT-3441

| No. | Drawing Issue Description | Date | By |
|---|---|---|---|

Date

MARCH 25, 2005

Sheet Title

ELECTRIC SLIDING GATE PLAN AND DETAILS (ADDITIVE NO. 1)

840-04D8041
Project Number

Layout By Date

Designed By Date

Reviewed By Date

Drawn By

Sheet No.

51


I:\0A2005\02840\04D8041\DRAWINGS\SHEETS\51-ELECTRIC GATE DETAILS.DWG MAR 28, 2005 12:16PM TMM