LE035

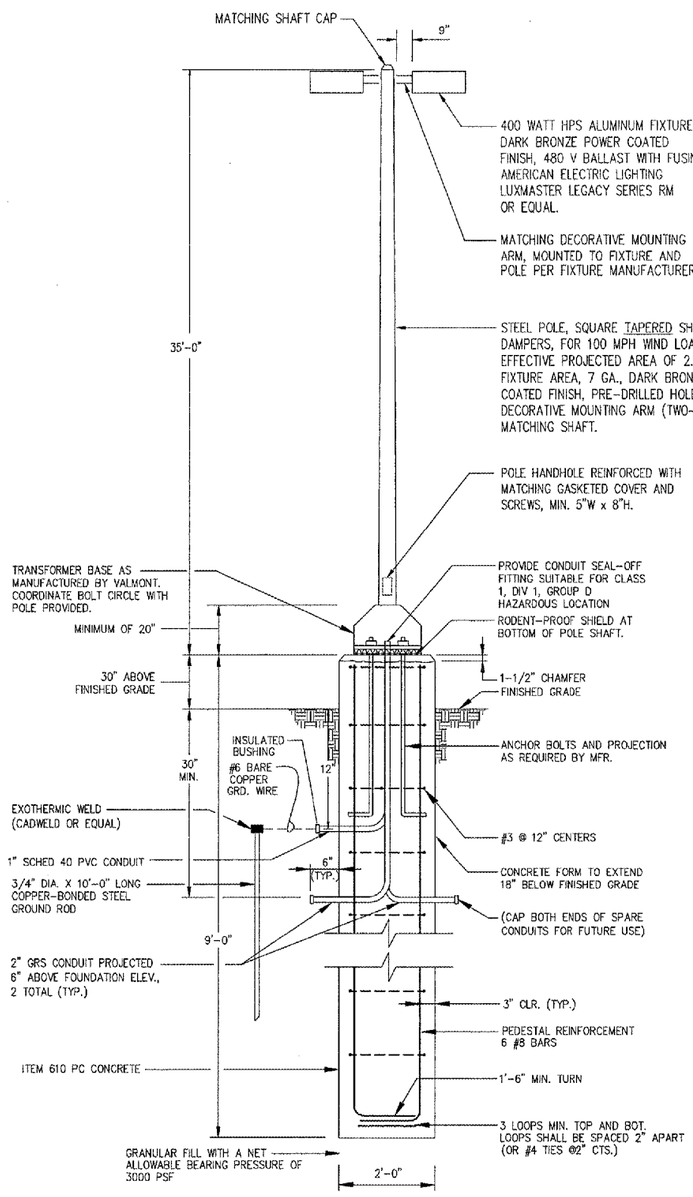

NOTES:

1. POLE FOUNDATION IS 9'-0" DEEP AND 24" DIA. FOR 35' POLE.
2. POLE SUPPLIER TO FURNISH ALL LOADING INFORMATION PERTAINING TO DESIGN OF CONCRETE FOUNDATION FOR FINAL CHECKING BY STRUCTURAL ENGINEER. SEE SPECIAL PROVISIONS.

FUELING APRON LIGHT POLE FOUNDATION

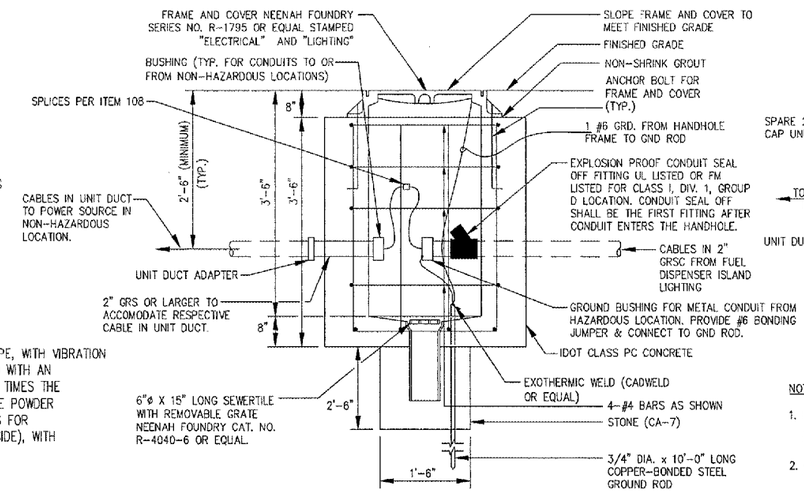

SECTION

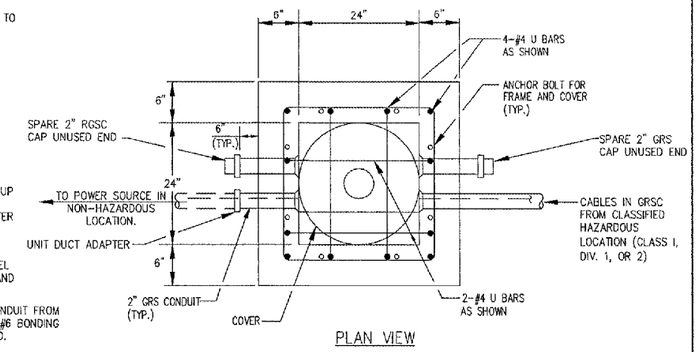

PLAN VIEW

NOTES

1. ELECTRICAL HANDHOLE DETAIL SHOWN IS FOR USE AS A CLASSIFIED HAZARDOUS LOCATION BOUNDRY TRANSITION POINT.
2. WHERE SPLICES ARE MADE IN HANDHOLE PROVIDE 10 FEET OF SLACK CABLE.

PRE-CASTELECTRICAL HANDHOLE DETAIL

SEE SPECIAL PROVISIONS

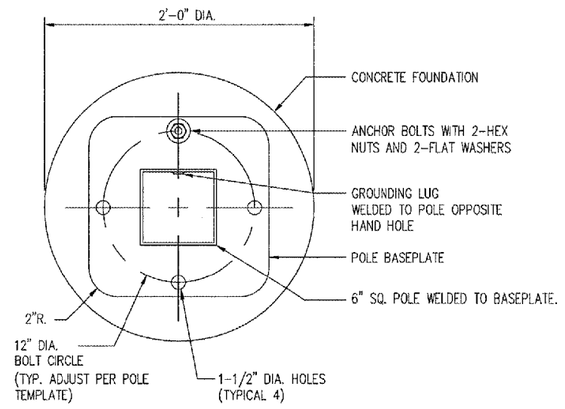

FUELING APRON LIGHTING POLE BASE

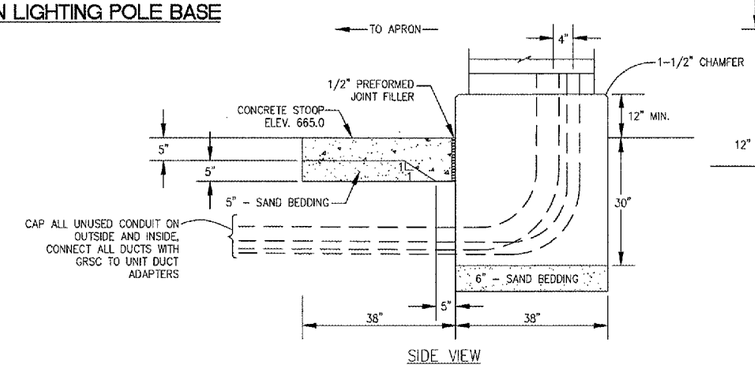

SIDE VIEW

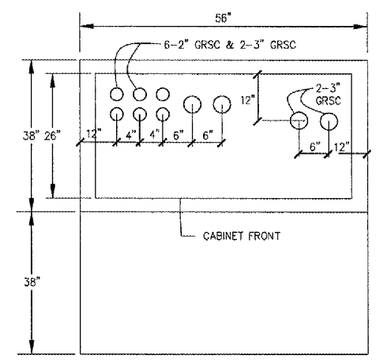

PLAN VIEW

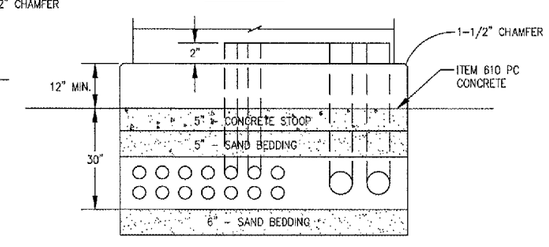

FRONT VIEW

NOTES:

1. SEE DISTRIBUTION CABINET DETAILS AND SCHEMATIC SHEET FOR ADDITIONAL INFORMATION.
2. ALL PANEL FOUNDATION WORK INCLUDED IN ITEM AR109400.

DISTRIBUTION PANEL FOUNDATION

DETAILS SHOWN ARE NOT TO SCALE

HANSON

HANSON PROFESSIONAL SERVICES INC.

815 Commerce Drive, Suite 200
Oak Brook, Illinois 60523
Telephone: 630.990.3800
Fax: 630.990.3801

Chicago-Romeoville Airport

JOLIET REGIONAL PORT DISTRICT

1 Hangar Road
Romeoville, Illinois 60446
Telephone: 815.838.9497
Fax: 815.838.9524

EXTEND TAXIWAY E: CONSTRUCT GA APRON, AVGAS FUELING APRON AND AUTO PARK 100

AIP PROJECT NO. 3-17-0140-B38
IDA PROJECT NO. LOT-3441

No.	Drawing Issue Description	Date	By

Date

MARCH 25, 2005

Sheet Title

ELECTRICAL FOUNDATIONS AND DETAILS

840-04D8041
Project Number

LDH 03/15/05
Layout By Date

LDH/TMM 03/15/05
Designed By Date

RMH 03/16/05
Reviewed By Date

LDH |---|---
Drawn By

50
Sheet No.

I:\04JOBS\008840\04D8041\DRAWINGS\SHEETS\50-35' LIGHT FDN AND DETAILS.DWG MAR 28, 2005 12:16PM TMM