LE035

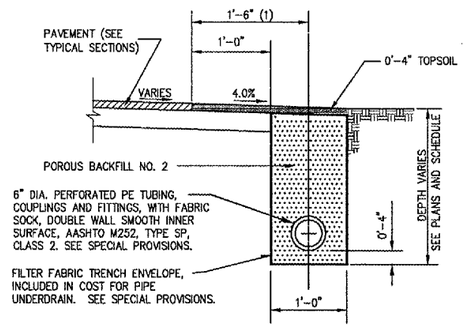

NOTE:

1. WHEN THE UNDERDRAIN IS ADJACENT TO CURB AND GUTTER IT IS TO BE CENTERED 6" BEHIND THE BACK OF CURB.

UNDERDRAIN ALONG PAVEMENT EDGE

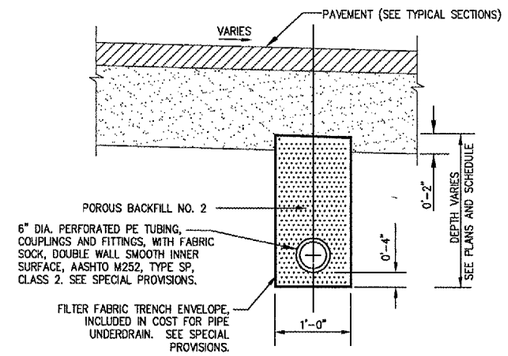

UNDERDRAIN UNDER PAVEMENT

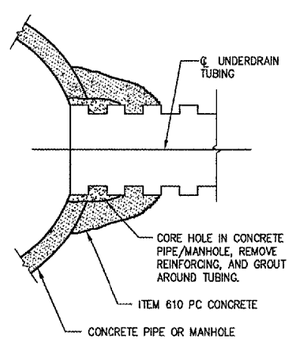

STORM SEWER CONCRETE COLLAR AND GROUT CONNECTION

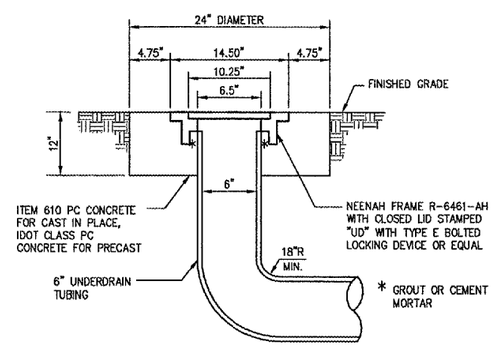

UNDERDRAIN CLEANOUT

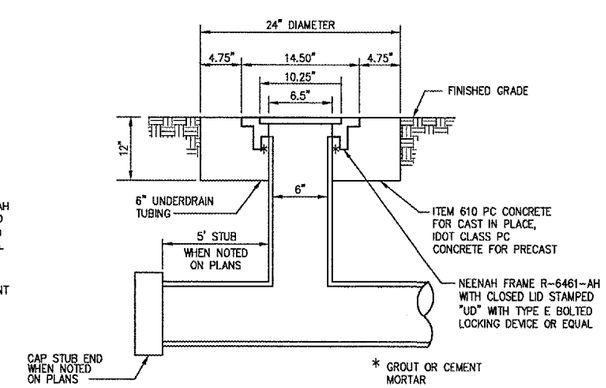

UNDERDRAIN INSPECTION HOLE

DETAILS SHOWN ARE NOT TO SCALE

HANSON

HANSON PROFESSIONAL SERVICES INC.

815 Commerce Drive, Suite 200
Oak Brook, Illinois 60523
Telephone: 630.990.3800
Fax: 630.990.3801

Chicago-Romeoville Airport

JOLIET REGIONAL PORT DISTRICT

1 Hangar Road
Romeoville, Illinois 60446
Telephone: 815.838.9497
Fax: 815.838.9524

EXTEND TAXIWAY E: CONSTRUCT GA APRON, AVGAS FUELING APRON AND AUTO PARK 100

AIP PROJECT NO. 3-17-0140-B38
IDA PROJECT NO. LOT-3441

No.	Drawing Issue Description	Date	By

Date

MARCH 25, 2005

Sheet Title

UNDERDRAIN DETAILS

840-04D8041
Project Number

LDH 02/23/05
Layout By Date

LDH/TMM 02/23/05
Designed By Date

RMH 03/15/05
Reviewed By Date

LDH | TMM | ---
Drawn By

Sheet No. 20

I:\04JOBS\(0840)\04D8041\DRAWINGS\SHEETS\20-DRAINAGE DETAILS.DWG MAR 28, 2005 12:13PM TMM