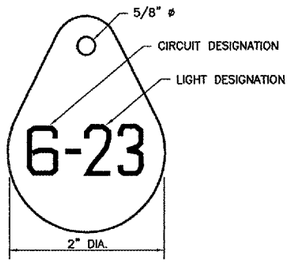

LIGHT IDENTIFICATION DETAIL

NOT TO SCALE

NOTES:

1. INSTALL A NONCORROSIVE DISC OF 2" MINIMUM DIAMETER WITH THE NUMBER PERMANENTLY STAMPED, CUT OUT, OR ENGRAVED UNDER THE HEAD OF THE BASE PLATE BOLT OR ATTACHED TO LIGHT FLANGE WITH A SET SCREW.
2. NUMERALS SHOWN ARE FOR ILLUSTRATIVE PURPOSES ONLY. ALL EXISTING AND PROPOSED TAXIWAY AND RUNWAY LIGHTS SHALL BE TAGGED AS DIRECTED BY THE RESIDENT ENGINEER. ALL LIGHTS ON EXISTING CIRCUITS THAT HAVE LIGHTING IMPROVEMENTS (PROPOSED OR RELOCATED LIGHTS) SHALL BE RETAGGED.
3. COST OF TAGGING LIGHTS SHALL NOT BE PAID FOR SEPERATELY BUT SHALL BE CONSIDERED INCIDENTAL TO THE CONTRACT.

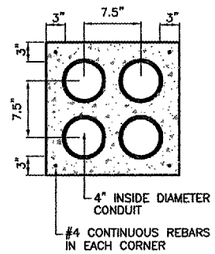

4-WAY

CONCRETE ENCASED DUCT BANKS

NOT TO SCALE

NOTES:

1. DIMENSIONS ARE MINIMUM.
2. CONCRETE SHALL CONFORM TO ITEM 610.
3. ALL CONDUIT SHALL BE SCHEDULE 40 PVC.
4. TOP OF CONCRETE ENCASEMENT IN TURF AREAS SHALL NOT BE LESS THAN 24" BELOW FINISHED GRADE.
5. 4" SPLIT DUCT SHALL BE CONCRETE ENCASED WITH 3" MINIMUM CONCRETE SURROUNDING 4" CONDUIT. COST INCIDENTAL TO SPLIT DUCT.
6. PROVIDE PULL STRING AND CAPS FOR UNUSED DUCTS.

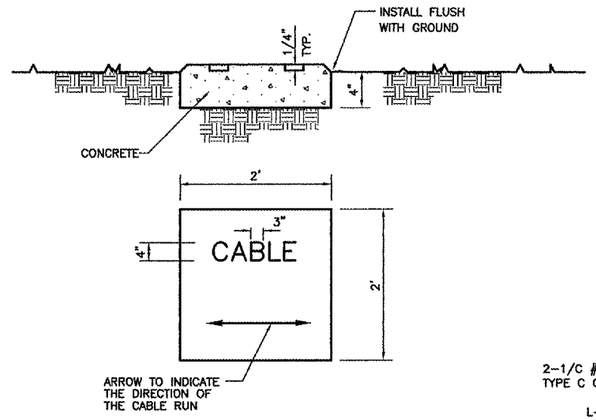

TURF CABLE MARKER DETAIL

NO SCALE

NOTES

1.) CABLE MARKERS SHALL BE INSTALLED AT ALL BENDS AND EVERY 200' ALONG THE CABLE RUN.

2.) ITEM 610 CONCRETE SHALL BE USED.

3.) ALL EXPOSED EDGES SHALL BE EDGED WITH A 1/4" RADIUS TOOL.

4.) THE COST OF FURNISHING AND INSTALLING NEW MARKERS SHALL BE INCIDENTAL TO THE ASSOCIATED CABLE ITEMS.

5.) 0.049 CU. YD. CONCRETE PER MARKER.

6.) CONTACTOR SHALL LOCATE EXISTING CABLE MARKERS IN THE FIELD BEFORE SHOULDER ADJUSTMENT BEGINS IN ORDER TO REPLACE CABLE MARKERS AT CORRECT LOCATIONS (COST INCIDENTAL TO CONTRACT).

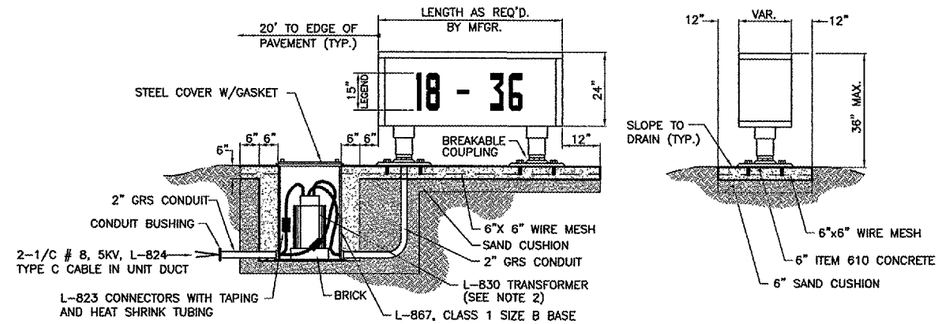

HOLD LINE / TAXIWAY GUIDANCE SIGN L-858, SIZE 2, STYLE 2, CLASS 2

NOT TO SCALE

SIGNAGE NOTES

1. ALL SIGNS ARE LUMACURVE 2-SIDED SIGNS BY STANDARD SIGNS OR APPROVED EQUAL.
2. TRANSFORMER WATTAGE AS RECOMMENDED BY MANUFACTURER.
3. LIGHTED SIGNS SHALL BE BASE MOUNTED ONLY.
4. UNIT DUCT SHALL BE TERMINATED IN THE CAN AND SEALED TO THE CABLE WITH HEAT SHRINK AS SPECIFIED.
5. THE NUMBER OF MODULES PER SIGN SHALL BE AS RECOMMENDED BY THE MANUFACTURER.
6. CONTRACTOR SHALL SUBMIT DETAILED SHOP DRAWING INCLUDING SIGN, COLOR, SIZE AND PROPOSED LEGEND, IN ENOUGH DETAIL AND DETERMINE PROPOSED SPACING AND OTHER INFORMATION REQUIRED BY SPECIAL PROVISIONS. CONTRACTOR TO VERIFY PROPOSED SIGN LOCATIONS AND ORIENTATIONS WITH RESIDENT ENGINEER PRIOR TO INSTALLATION.
7. WHEN EXISTING SIGNS ARE PROPOSED TO BE RETROFITTED WITH NEW SIGN PANELS, THE SIGN PANELS SHALL CONFORM TO THE APPLICABLE REQUIREMENTS OF ADVISORY CIRCULAR 15015340-18 (LATEST EDITION). THE CONTRACTOR SHALL VERIFY THAT THE PROPOSED SIGN PANELS ARE COMPATIBLE WITH THE EXISTING SIGN ASSEMBLIES WHICH ARE LUMACURVE BY STANDARD SIGNS.

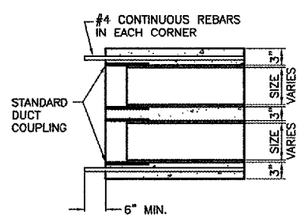

CONCRETE ENCASED DUCT END DETAIL

NO SCALE

GERERAL NOTES:

1. THE CONCRETE BASE FOR BASE MTD. LIGHTS SHALL BE TROWEL FINISHED WITH A 45° BEVELED EDGE. SLOPE TO DRAIN (610).
2. TRANSFORMER HOLDER SHALL BE ANY COMMERCIALLY AVAILABLE BRICK.
3. BREAKING GROOVE COUPLINGS SHALL NOT BE OVER 1" ABOVE GROUND LINE.
4. ISOLATION TRANSFORMERS COME WITH A FACTORY INSTALLED PLUG (TYPE 1, CLASS A, STYLE 2) AND RECEPTACLE (TYPE 1, CLASS A, STYLE 9). A TYPE 1, CLASS B, STYLE 3 PLUG AND TYPE 1, CLASS B, STYLE 10 RECEPTACLE SHALL BE INSTALLED ON THE 1/C, No. 8, 5000 V., L-824 TYPE C CABLES FOR CONNECTION TO EACH TRANSFORMER.
5. TO FURTHER REDUCE THE POSSIBILITY OF WATER/MOISTURE ENTRANCE INTO THE CONNECTOR BETWEEN THE CABLE AND THE FIELD ATTACHED CONNECTOR, IT IS REQUIRED THAT A HEAT SHRINKABLE TUBING WITH INTERNAL ADHESIVE BE APPLIED OVER THE ENTIRE CABLE CONNECTOR.
6. ALL SIGNS, LIGHTS, CABLES AND TRANSFORMERS TO BE REMOVED SHALL REMAIN THE PROPERTY OF THE AIRPORT. AT THE DISCRETION OF THE AIRPORT MANAGER, THE CONTRACTOR MAY BE REQUIRED TO DISPOSE OF THESE MATERIALS OFFSITE AT NO ADDITIONAL COST.
7. TAXIWAY LIGHTS SHALL HAVE A BLUE LENS, RUNWAY LIGHTS SHALL HAVE A CLEAR OR 180° AMBER/CLEAR LENS AS DESIGNATED ON PLANS.
8. DUCT MARKERS SHALL BE INSTALLED AT EVERY NEW DUCT AND AT EVERY EXISTING DUCT USED FOR THIS PROJECT.
9. CONTRACTOR SHALL HAVE THE OPTION TO TRENCH OR PLOW UNIT DUCT. NO ADDITIONAL PAYMENT SHALL BE MADE FOR TRENCHING.

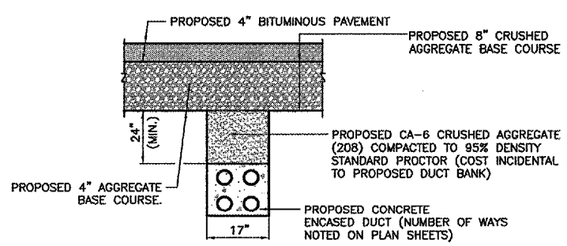

CONCRETE ENCASED DUCT BACKFILL

NOT TO SCALE

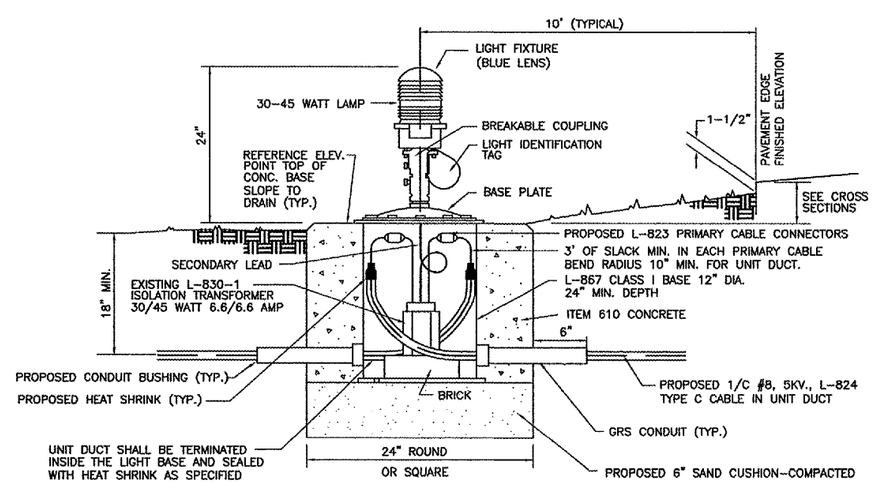

PROPOSED/ADJUSTED/RELOCATED BASE MOUNTED MEDIUM INTENSITY TAXIWAY LIGHT

NOT TO SCALE

PATH: K:\0329702\sheets\
FILE: edtl2.dwg
UPDATE BY: johse
SURVEY BOOK #
XREF DWG:
XREF DWG:
DATE: Mon 3/29/04 9:06am

REVISIONS

NUMBER	BY	DATE

0 1 2
THIS BAR IS EQUAL TO 2" AT FULL SCALE (34X22).

LANSING MUNICIPAL AIRPORT
LANSING, ILLINOIS
NORTH QUADRANT SITEWORK - PHASE 1
AND TAXIWAY G2 EXTENSION

ELECTRICAL DETAILS - SHEET 2

© Copyright CMT, Inc.

CMT
CRAWFORD, MURPHY & TILLY, INC.
CONSULTING ENGINEERS
License No. 184-000613

Lansing Municipal airport

DESIGN BY:	DKP
DRAWN BY:	JRO
CHECKED BY:	ARM
APPROVED BY:	
DATE:	03/04/05
JOB No:	03297-02

IL PROJECT: IGQ-3329
A.I.P. PROJECT: 3-17-0121-B21