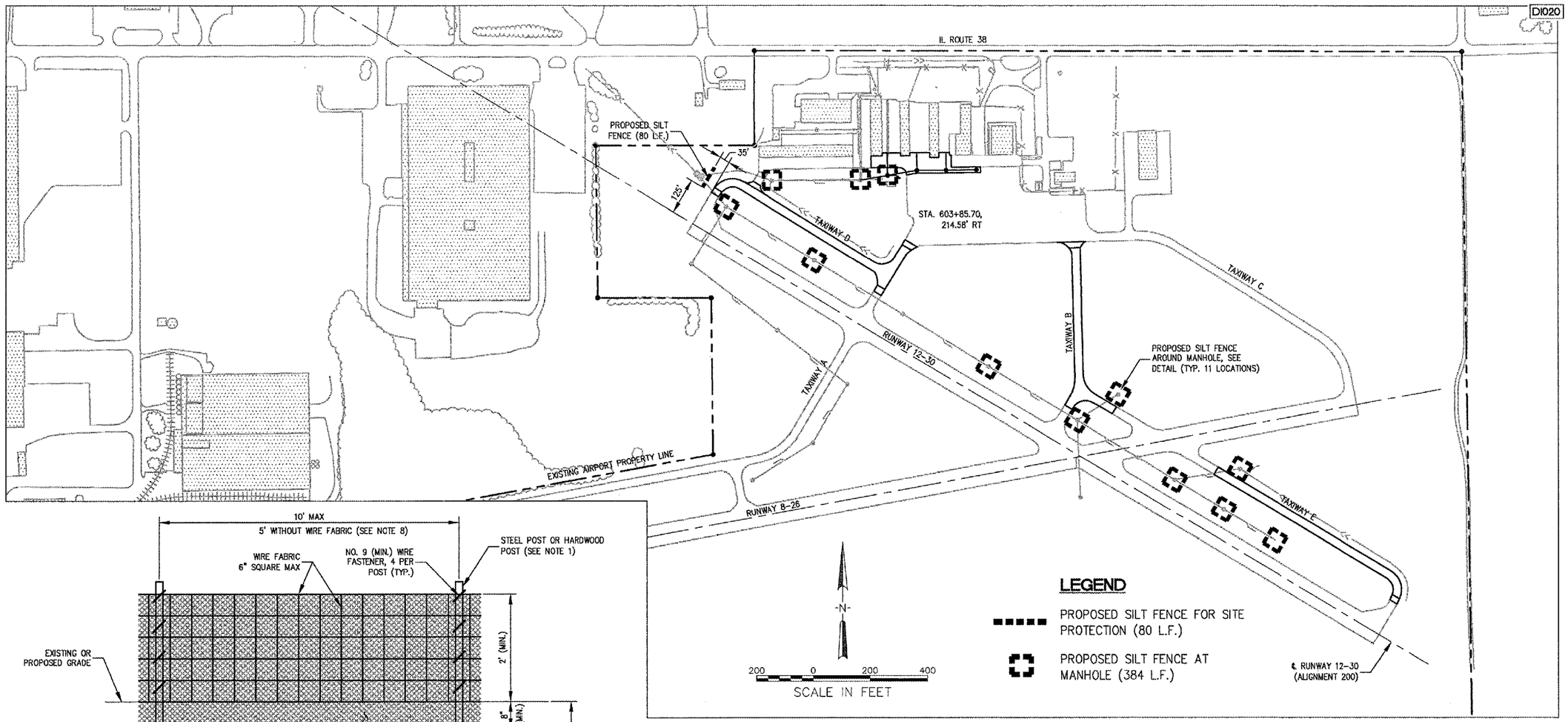

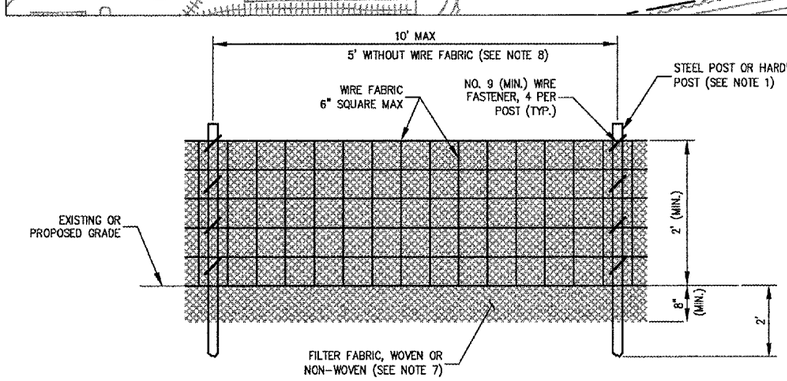

ELEVATION

NOTES:

1. FENCE POST SHALL BE EITHER STEEL "T" LINE POST OR HARDWOOD POST WITH A MINIMUM SECTIONAL AREA OF 3.0 SQUARE INCHES.
2. TOP AND BOTTOM WIRE OF WIRE FABRIC SHALL BE MINIMUM GAGE NO. 9. INTERMEDIATE WIRES OF THE WIRE FABRIC SHALL BE MINIMUM GAGE NO. 11.
3. WIRE FABRIC SHALL BE SECURELY FASTENED TO FENCE POSTS WITH NO. 9 GAGE WIRE MINIMUM. FOUR (4) FASTENERS PER POST REQUIRED.
4. FILTER FABRIC SHALL BE SECURELY FASTENED TO WIRE FABRIC AND POSTS WITH TIES OR STAPLES SPACED AT 12" APART AT THE TOP, MIDDLE AND BOTTOM.
5. WHEN TWO SECTIONS OF FILTER FABRIC MEET, THEY SHALL BE OVERLAPPED BY 6" AND FOLDED AND ATTACHED TO THE WIRE FABRIC AT A POST.
6. MAINTENANCE SHALL BE PERFORMED AS NEEDED AND MATERIAL REMOVED AND REPLACED WHEN BULGES DEVELOP IN THE SILT FENCE.
7. FILTER FABRIC SHALL BE IN ACCORDANCE WITH SPECIAL PROVISIONS WITH EQUIVALENT OPENING SIZE OF AT LEAST 30 FOR NONWOVEN AND 50 FOR WOVEN.
8. WIRE FABRIC MAY BE OMITTED IF A MAXIMUM OF 5 FEET IS USED FOR POST-TO-POST SPACING.
9. SILT FENCE SHALL BE INSTALLED PRIOR TO ANY GRADING WORK IN THE AREA TO BE PROTECTED. PERIODIC INSPECTION SHALL BE PERFORMED AND REQUIRED MAINTENANCE SHALL BE PROVIDED AFTER EACH RAIN EVENT.
10. FENCE POSTS SHALL BE REMOVED WHEN DIRECTED AT PROJECT END.

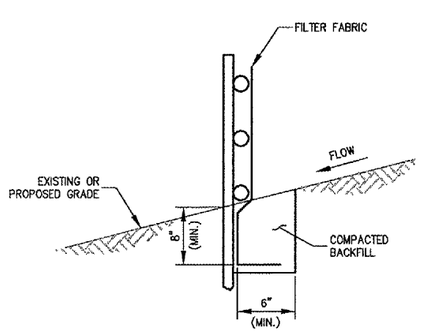

FABRIC ANCHOR DETAIL

SILT FENCE PLAN

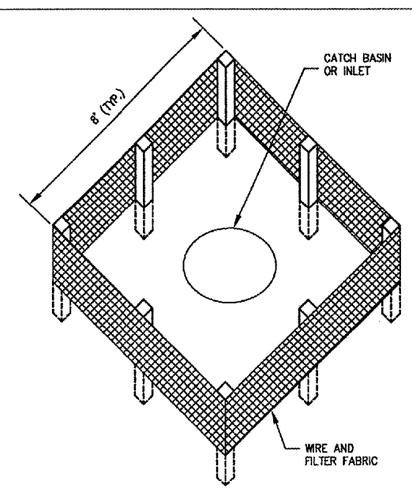

SILT FENCE PLACEMENT AT MANHOLES

NOTES:

1. FILTER FABRIC SHALL BE EMBEDDED 8" INTO THE SOIL.
2. INSPECTION SHALL BE FREQUENT AND REPAIR/REPLACEMENT SHALL BE MADE PROMPTLY AS NEEDED.
3. SILT FENCE SHALL BE REMOVED WHEN IT HAS SERVED ITS USEFULNESS SO AS NOT TO BLOCK OR IMPEDE STORM FLOW OR DRAINAGE. CONTRACTOR SHALL PLACE SEED AND MULCH AROUND STRUCTURES PER LANDSCAPING PLAN. COST OF REMOVAL SHALL BE INCLUDED IN THE CONTRACT UNIT PRICE FOR SILT FENCE.
4. AREAS DISTURBED OUTSIDE OF CONSTRUCTION LIMITS DURING PLACEMENT OF INLET PROTECTION TO BE REGRADED, SEEDED AND MULCHED, COST INCIDENTAL TO SILT FENCE.
5. FENCE AND POSTS SHALL BE REMOVED WHEN DIRECTED AT PROJECT END.

INLET PROTECTION DETAIL

STORM WATER POLLUTION PREVENTION NOTES

GENERAL

THE CONTRACTOR SHALL IMPLEMENT ALL PROVISIONS OF THE CONTRACT DOCUMENTS TO ASSURE THAT STORM WATER POLLUTION PREVENTION ITEMS ARE CONSTRUCTED AND MAINTAINED IN A TIMELY MANNER. SEDIMENTATION MUST NOT BE TRANSPORTED OFF THE CONSTRUCTION SITE. PERMANENT DRAINAGE FEATURES AND VEGETATIVE MEASURES SHALL BE PROVIDED AS SOON AS POSSIBLE.

THE MAINTENANCE OF ALL STORM WATER POLLUTION PREVENTION MEASURES IS INCIDENTAL TO THE ASSOCIATED ITEM.

POLLUTION PREVENTION MEASURES

THE CONTRACTOR SHALL BE REQUIRED TO IMPLEMENT AND MAINTAIN STORM WATER POLLUTION PREVENTION PRACTICES AND MEASURES PRIOR TO THE STRIPPING OF EXISTING VEGETATION WHERE EVER POSSIBLE AND AS SOON AS CONSTRUCTION PERMITS IN OTHER AREAS. POLLUTION CONTROL MEASURES SHALL BE IN ACCORDANCE WITH THE CONTRACT DOCUMENTS, INCLUDING THESE CONSTRUCTION PLANS, AND WITH STANDARDS AND SPECIFICATIONS FOR SOIL EROSION AND SEDIMENT CONTROL, ILLINOIS ENVIRONMENTAL PROTECTION AGENCY, CURRENT ISSUE. THE CONTRACTOR SHALL ADJUST HIS OPERATIONS AND IMPLEMENT POLLUTION CONTROL MEASURES SO THAT NO RUNOFF FROM STRIPPED AREAS WILL LEAVE THE CONSTRUCTION SITE OTHER THAN THROUGH SEDIMENT TRAPS OR OTHER SUITABLE CONTROL MEASURES.

POLLUTION CONTROL ITEMS SHALL BE PROVIDED AS NOTED ON THE STORM WATER POLLUTION PREVENTION PLAN AND IN THE STORM WATER POLLUTION PREVENTION DETAILS AND AS DIRECTED BY THE ENGINEER. THE LIMITS OF SUCH MEASURES SHALL BE STAKED BY THE CONTRACTOR PRIOR TO THE COMMENCEMENT OF CONSTRUCTION. SUCH LIMITS MAY BE ADJUSTED BY THE ENGINEER TO ACCOUNT FOR ACTUAL SITE CONDITIONS EXPERIENCED DURING CONSTRUCTION. ADDITIONAL COMPENSATION FOR MEASURES EXCEEDING THE PLAN QUANTITIES WILL BE PAID FOR AT THE CONTRACT UNIT PRICE FOR EACH ITEM.

THE CONTRACTOR IS TO MAINTAIN AND ADJUST, REPAIR OR REPLACE ALL POLLUTION PREVENTION MEASURES AS REQUIRED OR AS DIRECTED BY THE ENGINEER UNTIL PERMANENT VEGETATION HAS BEEN ESTABLISHED. MAINTENANCE OF POLLUTION CONTROL MEASURES IS TO BE PROVIDED AT NO ADDITIONAL COST TO THE CONTRACT.

ADDITIONAL STORMWATER POLLUTION PREVENTION MEASURES ARE EXISTING ON SITE LOCATED AT DRAINAGE FACILITIES AND ALONG THE PROPERTY LINE.

DETAILS SHOWN ARE NOT TO SCALE

HANSON
HANSON PROFESSIONAL SERVICES INC.
815 Commerce Drive Suite 200
Oak Brook, Illinois 60523
Telephone: 630.990.3800
Fax: 630.990.3801

City of Dixon
CITY OF DIXON, ILLINOIS
Post Office Box 386
Dixon, Illinois 61021
Telephone: 815.288.1485

DIXON MUNICIPAL AIRPORT
CHARLES R. WALGREEN FIELD

OVERLAY TAXIWAYS B, D AND E:
REHABILITATE FRONTAGE APRON PAVEMENT

AIP PROJECT NO. 3-17-0036-B7
IDA PROJECT NO. C73-3436

No.	Drawing Issue Description	Date	By

Date
11 MARCH 2005

Sheet Title
STORMWATER POLLUTION PREVENTION PLAN

843-04B8007
Project Number

KLK	02/03/05
Layout By	Date
KLK,TMM	02/03/05
Designed By	Date
RMH	03/11/05
Reviewed By	Date
KLK	---- | ----
Drawn By	

Sheet No.
7

\04JOBS\03843\04B8007\DRAWINGS\SHEETS\07-SWPPP.DWG MAR 17, 2005 9:43AM KLK