STATE OF ILLINOIS
DEPARTMENT OF TRANSPORTATION

ROUTE NO.	SECTION	COUNTY	TOTAL SHEETS	SHEET NO.
FAS 944	*	ALEXANDER		9
FED. ROAD DIST. NO. 7	ILLINOIS	FED. AID PROJECT-		

SHEET NO. 6
13 SHEETS

* (138D-BR)1-5

Contract No. 98640

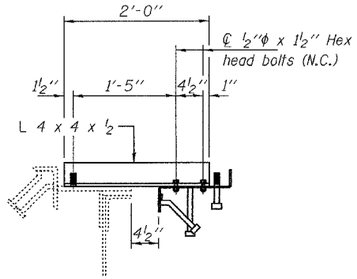

CROSS SECTION

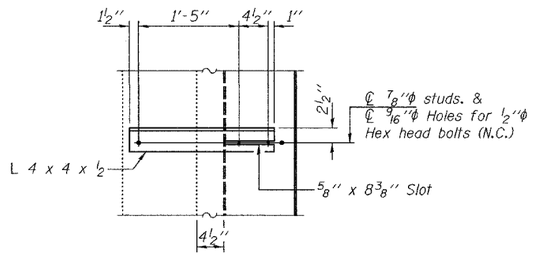

PLAN

ALIGNMENT ANGLE DETAIL

Note: Alignment System shall be in place prior to the deck pour and remain until the concrete has cured.

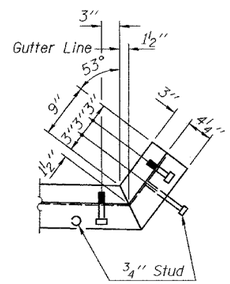

END FRAME TREATMENT

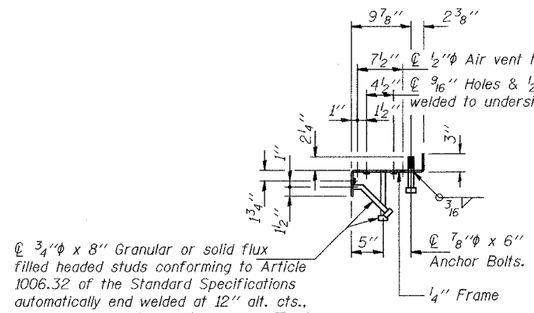

SIDE OPPOSITE FLOORBEAM

FRAME DETAIL

Cost of Frame is included with Neoprene Expansion Joint (6½")

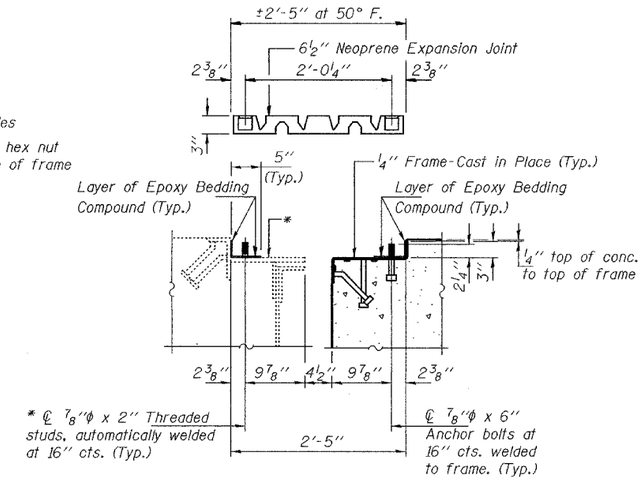

FLOORBEAM SIDE

SIDE OPPOSITE FLOORBEAM

SECTION THRU NEOPRENE EXPANSION JOINT (6½") (TRANSFLEX MODEL 650)

* After removal of the existing polymer concrete, all existing threaded studs welded to the top flange shall be removed, and the remaining weld shall be ground smooth. The steel surface shall be blast cleaned according to SSPC-SP10 and primed with organic zinc rich paint. Cost included with Neoprene Expansion Joint, 6½".

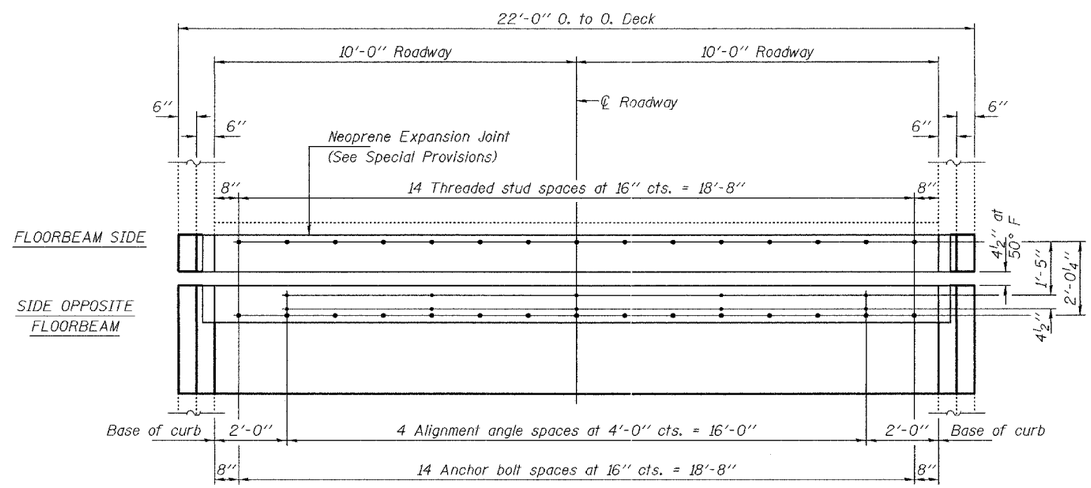

PLAN NEOPRENE EXPANSION JOINT

(Looking south at Pier A & Panel Points 15, 47 & 79. Pier H & Panel Points 23, 55 & 87 similar by rotation)

DESIGNED	DAB
CHECKED	JSB
DRAWN	baliva
CHECKED	DAB JSB

MARCH 14, 2005

EXAMINED John A. Morris
ENGINEER OF STRUCTURAL SERVICES

PASSED Ralph E. Anderson
ENGINEER OF BRIDGES AND STRUCTURES

BRIDGE REPAIRS
OLD CAIRO BRIDGE OVER MISSISSIPPI RIVER
FAS RTE. 944 (US 60 & 62)
SEC. (138D-BR)1-5
ALEXANDER COUNTY
SN 002-0005

\\Version 7 files\002005.cgn 3/14/2005 4:03:21 PM