93380

ROUTE NO.	SEC.	COUNTY	TOTAL SHEETS	SHEET NO.
FAS RTE 1588	*	ADAMS	20	14
FED. ROAD DIST. NO. 7	ILLINOIS	PROJECT		

* 04-00185-00-BR

SHEET NO. 6 OF 12

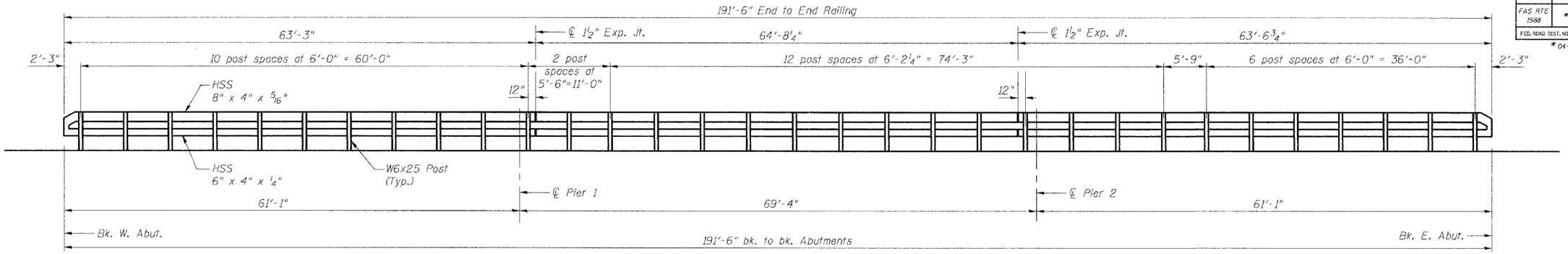

RAILING ELEVATION

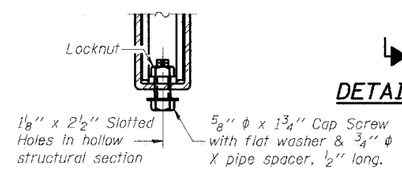

RAIL SPLICE CONNECTION AT EXPANSION JT.

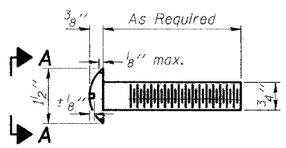

DETAIL OF ¾" ϕ ROUND HEAD BOLT

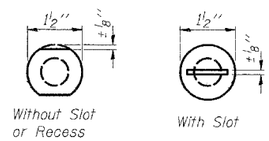

VIEW A-A

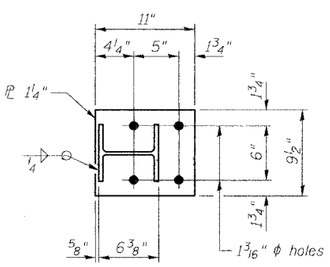

SECTION B-B

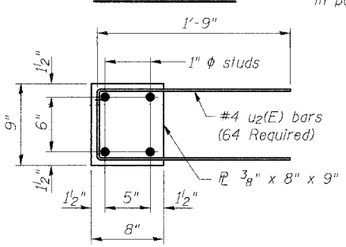

SECTION C-C

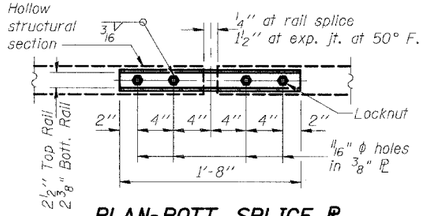

PLAN-BOTT. SPLICE ℄ TYPICAL

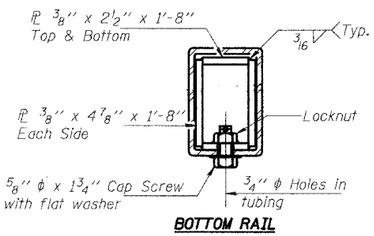

BOTTOM RAIL

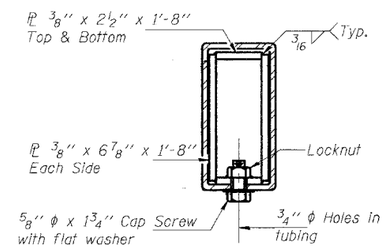

TOP RAIL

SECTIONS AT RAIL SPLICE

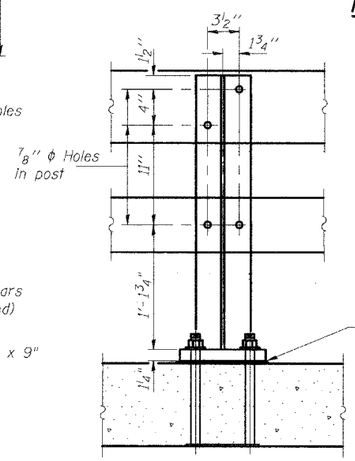

SECTION D-D

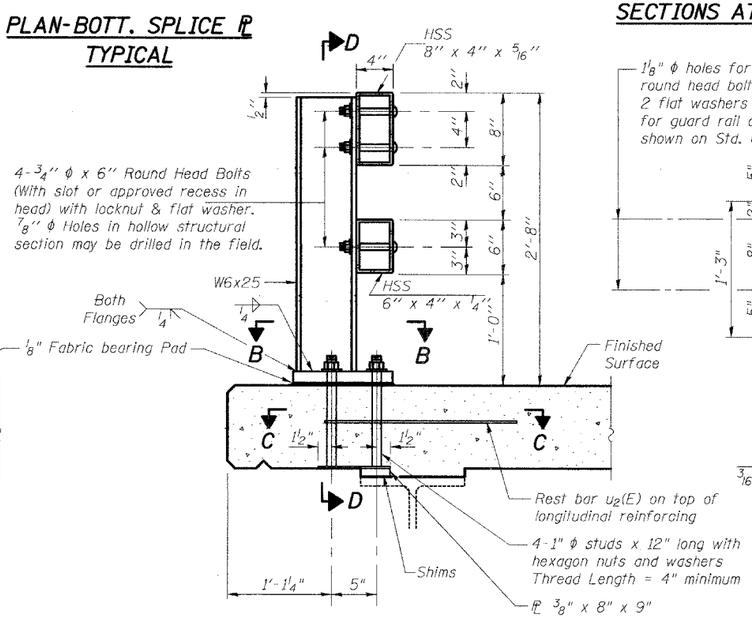

SECTION AT RAIL POST

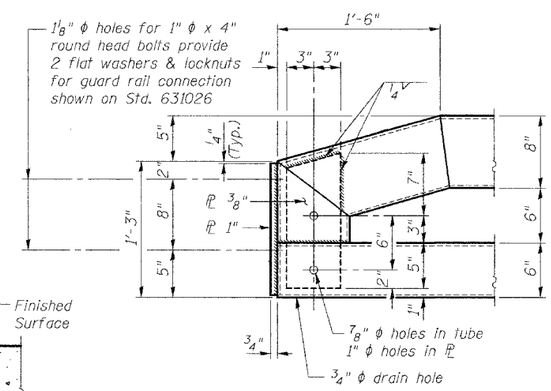

ELEVATION

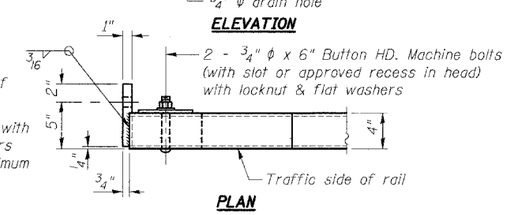

PLAN

END OF RAIL DETAILS

NOTES

Hollow structural sections shall conform to the requirements of ASTM designation A 500 Grade B Structural Steel Tubing and shall meet the longitudinal CVN requirements of 15 ft-lbs at 0° F.

All other steel shapes and plates shall conform to the requirements of AASHTO M 270 Grade 36 except posts shall conform to AASHTO M 270, Grade 50.

Bolts, cap screws, and nuts shall conform to the requirements of ASTM designation A 307 except for high strength bolts, nuts and washers noted which shall conform to AASHTO M 164.

All bolts, nuts, cap screws, washers and lock washers shall be galvanized according to AASHTO M 232.

All posts, railing, rail splices, anchor devices and angles shall be galvanized after shop fabrication according to AASHTO M 111 and ASTM A 385. Galvanized rail shall not be painted.

Railing shall be according to Section 509 of the Standard Specifications, except as noted, and will be paid for at the contract unit price per foot for Steel Bridge Rail (Special).

All field drilled holes shall be coated with an approved zinc rich paint before erection.

For multi-span bridges, sufficient ¼" x 6" x 1'-2" galvanized steel shims shall be provided to align rail between adjacent spans. Cost included with Steel Bridge Rail (Special).

All posts shall be cut on bottom to match deck slope. Posts shall be vertical.

u2(E) bars will be included with the railing post bracket no additional compensation will be considered.

The 1" ϕ bolts connecting the post base to the concrete deck shall be drawn up tight and the threads burred at the face of the nut with a pointed tool.

The lower portion of the post base in contact with concrete shall have ⅛" fabric bearing pads of same dimensions as section B-B between the plates and the concrete.

BILL OF MATERIAL

Item	Unit	Quantity
Steel Bridge Rail (Special)	FOOT	383

REV. NO.	DRAWN	CHKD.	APPD.	DESCRIPTION	DATE
	BGJ	WAW			03/04

F.A.S. RTE. 1588 OVER MCKEE CREEK
SECTION 04-00185-00-BR
Project RS-1588 (106)
ADAMS COUNTY

STEEL BRIDGE RAIL (SPECIAL)
STRUCTURE NUMBER 001-3026
STATION 314+60.75

9:01:57 AM 4/24/2004 pw:\04files\0400025\Bridge Plans\001-3026-Bridge.dgn