CITY OF MACOMB	
EAST GRANT STREET (F.A.U. 6921)	
SECTION 04-00135-00-RS	SH 7 OF 66
PROJECT M-5040 (007)	

CONTRACT NO. 89337

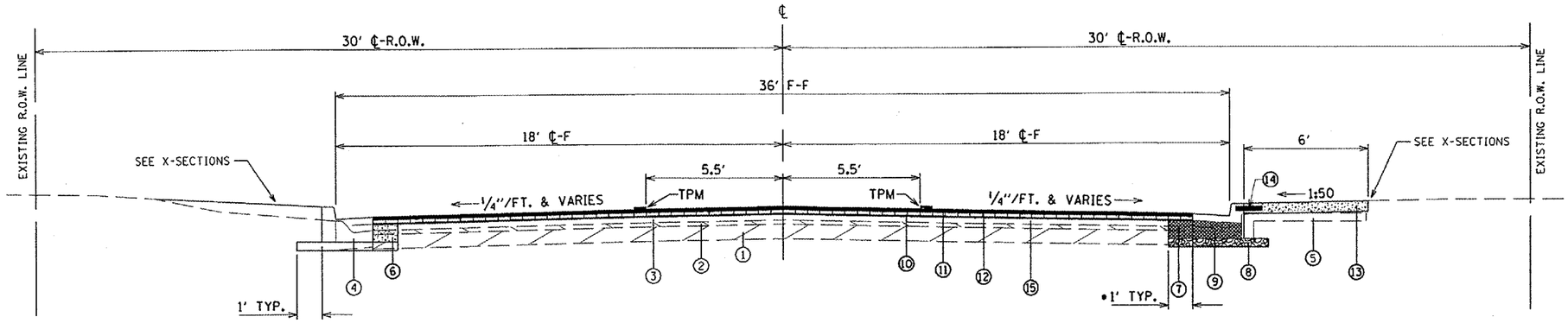

PREVIOUSLY CONSTRUCTED
AS SEC. 40 C.S.

PROPOSED TYPICAL SECTION - GRANT STREET

STA. 9+34.70 TO 13+00.00
(EXCEPT INTERSECTIONS AND TRANSITIONS)
NOT TO SCALE

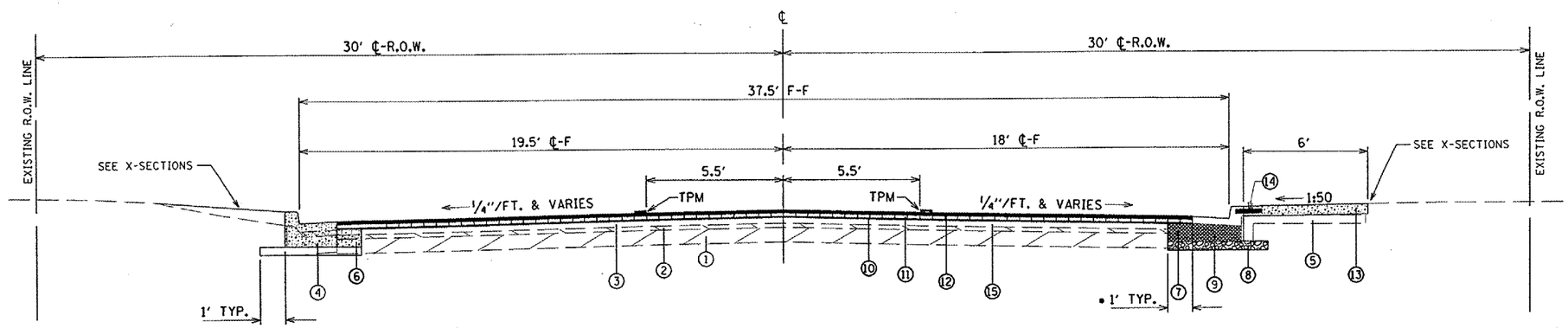

PREVIOUSLY CONSTRUCTED
AS SEC. 40 C.S.

PROPOSED TYPICAL SECTION - GRANT STREET

STA. 7+00.00 TO 9+34.70
(EXCEPT INTERSECTIONS AND TRANSITIONS)
NOT TO SCALE

• NOTE: UNLESS SHOWN OTHERWISE ON PLAN

① EXISTING CRUSHED STONE BASE COURSE, 7"
② EXISTING BITUMINOUS SURFACE, 2"
③ EXISTING BITUMINOUS SURFACE OVERLAY, 3"
④ EXISTING CONCRETE CURB & GUTTER (TO BE REMOVED) (LEFT SIDE)
⑤ EXISTING CONCRETE SIDEWALK (TO BE REMOVED)

⑥ PROPOSED P.C.C. BASE COURSE 9" (BOTH SIDES)
⑦ PROPOSED PAVEMENT REMOVAL (BOTH SIDES)
⑧ PROPOSED SUBBASE GRANULAR MATERIAL, TYPE B, 4" (BOTH SIDES)
⑨ PROPOSED COMB. CONCRETE CURB AND GUTTER, TYPE B-6.18 (BOTH SIDES)
⑩ PROPOSED AREA REFLECTIVE CRACK CONTROL TREATMENT
⑪ PROPOSED POLYMERIZED BIT., CONC. BINDER CSE., SUPERPAVE, IL-19.0, N50, 2¼"
⑫ PROPOSED POLYMERIZED BIT. CONC. SURF. CSE., SUPERPAVE, MIX "D", N50, 1½"
⑬ PROPOSED P.C. CONCRETE SIDEWALK, 5 INCH
⑭ PROPOSED #4 TIE BAR @ 30" O.C. TYP.
•• ⑮ PROPOSED BITUMINOUS SURFACE REMOVAL (VARIABLE DEPTH)

•• BITUMINOUS SURFACE REMOVAL SHALL BE AS LOCATED IN THE PLANS AND AS DIRECTED BY THE ENGINEER. MILLED AREAS SHALL HAVE A MINIMUM DEPTH OF 3" AT THE GUTTER FLAG AND CROSS SLOPE SHALL BE AS SHOWN IN THE PLANS.

DRAWN BY	M.G.M.
CHECKED BY	D.B.H.
APPROVED BY	W.J.S.
DATE	JANUARY, 2005

REVISIONS	
DATE	BY
FIELD BOOK	

TYPICAL SECTIONS
EAST GRANT STREET IMPROVEMENTS

MACOMB, ILLINOIS

BENTON & ASSOCIATES INC
Consulting Engineers / Land Surveyors
1970 West Lafayette Avenue
Jacksonville, Illinois 62650
Phone : 217-245-4146
Fax : 217-245-4149
IL Design Firm Registration No. 184-000852

SCALE: | JOB NO. 04e1466 | SHEET 7 OF 66