STATE OF ILLINOIS
DEPARTMENT OF TRANSPORTATION

ROUTE No.	SECTION	COUNTY	TOTAL SHEETS	SHEET NO.
FAI 74	*	TAZEWELL	1366	1318
STA.		TO STA.		
F.H.W.A. REGION		ILLINOIS	PROJECT	

*(90-1)R-2;90(13,14,14-1)R-1

CONTRACT NO. 68201

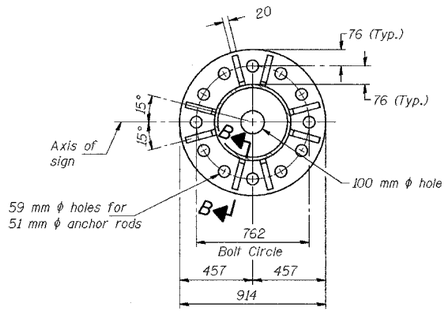

SECTION A-A

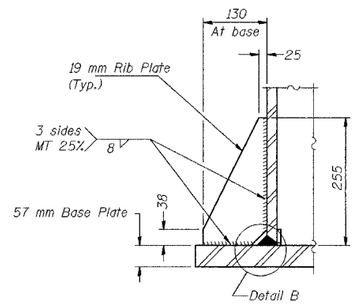

SECTION B-B

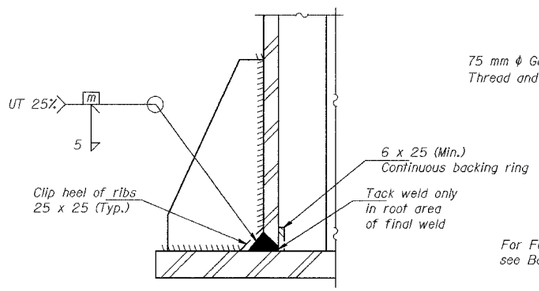

DETAIL B
(Typical rib)

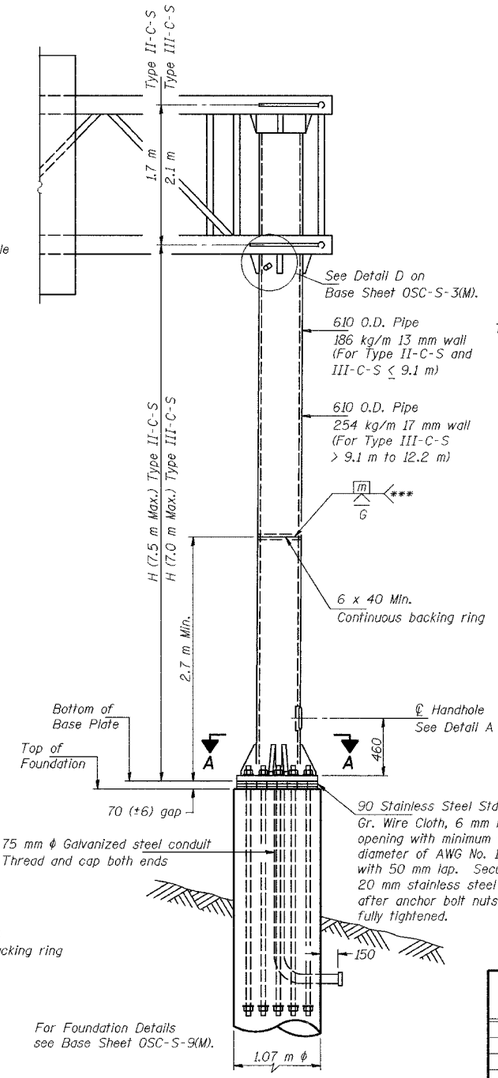

FRONT ELEVATION

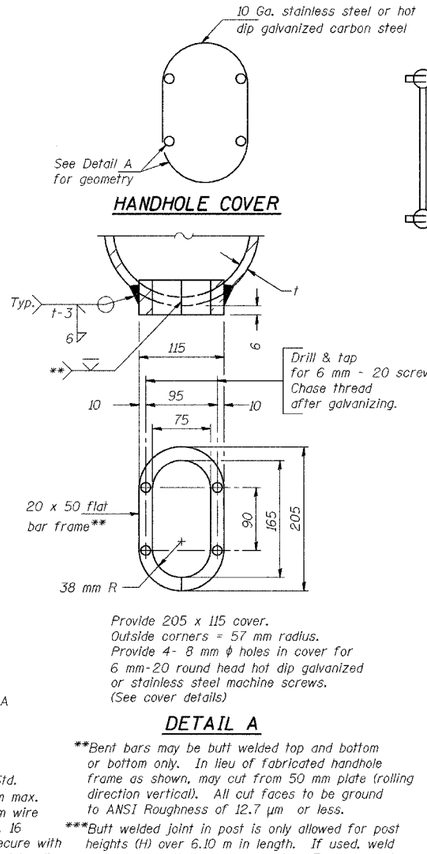

HANDHOLE COVER

DETAIL A

**Bent bars may be butt welded top and bottom or bottom only. In lieu of fabricated handhole frame as shown, may cut from 50 mm plate (rolling direction vertical). All cut faces to be ground to ANSI Roughness of 12.7 µm or less.

***Butt welded joint in post is only allowed for post heights (H) over 6.10 m in length. If used, weld procedure must be preapproved by Engineer and joint shall receive 100% RT or UT (tension criteria) at Contractor's expense.

SIDE ELEVATION

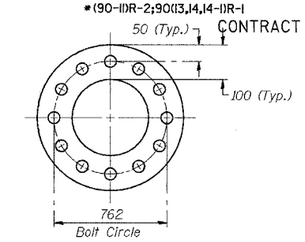

SUGGESTED POSITIONING PLATE

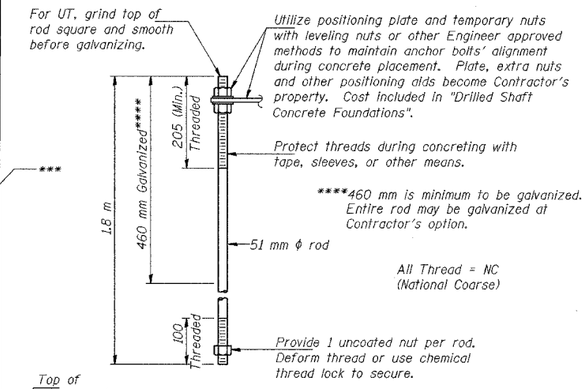

ANCHOR ROD DETAIL

Anchor rods shall conform to AASHTO M314 Grade 380 (55) and meet Charpy V-Notch (CVN) energy of 20 J at - 12 ° C. before galvanizing. Galvanize the upper 460 mm (minimum****) and associated M291, Grade A, C or DH heavy hex nuts and hardened washers per AASHTO M232. No welding shall be permitted on rods. Provide an unfinished nut at bottom, a hexagon locknut and washer above base plate and a leveling nut and washer below base plate. Nuts shall each be tightened with 270 N-m minimum torque against base plate. Before or after threading, but before galvanizing, each anchor rod shall be ultrasonically tested (UT) by a Level II or III inspector, qualified in accord with ANSI guidelines, using a straight beam, 13 mm ϕ 3.5 mhz. transducer, to insure no rejectable flaws exist in the upper 460 mm (tension criteria). Cost of testing included in "Drilled Shaft Concrete Foundations".

Structure Number	Station	H (m)
4C09010741095.6	153+772	6.067

DESIGNED	RJW
CHECKED	KJN
DRAWN	RJW
CHECKED	KJN

2004
EXAMINED
ENGINEER OF STRUCTURAL SERVICES
PASSED
ENGINEER OF BRIDGES AND STRUCTURES

NUMBER	REVISION	DATE

OSC-S-5(M) 10/1/2001

SIGNING SHEET 67 OF 74

CANTILEVER SIGN STRUCTURES
TYPE II-C-S & III-C-S TRUSS SUPPORT POST
STEEL TRUSS & STEEL POST

ILLINOIS DEPARTMENT OF TRANSPORTATION

SIGNING PLAN
W.B. I-74 STA. 153+772, S.N. 4C09010741095.6

TAZEWELL CO., IL. DATE: 12-20-04

M:/Proj3573/Sign Structures/Contract 11/spl102-TAcan-stl.dgn