STATE OF ILLINOIS
DEPARTMENT OF TRANSPORTATION

** Center of horizontal to center of splice dimension may vary. Verify before drilling holes in mounting tube.

ROUTE No.	SECTION	COUNTY	TOTAL SHEETS	SHEET NO.
FAI 74	*	TAZEWELL	1366	1306
STA.		TO STA.		
F.H.W.A. REGION		ILLINOIS	PROJECT	

* (90-11)R-2;90(13, 14, 14-1)R-1

CONTRACT NO. 68201

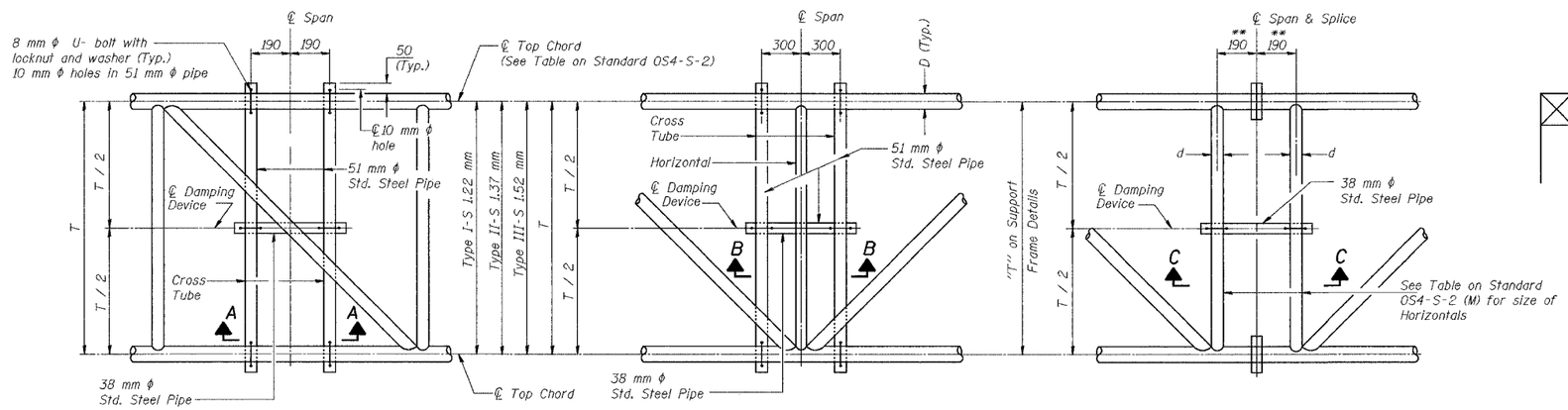

PLAN DETAIL "A"
℄ SPAN BETWEEN PANEL POINTS

PLAN DETAIL "B"
℄ SPAN AT PANEL POINT

PLAN DETAIL "C"
℄ SPAN AT ℄ CHORD SPLICE

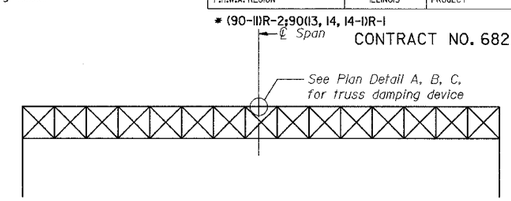

ELEVATION
Steel Overhead Sign Truss

NOTES

Damper: One damper per truss.
(14 Kg Stockbridge-Type)
Cost included in "Overhead Sign Structure..."

All dimensions are in millimeters (mm) except as noted

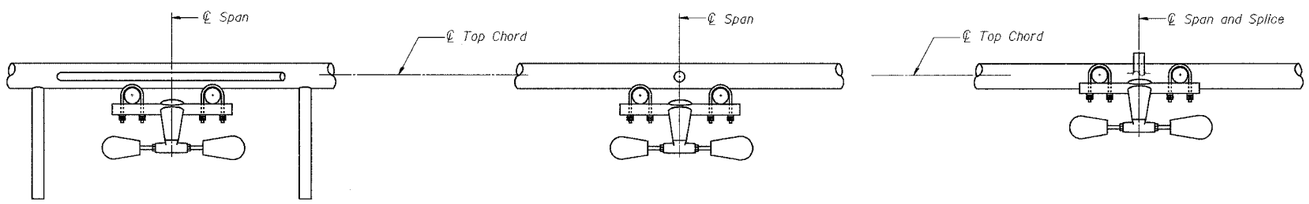

SECTION A-A

SECTION B-B

SECTION C-C

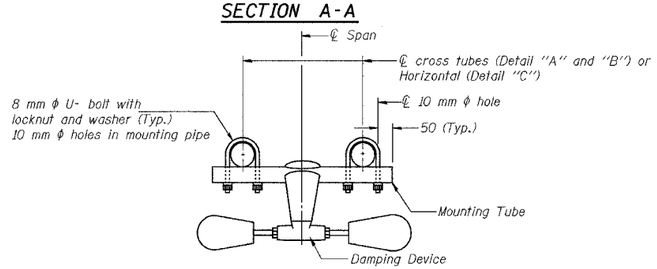

TRUSS DAMPING DEVICE CONNECTION DETAIL
(Typical)

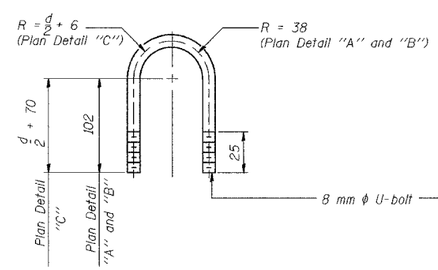

DAMPING DEVICE MOUNTING TUBE U-BOLT DETAIL
(Typical)

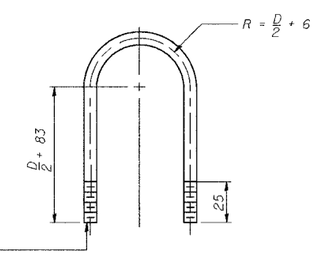

TOP CHORD TO CROSS TUBE U-BOLT DETAIL
(Typical - Detail "A" and "B")

DESIGNED	RJW
CHECKED	KJN
DRAWN	RJW
CHECKED	KJN

2004
EXAMINED
ENGINEER OF STRUCTURAL SERVICES
PASSED
ENGINEER OF BRIDGES AND STRUCTURES

OS-S-D(M) 10/1/2001

SIGNING SHEET 55 OF 74

OVERHEAD SIGN STRUCTURE
DAMPING DEVICE

ILLINOIS DEPARTMENT OF TRANSPORTATION

SIGNING PLAN
W.B. I-74 STA. 153+410, S.N. 4S090I074L095.3

TAZEWELL CO., IL.

DATE: 12-20-04

M:/Proj3573/Sign Structures/Contract 11/sp1101-7A0h-st1.dgn