68204

ROUTE NO.	SECTION	COUNTY	TOTAL SHEETS	SHEET NO.
F.A.I. 74	(90-14HB)BR	TAZEWELL	1366	538
FED. ROAD DIST. NO. 7		ILLINOIS	FED. AID PROJECT-	

STATE OF ILLINOIS
DEPARTMENT OF TRANSPORTATION

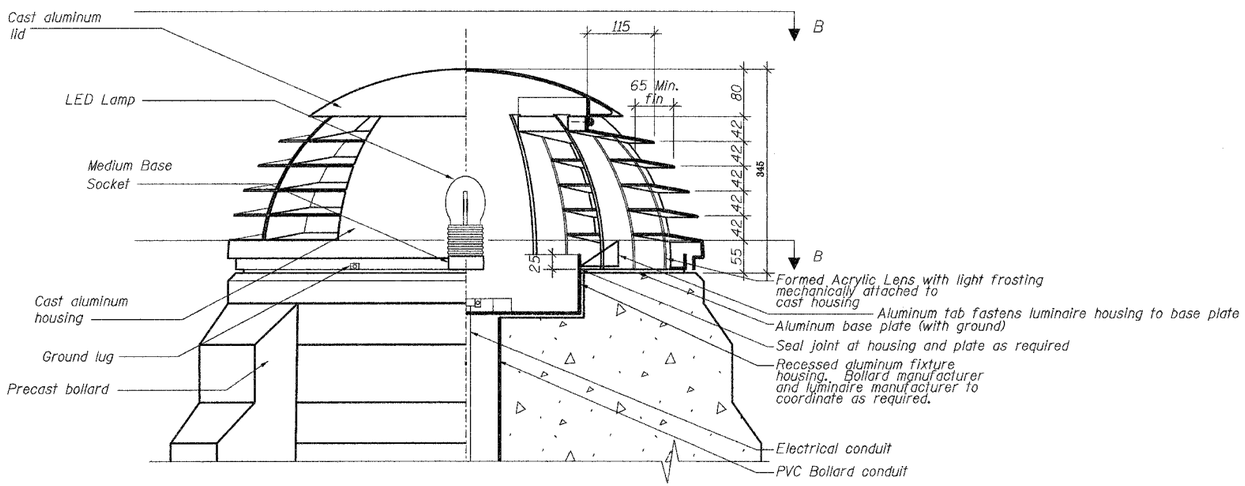

LONGITUDINAL ELEVATION/SECTION A-A

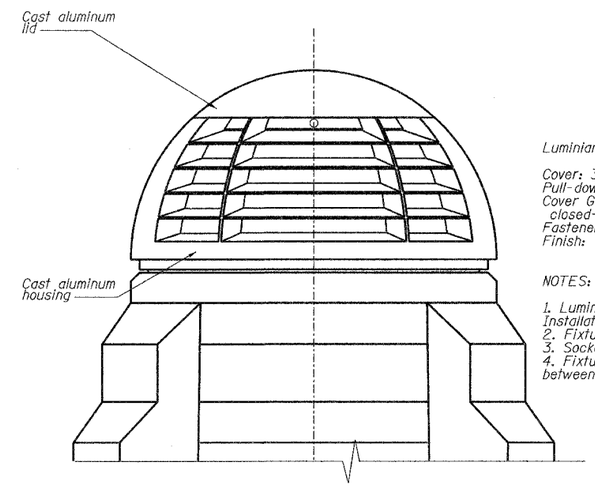

TRANSVERSE ELEVATION

Luminiare Specifications

Cover: 3 thick all aluminum construction
Pull-down catches and strikes: Stainless steel
Cover Gasket: 3 thick (die cut) high density closed-cell EPDM with P.S.A. backing
Fasteners: Stainless steel, cast-in-place Heli-Coil
Finish: Factory applied - silver metallic

NOTES:

1. Luminaire supplied by others. Installation in this contract.
2. Fixture to Bear "U.L." Label" suitable for wet locations"
3. Socket to be supplied with disconnect plugs.
4. Fixture supplied with vinyl coated stainless steel safety cable between cast aluminum lid and baseplate.

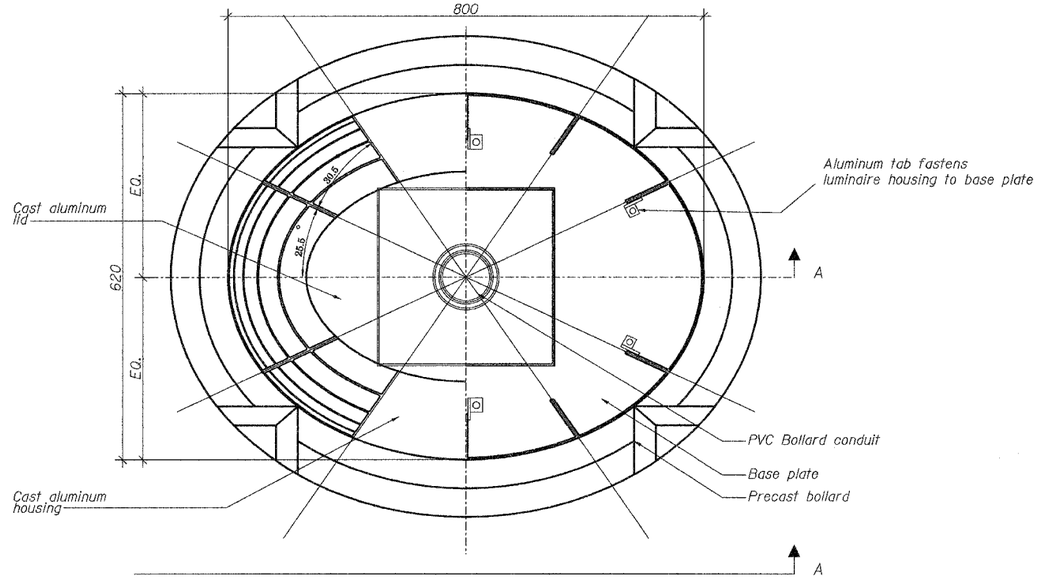

PLAN/SECTION B-B

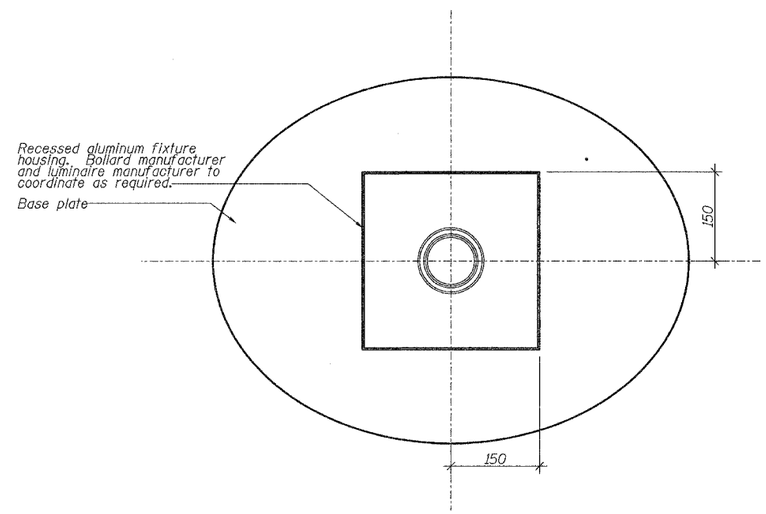

PLAN

DESIGNED	WCJ
CHECKED	BRJ
DRAWN	AS, ZLA
CHECKED	BRJ

LUMINAIRE DETAILS ON BOLLARDS AND APPLICATION

Date
Revisions

Designed
Drawn
Checked
Approved

INTERSTATE 74 AND RAMPS L-1 AND L-4 OVER
E. WASHINGTON STREET
F.A.I. RTE. 74 SECTION (90-14HB)BR
TAZEWELL COUNTY
STATION 153+868.540
STRUCTURE NO. 090-0163 (WB)

Sheet No. 21 of 28

Prepared By: URS 3040 North University Avenue Decatur, Il. 62526

URS Job No. 2100001243.01