STATE OF ILLINOIS
DEPARTMENT OF TRANSPORTATION

ROUTE NO.	SECTION	COUNTY	TOTAL SHEETS	SHEET NO.
F.A.I. 74	(90-13HVB)BY	TAZEWELL	1366	492
FED. ROAD DIST. NO. 7	ILLINOIS	FED. AID PROJECT-		

SHEET NO. 44
68 SHEETS

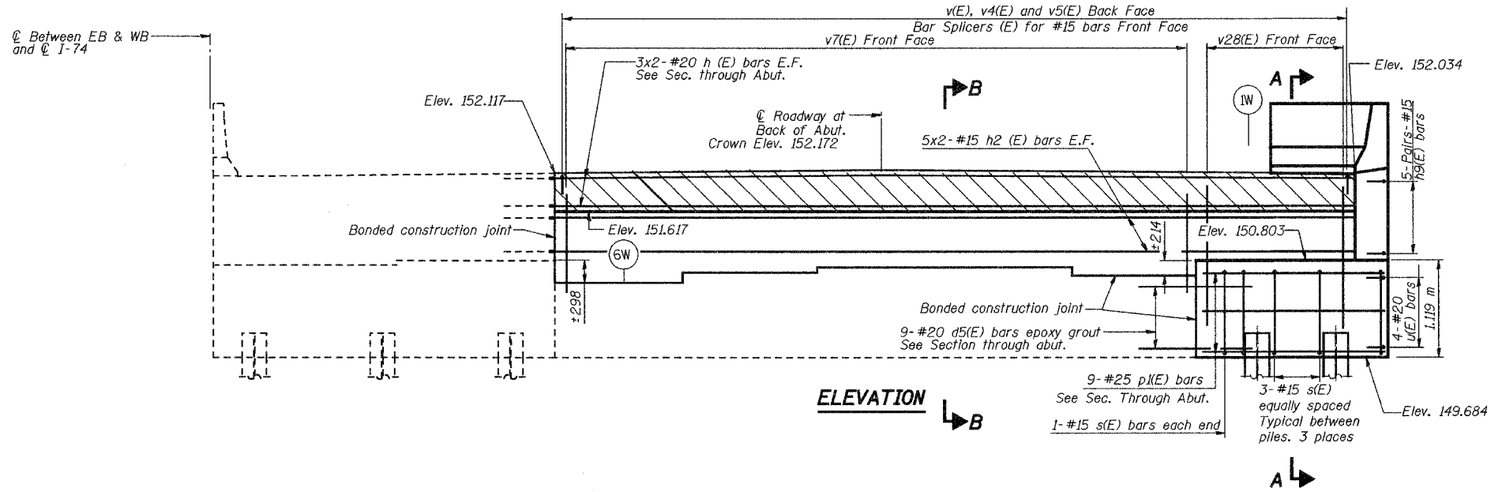

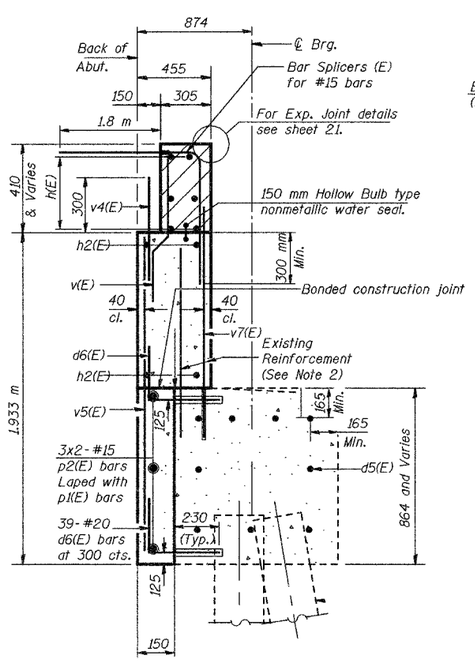

SECTION B-B
SEC. THRU ABUT.

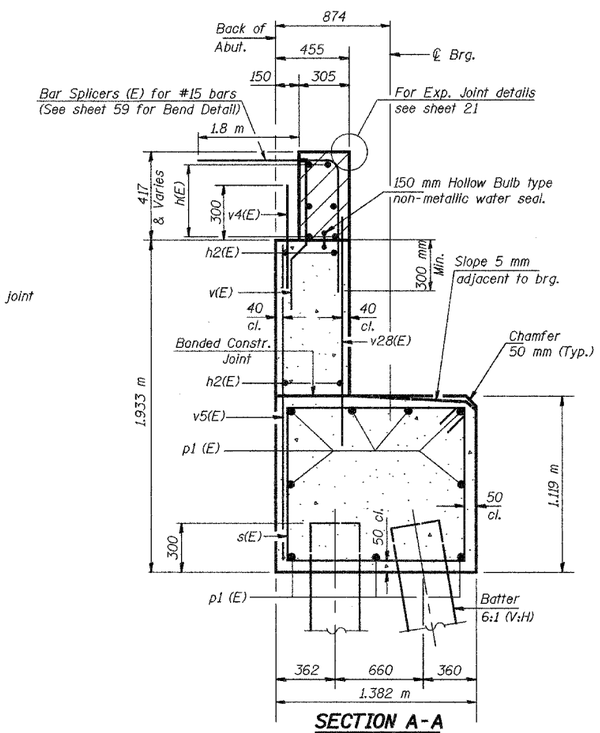

SECTION A-A
SEC. THRU ABUT.

Notes:

1. Remove Existing backwall down to top of Existing beam seat. Remove wingwalls, clean and provide Bonded Construction Joint at the back of the Abutment Cap. See Sht. 43 for details.
2. Existing reinforcement shall be cleaned, straightened and incorporated into the new construction.
3. Hatched area to be poured after superstructure falsework has been removed. Quantity of Concrete included with Concrete Superstructure.
4. Space reinforcement in cap to miss anchor bolts.
5. Reinforcement bars designated (E) shall be epoxy coated.
6. Epoxy grout bars d5(E), d6(E) & v7(E) in 230 mm minimum deep drilled holes in accordance with IDOT Standard Specification Section 584.
7. Lap length for #15 bar is 890 mm, #20 bars is 1.11 m, and #25 is 1.85 m.
8. See Sheet 45 for Bill of Materials and Bar Bend Details.
9. Bars indicated thus 20x3-#5 etc. indicates 20 lines of bars with 3 lengths per line.
10. Quantity of concrete in end posts included with Concrete Superstructure on sheet-18.
11. All dimensions are in millimeters (mm) except as noted.
12. Work this Sheet with Sheets 43 and 45.
13. Bonded Construction joint at interface between existing abutment and new extension shall be in accordance with Article 503.09(a)(2) of the Standard Specifications.
14. The remaining portions of the bar splicers provided for the WB backwall under EB contract shall be obtained from the Engineer by the Contractor and shall be incorporated in the WB abutment backwall reinforcement.

NORTH ABUTMENT EXTENSION ELEVATION

Date			
Revisions	Designed MR	WESTBOUND F.A.I. ROUTE 74 OVER CAMP STREET, FARM CREEK, AND TP&W RR F.A.I. RTE. 74 SECTION (90-13HVB)BY TAZEWELL COUNTY STATION 153+625.193 STRUCTURE NO. 090-0009	Sheet No. 44 of 68
	Drawn MR		
	Checked NPP		
	Approved NPP		
Prepared By: BRW, Inc. A Division of URS		1701 Golf Rd., Suite 1000 Rolling Meadows, IL.	BRW Job No. 17049-071

I:/projects*49071/pre_final_plans/I74_WB/st0944nabut2-5A0900009.dgn