ROUTE NO.	SECT.	COUNTY	SHEET NO.	TOTAL SHEETS
F.A.I. 74	(72-7) R-3	PEORIA	52.1	1360
FED. ROAD DIST. NO. 7		ILLINOIS	FED. AID PROJECT	

CONTRACT NO. 68200

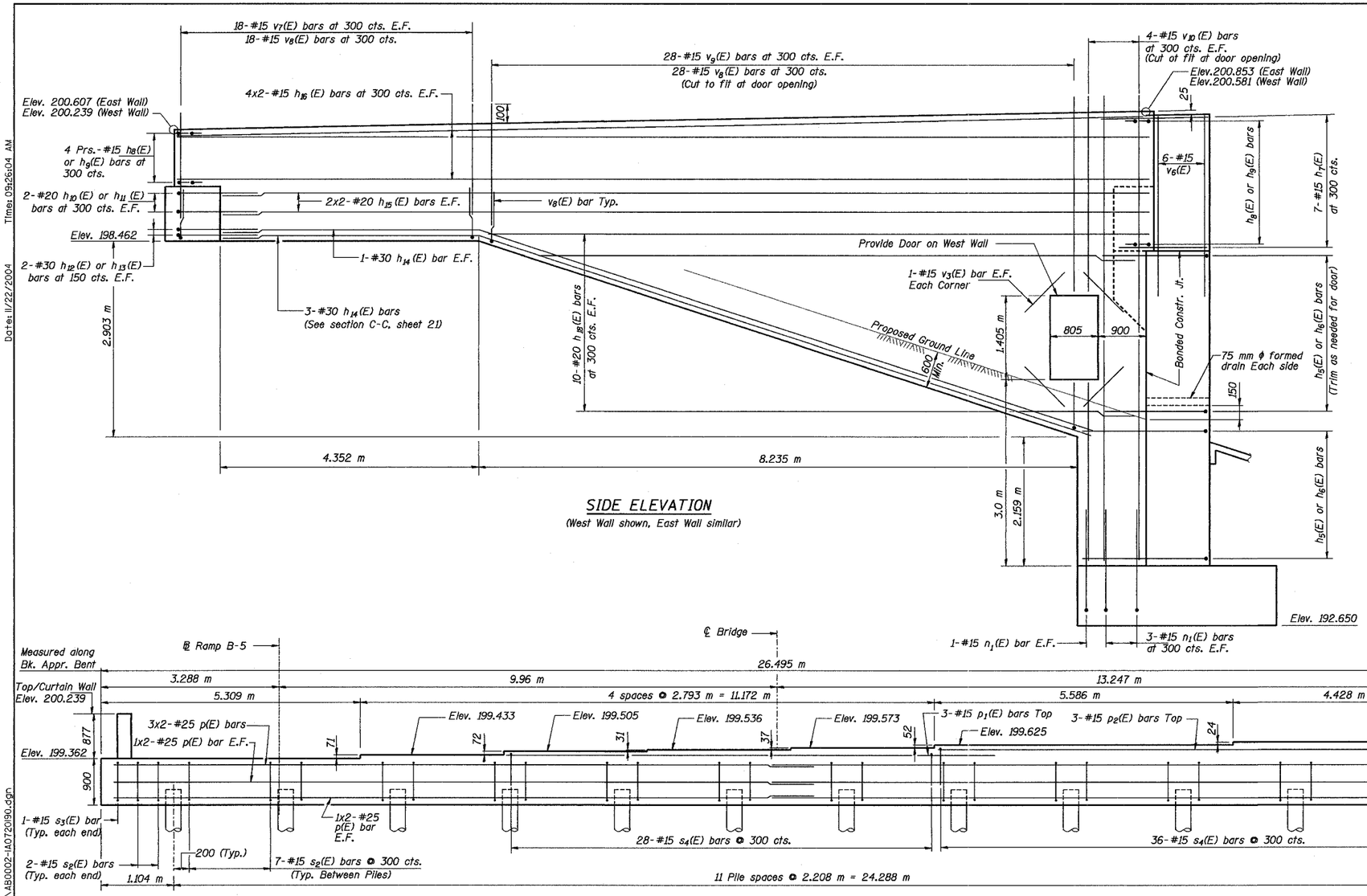

SIDE ELEVATION

(West Wall shown, East Wall similar)

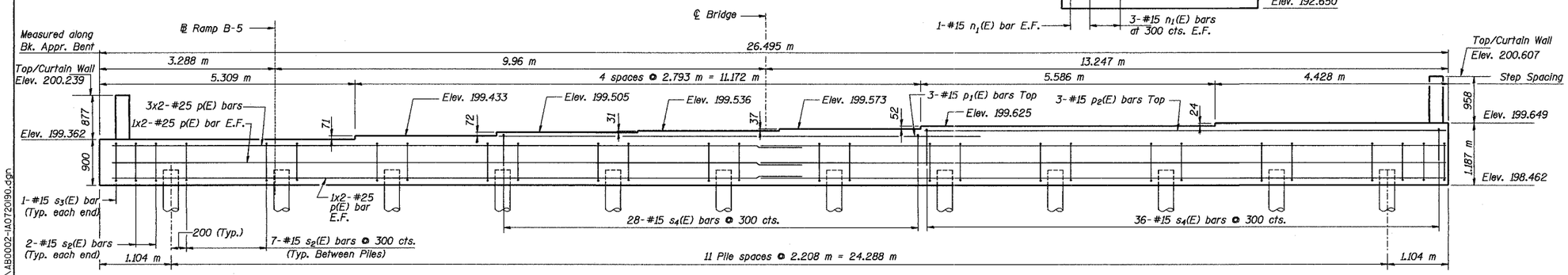

ELEVATION NORTH APPROACH BENT

(Looking North)
(Wall reinforcement not shown)

Notes:

Reinforcement bars designated (E) shall be epoxy coated.

Work this sheet with sheet 21.

Pour steps monolithically with cap.

All dimensions are in millimeters (mm) except as noted.

E.F. denotes each face.

Bars indicated thus 20 x 3-#15 etc. indicates 20 lines of bars with 3 lengths per line.

MIN. BAR LAP

#15 bar = 640
#20 bar = 790
#25 bar = 1.32 m
#30 bar = 1.85 m

REVISION	DATE	DESCRIPTION

STATE OF ILLINOIS
DEPARTMENT OF TRANSPORTATION

NORTH ABUTMENT DETAILS I

RAMPS B-3 AND B-5 OVER WAR MEMORIAL DR. AND RAMP B-6
F.A.I. ROUTE 74 SECTION (72-7) R-3
PEORIA COUNTY STA. 10+618.61 (RAMP B-3)
STA. 10+472.60 (RAMP B-5)
STRUCTURE NUMBER 072-0190

PARSONS TRANSPORTATION GROUP
CHICAGO, ILLINOIS

DRAWING NO.	SCALE	DATE	SHEET NO.
22	N.T.S.	2-21-03	22

Designed by:	MBQ
Checked by:	DL
Drafted by:	FTE
Checked by:	DL

Filename: P:\643996\structural\072-0190\sheet\Tracings\AB0002-1A0720190.dgn
Date: 11/22/2004 Time: 09:26:04 AM