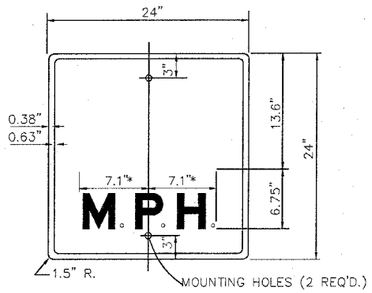

*INCREASE SPACING BY 100%

NOTE: NUMERALS TO BE OPTICALLY SPACED ABOUT VERTICAL CENTERLINE

SIGN W13-1

COLOR: BACKGROUND – *
BORDER AND LETTERS – BLACK
SIZE: 24" x 24"
LETTERING: LEGEND – 10" FEDERAL SERIES E
M.P.H. – 4" FEDERAL SERIES E
MOUNTING HOLES: 7/16 " DIAMETER, 2 HOLES, SPACED AS SHOWN

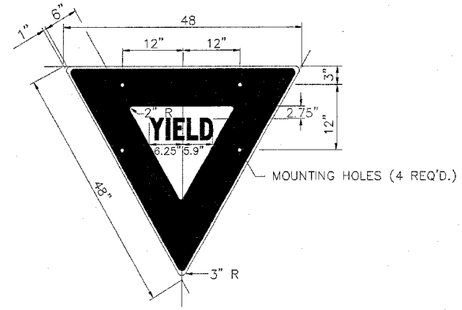

SIGN R1-2

COLOR: BACKGROUND – WHITE (REFLECTORIZED)(*A)
BORDER AND LETTERS – RED (REFLECTORIZED)(*A)
SIZE: 48" x 48"
LETTERING: 4" FEDERAL SERIES C
MOUNTING HOLES: 7/16 " DIAMETER, 4 HOLES, SPACED AS SHOWN

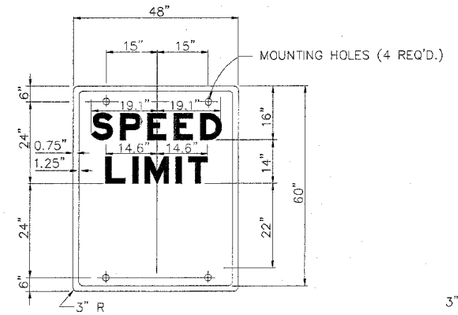

NOTE: NUMERALS TO BE OPTICALLY SPACED ABOUT VERTICAL CENTERLINE

SIGN R2-1

COLOR: BACKGROUND – WHITE (REFLECTORIZED)(*A)
BORDER AND LETTERS – BLACK
SIZE: 48" x 60"
LETTERING: 8" FEDERAL SERIES E, EXCEPT LEGEND WHICH IS 16" FEDERAL SERIES E
MOUNTING HOLES: 7/16 " DIAMETER, 4 HOLES, SPACED AS SHOWN

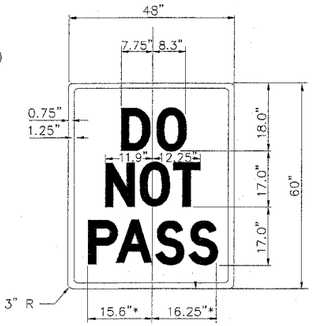

* REDUCE SPACING BY 40%

SIGN R4-1

COLOR: BACKGROUND – WHITE (REFLECTORIZED)(*A)
BORDER AND LETTERS – BLACK
SIZE: 48" x 60"
LETTERING: 8" FEDERAL SERIES E, EXCEPT LEGEND WHICH IS 16" FEDERAL SERIES E
MOUNTING HOLES: 7/16 " DIAMETER, 4 HOLES, SPACED AS SHOWN ON SIGN R2-1

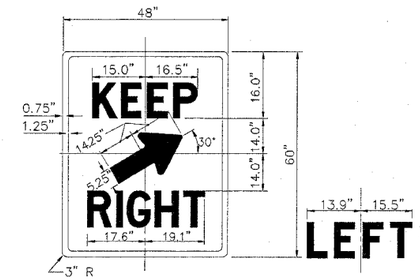

SIGN R4-7B & R4-8B

COLOR: BACKGROUND – WHITE (REFLECTORIZED)(*A)
BORDER AND LETTERS – BLACK
SIZE: 48" x 60"
LETTERING: 8" FEDERAL SERIES E, EXCEPT LEGEND WHICH IS 16" FEDERAL SERIES E
MOUNTING HOLES: 7/16 " DIAMETER, 4 HOLES, SPACED AS SHOWN ON SIGN R2-1

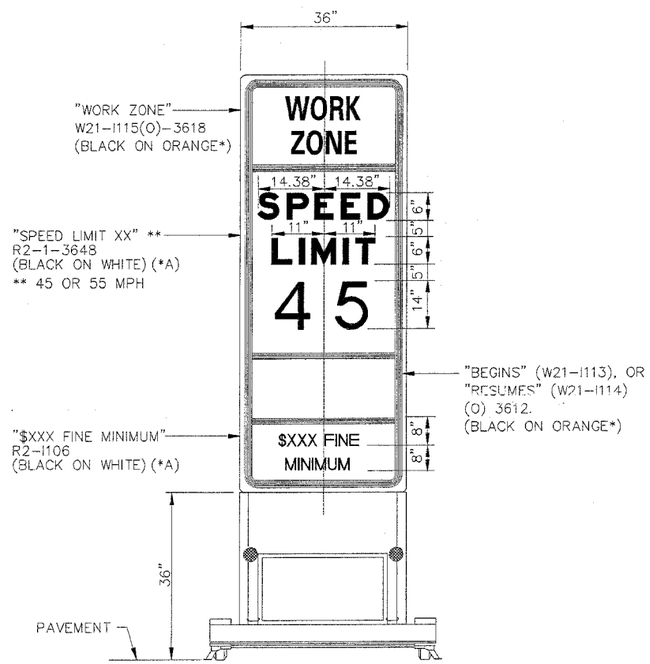

WORK ZONE SPEED LIMIT SIGN ASSEMBLY

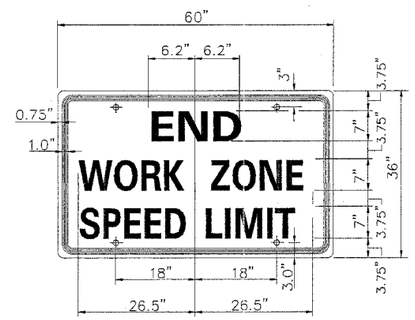

SIGN G20-I103

(BLACK ON ORANGE –*)
COLOR: BACKGROUND – ORANGE
BORDER AND LETTTERS – BLACK
SIZE: 60" x 36"
LETTERING: 6" FEDERAL SERIES C,
MOUNTING HOLES: 7/16 " DIAMETER, 4 HOLES, SPACED AS SHOWN

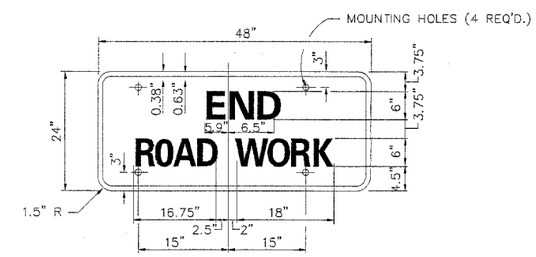

SIGN G20-2A

(BLACK ON ORANGE –*)
COLOR: BACKGROUND – ORANGE
BORDER AND LETTTERS – BLACK
SIZE: 48" x 24"
LETTERING: 6" FEDERAL SERIES C,
MOUNTING HOLES: 7/16 " DIAMETER, 4 HOLES, SPACED AS SHOWN

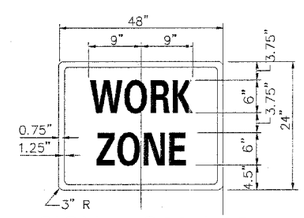

SIGN G20-I102

(BLACK ON ORANGE –*)
COLOR: BACKGROUND – ORANGE
BORDER AND LETTTERS – BLACK
SIZE: 48" x 24"
LETTERING: 6" FEDERAL SERIES C,
MOUNTING HOLES: 7/16 " DIAMETER, 4 HOLES, SPACED AS SHOWN ON SIGN G20-2A

NOTES:

(APPLY TO STANDARDS SD XX-11A, SD XX-11B & SD XX-11C)

1. ALL LETTERING IS DESIGNATED BY SIZE AND SERIES IN ACCORDANCE WITH THE LATEST EDITION OF "STANDARD ALPHABETS FOR HIGHWAY SIGNS AND PAVEMENT MARKINGS" AS PUBLISHED BY THE U.S. DEPARTMENT OF TRANSPORTATION. LETTERING SPACING SHALL BE IN ACCORDANCE WITH THIS GUIDE EXCEPT WHERE NOTED.
2. SYMBOLS AND ARROWS SHALL CONFORM TO THE DETAILS SHOWN IN THE LATEST EDITION OF "STANDARD HIGHWAY SIGNS" AS PUBLISHED BY THE U.S. DEPARTMENT OF TRANSPORTATION.
3. SEE THE CONTRACT REQUIREMENTS FOR ADDITIONAL NOTES AND SPECIFICATIONS.
   * – FLUORESCENT ORANGE TYPE A REFLECTIVE SHEETING PER STANDARD SPECIFICATION.
   (*A) – TYPE A REFLECTIVE SHEETING PER STANDARD SPECIFICATION.

APPROVED Jeff Daily CHIEF ENGINEER DATE 5-28-2004

CTE ENGINEERS
CONSOER TOWNSEND ENVIRODYNE ENGINEERS, INC.

THE ILLINOIS STATE TOLL HIGHWAY AUTHORITY
2700 OGDEN AVENUE
DOWNERS GROVE, ILLINOIS 60515

REVISIONS		
NO.	DATE	DESCRIPTION
1	6/1/04	REVISED SIGN ASSEMBLY
		DELETED CONSTRUCTION
		SPEED SIGN.

STANDARD SD 04-11C

CONSTRUCTION SIGNS III

DRAWING NO. E6 OF

file: //disk1hd1/shared/int.anet/internal/cdb/Web/Pdfs/tol: 11:04:48 6/14/2005