04–28–2023 LETTING ITEM 125

FOR INDEX OF SHEETS, SEE SHEET NO. 2
FOR SUMMARY OF QUANTITIES, SEE SHEET NO. 4 TO 13

F.A.P. RTE.	SECTION	COUNTY	TOTAL SHEETS	SHEET NO.
709	(113)RS-7	CHAMPAIGN	103	1
		ILLINOIS	CONTRACT NO. 70944	

STATE OF ILLINOIS
DEPARTMENT OF TRANSPORTATION

PROPOSED HIGHWAY PLANS

FAP ROUTE 709 (US 136)
SECTION (113)RS–7
PROJECT HBFP–STP–JPZU(954)
3P RESURFACING – STANDARD OVERLAY
ADA IMPROVEMENTS
BRIDGE DECK OVERLAY
CHAMPAIGN COUNTY

C–95–052–21
MAPLEWOOD DR IN RANTOUL TO E OF MAIN ST IN GIFFORD
AT BRANCH SALT FORK RIVER 3 MI E OF RANTOUL ECL

P-95-017-21

LOCATION OF SECTION INDICATED THUS:–

TRAFFIC DATA

FAP RTE. 709 / (US 136)

		LEG "A"	LEG "B"	LEG "C"	LEG "D"
2022 ADT	=	5,900	5,100	3,600	2,850
PV %	=	93.30%	93.80%	91.10%	91.90%
SU %	=	4.20%	2.70%	4.70%	4.90%
MU %	=	2.50%	3.50%	4.20%	3.20%

TRAFFIC DATA LOCATIONS
LEG "A" = US 136 FROM MAPLEWOOD DR TO LON DR.
LEG "B" = US 136 FROM LON DR TO TR 234A (1800E).
LEG "C" = US 136 FROM TR 234A (1800E) TO TR 272 (2100E).
LEG "D" = US 136 FROM TR 272 (2100E) TO MAIN ST (FAS 516) IN GIFFORD.

FUNCTIONAL CLASSIFICATION
MINOR ARTERIAL

STRUCTURE INFORMATION

S.N.	SCOPE OF WORK
010-0252	OMISSION
010-2019	OMISSION
010-0257	HMA INLAY
010-8069	HMA INLAY
010-8071	HMA INLAY
010-8169	HMA INLAY

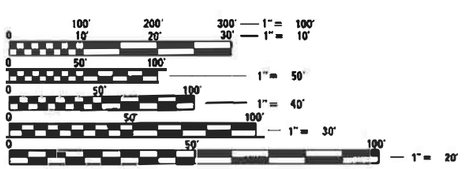

FULL SIZE PLANS HAVE BEEN PREPARED USING STANDARD ENGINEERING SCALES. REDUCED SIZED PLANS WILL NOT CONFORM TO STANDARD SCALES. IN MAKING MEASUREMENTS ON REDUCED PLANS, THE ABOVE SCALES MAY BE USED.

J.U.L.I.E.
JOINT UTILITY LOCATION INFORMATION FOR EXCAVATORS
1–800–892–0123 OR 811
TOWNSHIPS: LUDLOW, RANTOUL, HARDWOOD, COMPROMISE

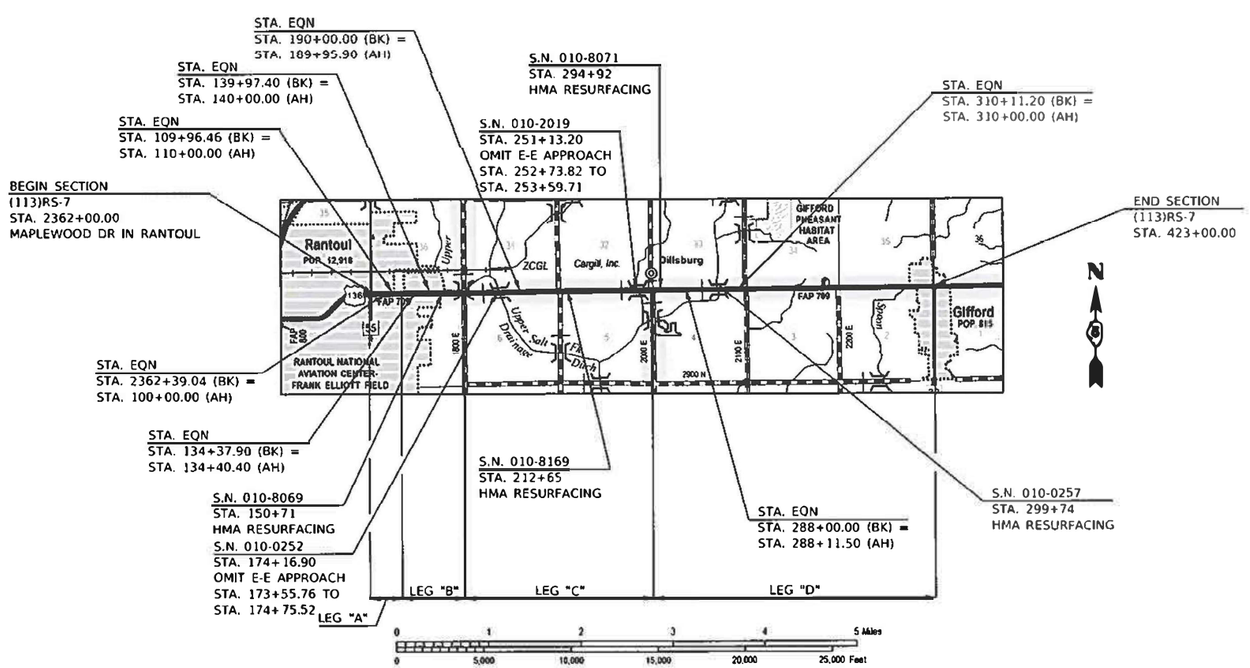

GROSS LENGTH = 32,334.20 FT. = 6.124 MILE
NET LENGTH = 32,128.55 FT. = 6.085 MILE

STATE OF ILLINOIS
DEPARTMENT OF TRANSPORTATION

SUBMITTED 1/26 20 23
Gerald A. Garrettson
REGIONAL ENGINEER

March 24, 2023
ENGINEER OF DESIGN AND ENVIRONMENT

March 24, 2023
Stephen McGrath
DIRECTOR OF HIGHWAYS PROJECT IMPLEMENTATION

PROJECT ENGINEER: RYAN T. CARROLL
DESIGNER: TYLER J. PIERSON
PHONE: (217)–465–4181

CONTRACT NO. 70944

PRINTED BY THE AUTHORITY OF THE STATE OF ILLINOIS

REV. 3/10/23

INDEX OF SHEETS

LIST OF STANDARDS

STANDARD NO.	DESCRIPTION
000001-08	STANDARD SYMBOLS, ABBREVIATIONS AND PATTERNS
001006	DECIMAL OF AN INCH AND OF A FOOT
280001-07	TEMPORARY EROSION CONTROL SYSTEMS
424001-11	PERPENDICULAR CURB RAMPS FOR SIDEWALKS
424006-05	DIAGONAL CURB RAMPS FOR SIDEWALKS
424011-04	CORNER PARALLEL CURB RAMPS FOR SIDEWALKS
424016-05	MID-BLOCK CURB RAMPS FOR SIDEWALKS
424021-06	DEPRESSED CORNER FOR SIDEWALKS
442201-03	CLASS C AND D PATCHES
542411	SLOPED METAL END SECTIONS FOR PIPE CULVERTS 15" (375 MM) THRU 60" (1500 MM) DIAMETER
542416	SLOPED METAL END SECTIONS FOR PIPE ARCH CULVERTS 15" (375 MM) THRU 72" (1800 MM) EQUIVALENT DIAMETER
606001-08	CONCRETE CURB TYPE B AND COMBINATION CONCRETE CURB AND GUTTER
642006-01	SHOULDER RUMBLE STRIPS, 8 IN.
667101-02	PERMANENT SURVEY MARKERS
701001-02	OFF-ROAD OPERATIONS, 2L, 2W, MORE THAN 15' (4.5 M) AWAY
701006-05	OFF-ROAD OPERATIONS, 2L, 2W, 15' (4.5 M) TO 24" (600 MM) FROM PAVEMENT
701011-04	OFF-ROAD MOVING OPERATIONS, 2L, 2W, DAY ONLY
701201-05	LANE CLOSURE, 2L, 2W, DAY ONLY, FOR SPEEDS > 45 MPH
701301-04	LANE CLOSURE, 2L, 2W, SHORT TIME OPERATIONS
701306-04	LANE CLOSURE, 2L, 2W, SLOW MOVING OPERATIONS DAY ONLY, FOR SPEEDS > 45
701311-03	LANE CLOSURE, 2L, 2W, MOVING OPERATIONS - DAY ONLY
701336-07	LANE CLOSURE, 2L, 2W, WORK AREAS IN SERIES, FOR SPEEDS > 45 MPH
701501-06	URBAN LANE CLOSURE, 2L, 2W, UNDIVIDED
701602-10	URBAN LANE CLOSURE, MULTILANE, 2W WITH BIDIRECTIONAL LEFT TURN LANE
701701-10	URBAN LANE CLOSURE, MULTILANE INTERSECTION
701801-06	SIDEWALK, CORNER OR CROSSWALK CLOSURE
701901-08	TRAFFIC CONTROL DEVICES
720016-04	MAST ARM MOUNTED STREET NAME SIGNS
780001-05	TYPICAL PAVEMENT MARKINGS
781001-04	TYPICAL APPLICATIONS RAISED REFLECTIVE PAVEMENT MARKERS
805001-01	ELECTRICAL SERVICE INSTALLATION DETAILS
814001-03	HANDHOLES
814006-03	DOUBLE HANDHOLES
821101-02	LUMINAIRE WIRING IN POLE
857001-01	STANDARD PHASE DESIGNATION DIAGRAMS AND PHASE SEQUENCES
862001-01	UNINTERRUPTABLE POWER SUPPLY (UPS)
873001-02	TRAFFIC SIGNAL GROUNDING & BONDING
876001-04	PEDESTRIAN PUSH BUTTON POST
877001-08	STEEL MAST ARM ASSEMBLY AND POLE 16' THROUGH 55'
877011-10	STEEL COMBINATION MAST ARM ASSEMBLY AND POLE 16' THROUGH 55'
878001-11	CONCRETE FOUNDATION DETAILS
880006-01	TRAFFIC SIGNAL MOUNTING DETAILS

COMMITMENTS

THERE ARE NO COMMITMENTS FOR THIS CONTRACT

GENERAL NOTES

G.N.-100A
ELECTRONIC FILES AND/OR ELECTRONIC SURVEY INFORMATION INCLUDING CADD FILES WILL NOT BE AVAILABLE TO THE CONTRACTOR.

G.N.-105.09A
ALL ELEVATIONS SHOWN IN THE PLANS ARE BASED ON NORTH AMERICAN VERTICAL DATUM OF 1988. (NAVD 88)

G.N. -406H

MIXTURE REQUIREMENTS

THE FOLLOWING MIXTURE REQUIREMENTS ARE APPLICABLE FOR THIS PROJECT:

Location	IL 136	IL 136	IL 136	IL 136
Mixture Use	Binder	Surface	Class D & P.D. Patch	Incidental
AC/PG	PG 64-22	PG 64-22	PG 64-22	PG 64-22
Design Air Voids	4.0% @ Ndes=50	4.0% @ Ndes=50	4.0% @ Ndes=50	4.0% @ Ndes=50
Mix Comp(Gradation)	IL 9.5 FG	IL 9.5	IL 19.0	IL 9.5
Friction Aggregate	N.A.	Mix C	N.A.	Mix C
Mixture Weight	112	112	112	112
Quality Management Program	PFP	PFP	QC/QA	QC/QA
Sublot Size	1000	1000	N.A.	N.A.

G.N. 406S

PROJECT POSTED SPEED LIMITS

THE FOLLOWING TABLE IS A LISTING OF POSTED SPEED LIMITS WITHIN THE PROJECT LIMITS. THE ENGINEER SHALL FIELD VERIFY THESE LIMITS:

STATION	TO	STATION	POSTED SPEED LIMIT (MPH)
2362+00	TO	111+00	35
111+00	TO	130+00	40
130+00	TO	143+00	45
143+00	TO	209+00	55
209+00	TO	255+00	45
255+00	TO	408+00	55
408+00	TO	423+00	45

G.N.-408B
THE INCIDENTAL HOT-MIX ASPHALT SURFACING SHALL BE COMPACTED AS REQUIRED BY THE SPECIFICATIONS FOR DESIGN NUMBER OF GYRATIONS BEING USED,

AT THE FOLLOWING LOCATIONS:
MAPLEWOOD DR.

G.N.-440B
THE EXISTING TIE BARS BETWEEN THE EXISTING PAVEMENT AND EXISTING MEDIANS, GUTTERS AND/OR COMBINATION CURB AND GUTTERS THAT ARE FOUND SUITABLE FOR REUSE SHALL BE CLEANED, STRAIGHTENED AND INCORPORATED INTO THE NEW CONSTRUCTION. ANY EXISTING TIE BARS THAT ARE FOUND UNSUITABLE TO BE INCORPORATED INTO THE PROPOSED CONSTRUCTION DUE TO EXCESSIVE RUSTING OR DISTRESS SHALL BE REMOVED FLUSH WITH THE FACE OF THE EXISTING CONCRETE AND DISPOSED OF OUTSIDE THE LIMITS OF THE RIGHT-OF-WAY IN ACCORDANCE WITH ARTICLE 202.03 OF THE STANDARD SPECIFICATIONS.

THIS WORK WILL NOT BE PAID FOR SEPARATELY BUT SHALL BE CONSIDERED INCLUDED IN THE VARIOUS REMOVAL PAY ITEMS AND NO ADDITIONAL COMPENSATION WILL BE ALLOWED.

G.N.- 542B
ALL THE ENTRANCE CULVERT LENGTHS SHOWN IN THE PLANS WERE CALCULATED WITH THE ASSUMPTION THAT METAL PIPES AND METAL END SECTIONS WOULD BE USED.

G.N.- 703A
SHORT TERM PAVEMENT MARKING SHALL BE APPLIED TO THE PAVEMENT AFTER ANY OF THE FOLLOWING: COLD MILLING AND/OR PLACING BITUMINOUS MATERIALS (TACK COAT), LEVELING BINDER (MACHINE METHOD), BINDER AND SURFACE COURSES. SHORT TERM PAVEMENT MARKING PLACED ON THE SURFACE SHALL COINCIDE WITH THE FINAL PAVEMENT STRIPING. SHORT TERM PAVEMENT MARKING PLACED PRIOR TO THE SURFACE SHALL COINCIDE WITH THE EXISTING PAVEMENT MARKINGS. USE 4 FEET PER 40 FEET (OR 10% PER STATION).

G.N.- 781
THE FINAL PAVEMENT MARKINGS SHALL BE IN PLACE PRIOR TO PLACING THE RAISED REFLECTIVE PAVEMENT MARKERS.

MATERIAL TRANSFER DEVICE (MTD) INFORMATION:

IF THE CONTRACTOR ELECTS TO USE AN MTD, THE FOLLOWING REQUIREMENTS WILL APPLY.

BASED ON STRUCTURAL ANALYSIS, THE FOLLOWING STRUCTURES CAN BE CROSSED WITH AN EMPTY MTD WITH THE FOLLOWING MAXIMUM GROSS WEIGHT RESTRICTIONS:

010-0252 (40 TONS)
010-0257 (40 TONS)
010-2019 (40 TONS)
010-8069 (40 TONS)
010-8071 (32 TONS)
010-8169 (40 TONS)

IF THE SAME MTD IS USED THROUGHOUT THE ENTIRE CONTRACT, THEN IT MUST BE LIMITED TO AN EMPTY GROSS WEIGHT OF 40 TONS OR LESS.

SUMMARY OF QUANTITIES

LOCATION OF WORK:	FAP 709 (US 136) MINOR ARTERIAL URBAN STA. 2362+00.00 STA. 153+82.71 CHAMPAIGN	FAP 709 (US 136) MINOR ARTERIAL RURAL STA. 153+82.71 STA. 423+00.00 CHAMPAIGN	FAP 709 (US 136) MINOR ARTERIAL RURAL STA. 299+49.50 STA. 299+98.50 CHAMPAIGN	FAP 709 (US 136) MINOR ARTERIAL URBAN STA. 2362+00.00 STA. 101+37.93 CHAMPAIGN	FAP 709 (US 136) MINOR ARTERIAL URBAN STA. 120+03.47 STA. 121+25.08 CHAMPAIGN	FAP 709 (US 136) MINOR ARTERIAL URBAN STA. 2362+00.00 STA. 101+37.93 CHAMPAIGN
FUNDING BREAKOUT:	80% FED / 20% STATE	80% FED / 20% STATE	80% FED / 20% STATE	80% FED / 10% STATE / 10% VILLAGE	80% FED / 20% VILLAGE	100% VILLAGE
CONSTRUCTION TYPE CODE:	0005	0005	0059	0021	0021	0021

CODE NO.	ITEM	UNIT	TOTAL QUANTITY	ROADWAY QUANTITY	ROADWAY QUANTITY	S.N. 010-0257 QUANTITY	MAPLEWOOD DR QUANTITY	LON DR QUANTITY	LUMINAIRES QUANTITY
20200100	EARTH EXCAVATION	CU YD	2,190.00		2,190.00				
25000210	SEEDING, CLASS 2A	ACRE	3.50		3.50				
25000400	NITROGEN FERTILIZER NUTRIENT	POUND	315.00		315.00				
25000500	PHOSPHORUS FERTILIZER NUTRIENT	POUND	315.00		315.00				
25000600	POTASSIUM FERTILIZER NUTRIENT	POUND	315.00		315.00				
25100125	MULCH, METHOD 3	ACRE	3.50		3.50				
28000250	TEMPORARY EROSION CONTROL SEEDING	POUND	1,400.00		1,400.00				
28000305	TEMPORARY DITCH CHECKS	FOOT	1,094.00		1,094.00				
28000500	INLET AND PIPE PROTECTION	EACH	84.00		84.00				
40200800	AGGREGATE SURFACE COURSE, TYPE B	TON	67.00		67.00				
40600290	BITUMINOUS MATERIALS (TACK COAT)	POUND	71,534.00	18,871.00	52,564.00	99.00			
40600370	LONGITUDINAL JOINT SEALANT	FOOT	51,072.00	24,356.00	26,716.00				
40600990	TEMPORARY RAMP	SQ YD	527.00	180.00	347.00				
40602965	HOT-MIX ASPHALT BINDER COURSE, IL-9.5FG, N50	TON	7,191.00	1,870.00	5,310.00	11.00			

* DENOTES SPECIALTY ITEM

MODEL: $MODELNAME$
FILE NAME: pw:\\ildot-pw.bentley.com:PWIDOT\Documents\IDOT Offices\District 5\Project\D570944\CADData\CADsheets\D570944-sht-Summary of Quantities.dgn

USER NAME = Tyler.Pierson	DESIGNED -	REVISED -	
	DRAWN -	REVISED -	
PLOT SCALE = 40.0000 ' / in.	CHECKED -	REVISED -	
PLOT DATE = 1/26/2023	DATE -	REVISED -	

STATE OF ILLINOIS
DEPARTMENT OF TRANSPORTATION

SUMMARY OF QUANTITIES

SCALE: | SHEET 1 OF 10 SHEETS | STA. TO STA.

F.A.P. RTE.	SECTION	COUNTY	TOTAL SHEETS	SHEET NO.
709	(113)RS-7	CHAMPAIGN	103	4

CONTRACT NO. 70944

ILLINOIS | FED. AID PROJECT

SUMMARY OF QUANTITIES

LOCATION OF WORK:	FAP 709 (US 136) MINOR ARTERIAL URBAN STA. 2362+00.00 STA. 153+82.71 CHAMPAIGN	FAP 709 (US 136) MINOR ARTERIAL RURAL STA. 153+82.71 STA. 423+00.00 CHAMPAIGN	FAP 709 (US 136) MINOR ARTERIAL RURAL STA. 299+49.50 STA. 299+98.50 CHAMPAIGN	FAP 709 (US 136) MINOR ARTERIAL URBAN STA. 2362+00.00 STA. 101+37.93 CHAMPAIGN	FAP 709 (US 136) MINOR ARTERIAL URBAN STA. 120+03.47 STA. 121+25.08 CHAMPAIGN	FAP 709 (US 136) MINOR ARTERIAL URBAN STA. 2362+00.00 STA. 101+37.93 CHAMPAIGN
FUNDING BREAKOUT:	80% FED / 20% STATE	80% FED / 20% STATE	80% FED / 20% STATE	80% FED / 10% STATE / 10% VILLAGE	80% FED / 20% VILLAGE	100% VILLAGE
CONSTRUCTION TYPE CODE:	0005	0005	0059	0021	0021	0021

	CODE NO.		ITEM	UNIT	TOTAL QUANTITY	ROADWAY QUANTITY	ROADWAY QUANTITY	S.N. 010-0257 QUANTITY	MAPLEWOOD DR QUANTITY	LON DR QUANTITY	LUMINAIRES QUANTITY
	40604050		HOT-MIX ASPHALT SURFACE COURSE, IL-9.5, MIX "C", N50	TON	8,730.00	2,345.00	6,372.00	13.00			
	40800029		BITUMINOUS MATERIALS (TACK COAT)	POUND	1,662.00	1,108.00	554.00				
	40800050		INCIDENTAL HOT-MIX ASPHALT SURFACING	TON	330.00	207.00	123.00				
	42300200		PORTLAND CEMENT CONCRETE DRIVEWAY PAVEMENT, 6 INCH	SQ YD	140.00		140.00				
	42400200		PORTLAND CEMENT CONCRETE SIDEWALK 5 INCH	SQ FT	797.00	797.00					
*	42400800		DETECTABLE WARNINGS	SQ FT	60.00	60.00					
	44000155		HOT-MIX ASPHALT SURFACE REMOVAL, 1 1/2"	SQ YD	1,370.00	766.00	604.00				
	44000160		HOT-MIX ASPHALT SURFACE REMOVAL, 2 3/4"	SQ YD	104,180.00	26,699.00	77,335.00	146.00			
	44000200		DRIVEWAY PAVEMENT REMOVAL	SQ YD	271.00		271.00				
	44000500		COMBINATION CURB AND GUTTER REMOVAL	FOOT	167.00	147.00	20.00				
	44000600		SIDEWALK REMOVAL	SQ FT	866.00	866.00					
	44201827		CLASS D PATCHES, TYPE II, 15 INCH	SQ YD	250.00	250.00					
	44201831		CLASS D PATCHES, TYPE III, 15 INCH	SQ YD	16.00	16.00					
	44201833		CLASS D PATCHES, TYPE IV, 15 INCH	SQ YD	380.00	380.00					

* DENOTES SPECIALTY ITEM

MODEL: $MODELNAME$
FILE NAME: pw:\\ildot-pw.bentley.com:PWIDOT\Documents\IDOT Offices\District 5\Project\D570944\CADData\CADsheets\D570944-sht-Summary of Quantities.dgn

USER NAME = Tyler.Pierson	DESIGNED -	REVISED -	
	DRAWN -	REVISED -	
PLOT SCALE = 40.0000 ' / in.	CHECKED -	REVISED -	
PLOT DATE = 1/26/2023	DATE -	REVISED -	

STATE OF ILLINOIS
DEPARTMENT OF TRANSPORTATION

SUMMARY OF QUANTITIES

SCALE: | SHEET 2 OF 10 SHEETS | STA. TO STA.

F.A.P. RTE.	SECTION	COUNTY	TOTAL SHEETS	SHEET NO.
709	(113)RS-7	CHAMPAIGN	103	5

CONTRACT NO. 70944

ILLINOIS | FED. AID PROJECT

REV. 3/20/23

SUMMARY OF QUANTITIES

LOCATION OF WORK:	FAP 709 (US 136) MINOR ARTERIAL URBAN STA. 2362+00.00 STA. 153+82.71 CHAMPAIGN	FAP 709 (US 136) MINOR ARTERIAL RURAL STA. 153+82.71 STA. 423+00.00 CHAMPAIGN	FAP 709 (US 136) MINOR ARTERIAL RURAL STA. 299+49.50 STA. 299+98.50 CHAMPAIGN	FAP 709 (US 136) MINOR ARTERIAL URBAN STA. 2362+00.00 STA. 101+37.93 CHAMPAIGN	FAP 709 (US 136) MINOR ARTERIAL URBAN STA. 120+03.47 STA. 121+25.08 CHAMPAIGN	FAP 709 (US 136) MINOR ARTERIAL URBAN STA. 2362+00.00 STA. 101+37.93 CHAMPAIGN
FUNDING BREAKOUT:	80% FED / 20% STATE	80% FED / 20% STATE	80% FED / 20% STATE	80% FED / 10% STATE / 10% VILLAGE	80% FED / 20% VILLAGE	100% VILLAGE
CONSTRUCTION TYPE CODE:	0005	0005	0059	0021	0021	0021

CODE NO.	ITEM	UNIT	TOTAL QUANTITY	ROADWAY QUANTITY	ROADWAY QUANTITY	S.N. 010-0257 QUANTITY	MAPLEWOOD DR QUANTITY	LON DR QUANTITY	LUMINAIRES QUANTITY
48102100	AGGREGATE WEDGE SHOULDER, TYPE B	TON	2,644.00	160.00	2,484.00				
48203100	HOT-MIX ASPHALT SHOULDERS	TON	116.00	65.00	51.00				
50105220	PIPE CULVERT REMOVAL	FOOT	1,327.00		1,327.00				
54260415	SLOPED METAL END SECTION, STANDARD 542411, 15", 1:4	EACH	42.00		42.00				
54260418	SLOPED METAL END SECTION, STANDARD 542411, 18", 1:4	EACH	12.00		12.00				
54260424	SLOPED METAL END SECTION, STANDARD 542411, 24", 1:4	EACH	10.00		10.00				
54260815	SLOPED METAL END SECTION, STANDARD 542416, 15", 1:4	EACH	8.00		8.00				
54260818	SLOPED METAL END SECTION, STANDARD 542416, 18", 1:4	EACH	2.00		2.00				
54260824	SLOPED METAL END SECTION, STANDARD 542416, 24", 1:4	EACH	4.00		4.00				
542D0220	PIPE CULVERTS, CLASS D, TYPE 1 15"	FOOT	785.00		785.00				
542D0223	PIPE CULVERTS, CLASS D, TYPE 1 18"	FOOT	222.00		222.00				
542D0229	PIPE CULVERTS, CLASS D, TYPE 1 24"	FOOT	262.00		262.00				
542D5470	PIPE CULVERTS, CLASS D, TYPE 1 EQUIVALENT ROUND-SIZE 15"	FOOT	105.00		105.00				
542D5473	PIPE CULVERTS, CLASS D, TYPE 1 EQUIVALENT ROUND-SIZE 18"	FOOT	42.00		42.00				

* DENOTES SPECIALTY ITEM

MODEL: $MODELNAME$
FILE NAME: pw:\\ildot-pw.bentley.com:PWIDOT\Documents\IDOT Offices\District 5\Project\D570944\CADData\CADsheets\D570944-sht-Summary of Quantities.dgn

USER NAME = Tyler.Pierson	DESIGNED -	REVISED -	
	DRAWN -	REVISED -	
PLOT SCALE = 40.0000 ' / in.	CHECKED -	REVISED -	
PLOT DATE = 1/26/2023	DATE -	REVISED -	

STATE OF ILLINOIS
DEPARTMENT OF TRANSPORTATION

SUMMARY OF QUANTITIES

SCALE: | SHEET 3 OF 10 SHEETS | STA. TO STA.

F.A.P. RTE.	SECTION	COUNTY	TOTAL SHEETS	SHEET NO.
709	(113)RS-7	CHAMPAIGN	103	6

CONTRACT NO. 70944

ILLINOIS | FED. AID PROJECT

SUMMARY OF QUANTITIES

LOCATION OF WORK:	FAP 709 (US 136) MINOR ARTERIAL URBAN STA. 2362+00.00 STA. 153+82.71 CHAMPAIGN	FAP 709 (US 136) MINOR ARTERIAL RURAL STA. 153+82.71 STA. 423+00.00 CHAMPAIGN	FAP 709 (US 136) MINOR ARTERIAL RURAL STA. 299+49.50 STA. 299+98.50 CHAMPAIGN	FAP 709 (US 136) MINOR ARTERIAL URBAN STA. 2362+00.00 STA. 101+37.93 CHAMPAIGN	FAP 709 (US 136) MINOR ARTERIAL URBAN STA. 120+03.47 STA. 121+25.08 CHAMPAIGN	FAP 709 (US 136) MINOR ARTERIAL URBAN STA. 2362+00.00 STA. 101+37.93 CHAMPAIGN
FUNDING BREAKOUT:	80% FED / 20% STATE	80% FED / 20% STATE	80% FED / 20% STATE	80% FED / 10% STATE / 10% VILLAGE	80% FED / 20% VILLAGE	100% VILLAGE
CONSTRUCTION TYPE CODE:	0005	0005	0059	0021	0021	0021

	CODE NO.		ITEM	UNIT	TOTAL QUANTITY	ROADWAY QUANTITY	ROADWAY QUANTITY	S.N. 010-0257 QUANTITY	MAPLEWOOD DR QUANTITY	LON DR QUANTITY	LUMINAIRES QUANTITY
	542D5479		PIPE CULVERTS, CLASS D, TYPE 1 EQUIVALENT ROUND-SIZE 24"	FOOT	45.00		45.00				
	60603800		COMBINATION CONCRETE CURB AND GUTTER, TYPE B-6.12	FOOT	20.00		20.00				
	60604900		COMBINATION CONCRETE CURB AND GUTTER, TYPE B-6.18 (VARIABLE WIDTH GUTTER FLAG)	FOOT	75.00	75.00					
	60605500		COMBINATION CONCRETE CURB AND GUTTER, TYPE B-6.24 (VARIABLE WIDTH GUTTER FLAG)	FOOT	70.00	70.00					
	64200108		SHOULDER RUMBLE STRIPS, 8 INCH	FOOT	3,746.00	1,935.00	1,811.00				
*	66900200		NON-SPECIAL WASTE DISPOSAL	CU YD	74.00		74.00				
*	66900530		SOIL DISPOSAL ANALYSIS	EACH	1.00		1.00				
*	66901001		REGULATED SUBSTANCES PRE-CONSTRUCTION PLAN	L SUM	1.00		1.00				
*	66901003		REGULATED SUBSTANCES FINAL CONSTRUCTION REPORT	L SUM	1.00		1.00				
*	66901006		REGULATED SUBSTANCES MONITORING	CAL DA	3.00		3.0				
	67000500		ENGINEER'S FIELD OFFICE, TYPE B	CAL MO	6.00	3.00	3.00				
	67100100		MOBILIZATION	L SUM	1.00	0.50	0.50				
	70100450		TRAFFIC CONTROL AND PROTECTION, STANDARD 701201	L SUM	1.00		1.00				
	70100460		TRAFFIC CONTROL AND PROTECTION, STANDARD 701306	L SUM	1.00		1.00				

* DENOTES SPECIALTY ITEM

MODEL: $MODELNAME$
FILE NAME: pw:\\ildot-pw.bentley.com:PWIDOT\Documents\IDOT Offices\District 5\Projects\D570944\CADData\CADsheets\D570944-sht-Summary of Quantities.dgn

USER NAME = Tyler.Pierson	DESIGNED -	REVISED -	STATE OF ILLINOIS DEPARTMENT OF TRANSPORTATION
	DRAWN -	REVISED -	
PLOT SCALE = 40.0000 ' / in.	CHECKED -	REVISED -	
PLOT DATE = 1/26/2023	DATE -	REVISED -	

SUMMARY OF QUANTITIES

SCALE: | SHEET 4 OF 10 SHEETS | STA. TO STA.

F.A.P. RTE.	SECTION	COUNTY	TOTAL SHEETS	SHEET NO.
709	(113)RS-7	CHAMPAIGN	103	7

CONTRACT NO. 70944

ILLINOIS | FED. AID PROJECT

REV. 3/20/23 REV. 3/13/23

SUMMARY OF QUANTITIES

LOCATION OF WORK:	FAP 709 (US 136) MINOR ARTERIAL URBAN STA. 2362+00.00 STA. 153+82.71 CHAMPAIGN	FAP 709 (US 136) MINOR ARTERIAL RURAL STA. 153+82.71 STA. 423+00.00 CHAMPAIGN	FAP 709 (US 136) MINOR ARTERIAL RURAL STA. 299+49.50 STA. 299+98.50 CHAMPAIGN	FAP 709 (US 136) MINOR ARTERIAL URBAN STA. 2362+00.00 STA. 101+37.93 CHAMPAIGN	FAP 709 (US 136) MINOR ARTERIAL URBAN STA. 120+03.47 STA. 121+25.08 CHAMPAIGN	FAP 709 (US 136) MINOR ARTERIAL URBAN STA. 2362+00.00 STA. 101+37.93 CHAMPAIGN
FUNDING BREAKOUT:	80% FED / 20% STATE	80% FED / 20% STATE	80% FED / 20% STATE	80% FED / 10% STATE / 10% VILLAGE	80% FED / 20% VILLAGE	100% VILLAGE
CONSTRUCTION TYPE CODE:	0005	0005	0059	0021	0021	0021

	CODE NO.		ITEM	UNIT	TOTAL QUANTITY	ROADWAY QUANTITY	ROADWAY QUANTITY	S.N. 010-0257 QUANTITY	MAPLEWOOD DR QUANTITY	LON DR QUANTITY	LUMINAIRES QUANTITY
	70100600		TRAFFIC CONTROL AND PROTECTION, STANDARD 701336	L SUM	1.00		1.00				
	70102632		TRAFFIC CONTROL AND PROTECTION, STANDARD 701602	L SUM	1.00	1.00					
	70102635		TRAFFIC CONTROL AND PROTECTION, STANDARD 701701	L SUM	1.00	1.00					
	70102640		TRAFFIC CONTROL AND PROTECTION, STANDARD 701801	L SUM	1.00	1.00					
	70300100		SHORT TERM PAVEMENT MARKING	FOOT	13,564.00	4,894.00	8,670.00				
	70300150		SHORT TERM PAVEMENT MARKING REMOVAL	SQ FT	5,027.00	2,027.00	3,000.00				
	70300211		TEMPORARY PAVEMENT MARKING LETTERS AND SYMBOLS - PAINT	SQ FT	422.00	422.00					
	70300221		TEMPORARY PAVEMENT MARKING - LINE 4"- PAINT	FOOT	79.758.00	15.080.00	64.678.00				
	70300241		TEMPORARY PAVEMENT MARKING - LINE 6"- PAINT	FOOT	1,374.00	1,114.00	260.00				
	70300261		TEMPORARY PAVEMENT MARKING - LINE 12"- PAINT	FOOT	392.00	262.00	130.00				
	70300281		TEMPORARY PAVEMENT MARKING - LINE 24"- PAINT	FOOT	304.00	304.00					
*	78000100		THERMOPLASTIC PAVEMENT MARKING - LETTERS AND SYMBOLS	SQ FT	422.00	422.00					
*	78000200		THERMOPLASTIC PAVEMENT MARKING - LINE 4"	FOOT	10,354.00	10,354.00					
*	78000400		THERMOPLASTIC PAVEMENT MARKING - LINE 6"	FOOT	1,374.00	1,114.00	260.00				

* DENOTES SPECIALTY ITEM

MODEL: $MODELNAME$
FILE NAME: pw:\\ildot-pw.bentley.com:PWIDOT\Documents\IDOT Offices\District 5\Project\D570944\CADData\CADsheets\D570944-sht-Summary of Quantities.dgn

USER NAME = Tyler.Pierson	DESIGNED -	REVISED -	STATE OF ILLINOIS DEPARTMENT OF TRANSPORTATION
	DRAWN -	REVISED -	
PLOT SCALE = 40.0000 ' / in.	CHECKED -	REVISED -	
PLOT DATE = 1/26/2023	DATE -	REVISED -	

SUMMARY OF QUANTITIES

SCALE: SHEET 5 OF 10 SHEETS STA. TO STA.

F.A.P. RTE.	SECTION	COUNTY	TOTAL SHEETS	SHEET NO.
709	(113)RS-7	CHAMPAIGN	103	8

CONTRACT NO. 70944

ILLINOIS FED. AID PROJECT

REV. 3/20/23

SUMMARY OF QUANTITIES

LOCATION OF WORK:	FAP 709 (US 136) MINOR ARTERIAL URBAN STA. 2362+00.00 STA. 153+82.71 CHAMPAIGN	FAP 709 (US 136) MINOR ARTERIAL RURAL STA. 153+82.71 STA. 423+00.00 CHAMPAIGN	FAP 709 (US 136) MINOR ARTERIAL RURAL STA. 299+49.50 STA. 299+98.50 CHAMPAIGN	FAP 709 (US 136) MINOR ARTERIAL URBAN STA. 2362+00.00 STA. 101+37.93 CHAMPAIGN	FAP 709 (US 136) MINOR ARTERIAL URBAN STA. 120+03.47 STA. 121+25.08 CHAMPAIGN	FAP 709 (US 136) MINOR ARTERIAL URBAN STA. 2362+00.00 STA. 101+37.93 CHAMPAIGN
FUNDING BREAKOUT:	80% FED / 20% STATE	80% FED / 20% STATE	80% FED / 20% STATE	80% FED / 10% STATE / 10% VILLAGE	80% FED / 20% VILLAGE	100% VILLAGE
CONSTRUCTION TYPE CODE:	0005	0005	0059	0021	0021	0021

	CODE NO.	ITEM	UNIT	TOTAL QUANTITY	ROADWAY QUANTITY	ROADWAY QUANTITY	S.N. 010-0257 QUANTITY	MAPLEWOOD DR QUANTITY	LON DR QUANTITY	LUMINAIRES QUANTITY
*	78000600	THERMOPLASTIC PAVEMENT MARKING - LINE 12"	FOOT	392.00	262.00	130.00				
*	78000650	THERMOPLASTIC PAVEMENT MARKING - LINE 24"	FOOT	304.00	304.00					
*	78001110	PAINT PAVEMENT MARKING - LINE 4"	FOOT	69,404.00	4,726.00	64,678.00				
*	78011000	GROOVING FOR RECESSED PAVEMENT MARKING, LETTERS AND SYMBOLS	SQ FT	422.00	422.00					
*	78011025	GROOVING FOR RECESSED PAVEMENT MARKING 5"	FOOT	10,614.00	10,354.00	260.00				
*	78011035	GROOVING FOR RECESSED PAVEMENT MARKING 7"	FOOT	1,114.00	1,114.00					
*	78011065	GROOVING FOR RECESSED PAVEMENT MARKING 13"	FOOT	392.00	262.00	130.00				
*	78011125	GROOVING FOR RECESSED PAVEMENT MARKING 25"	FOOT	304.00	304.00					
*	78100100	RAISED REFLECTIVE PAVEMENT MARKER	EACH	695.00	695.00					
	78300200	RAISED REFLECTIVE PAVEMENT MARKER REMOVAL	EACH	695.00	695.00					
	78300202	PAVEMENT MARKING REMOVAL - WATER BLASTING	SQ FT	28,696.00	6,876.00	21,820.00				
*	80500100	SERVICE INSTALLATION, TYPE A	EACH	1.00				1.00		
*	81028350	UNDERGROUND CONDUIT, PVC, 2" DIA.	FOOT	185.00				185.00		
*	81028360	UNDERGROUND CONDUIT, PVC, 2 1/2" DIA.	FOOT	64.00				64.00		

* DENOTES SPECIALTY ITEM

MODEL: $MODELNAME$
FILE NAME: pw:\\ildot-pw.bentley.com:PWIDOT\Documents\IDOT Offices\District 5\Project\D570944\CADData\CADsheets\D570944-sht-Summary of Quantities.dgn

USER NAME = Tyler.Pierson	DESIGNED -	REVISED -	
	DRAWN -	REVISED -	
PLOT SCALE = 40.0000 ' / in.	CHECKED -	REVISED -	
PLOT DATE = 1/26/2023	DATE -	REVISED -	

STATE OF ILLINOIS
DEPARTMENT OF TRANSPORTATION

SUMMARY OF QUANTITIES

SCALE: | SHEET 6 OF 10 SHEETS | STA. TO STA.

F.A.P. RTE.	SECTION	COUNTY	TOTAL SHEETS	SHEET NO.
709	(113)RS-7	CHAMPAIGN	103	9

CONTRACT NO. 70944

ILLINOIS | FED. AID PROJECT

REV. 3/20/23

SUMMARY OF QUANTITIES

			LOCATION OF WORK:	FAP 709 (US 136) MINOR ARTERIAL URBAN STA. 2362+00.00 STA. 153+82.71 CHAMPAIGN	FAP 709 (US 136) MINOR ARTERIAL RURAL STA. 153+82.71 STA. 423+00.00 CHAMPAIGN	FAP 709 (US 136) MINOR ARTERIAL RURAL STA. 299+49.50 STA. 299+98.50 CHAMPAIGN	FAP 709 (US 136) MINOR ARTERIAL URBAN STA. 2362+00.00 STA. 101+37.93 CHAMPAIGN	FAP 709 (US 136) MINOR ARTERIAL URBAN STA. 120+03.47 STA. 121+25.08 CHAMPAIGN	FAP 709 (US 136) MINOR ARTERIAL URBAN STA. 2362+00.00 STA. 101+37.93 CHAMPAIGN
			FUNDING BREAKOUT:	80% FED / 20% STATE	80% FED / 20% STATE	80% FED / 20% STATE	80% FED / 10% STATE / 10% VILLAGE	80% FED / 20% VILLAGE	100% VILLAGE
			CONSTRUCTION TYPE CODE:	0005	0005	0059	0021	0021	0021
	CODE NO.		ITEM	UNIT	TOTAL QUANTITY	ROADWAY QUANTITY	ROADWAY QUANTITY	S.N. 010-0257 QUANTITY	MAPLEWOOD DR QUANTITY	LON DR QUANTITY	LUMINAIRES QUANTITY
*	81028370		UNDERGROUND CONDUIT, PVC, 3" DIA.	FOOT	187.00				187.00		
*	81028390		UNDERGROUND CONDUIT, PVC, 4" DIA.	FOOT	116.00				116.00		
*	81400100		HANDHOLE	EACH	4.00				4.00		
*	81400300		DOUBLE HANDHOLE	EACH	1.00				1.00		
*	81702110		ELECTRIC CABLE IN CONDUIT, 600V (XLP-TYPE USE) 1/C NO. 10	FOOT	1,479.00						1,479.00
*	82110007		LUMINAIRE, LED, ROADWAY, OUTPUT DESIGNATION G	EACH	4.00						4.00
*	85700200		FULL-ACTUATED CONTROLLER AND TYPE IV CABINET	EACH	1.00				1.00		
*	86200200		UNINTERRUPTABLE POWER SUPPLY, STANDARD	EACH	1.00				1.00		
*	87301125		ELECTRIC CABLE IN CONDUIT, SIGNAL NO. 12 3C	FOOT	1,291.00				1,291.00		
*	87301135		ELECTRIC CABLE IN CONDUIT, SIGNAL NO. 12 4C	FOOT	325.00				325.00		
*	87301145		ELECTRIC CABLE IN CONDUIT, SIGNAL NO. 12 5C	FOOT	1,483.00				1,483.00		
*	87301155		ELECTRIC CABLE IN CONDUIT, SIGNAL NO. 12 7C	FOOT	1,436.00				1,436.00		
*	87301805		ELECTRIC CABLE IN CONDUIT, SERVICE, NO. 6 2 C	FOOT	32.00				32.00		
*	87301900		ELECTRIC CABLE IN CONDUIT, EQUIPMENT GROUNDING CONDUCTOR, NO. 6 1C	FOOT	529.00				529.00		

* DENOTES SPECIALTY ITEM

MODEL: $MODELNAME$
FILE NAME: pw:\\ildot-pw.bentley.com:PWIDOT\Documents\IDOT Offices\District 5\Project\D570944\CADData\CADsheets\D570944-sht-Summary of Quantities.dgn

USER NAME = Tyler.Pierson	DESIGNED -	REVISED -	STATE OF ILLINOIS DEPARTMENT OF TRANSPORTATION
	DRAWN -	REVISED -	
PLOT SCALE = 40.0000 ' / in.	CHECKED -	REVISED -	
PLOT DATE = 1/26/2023	DATE -	REVISED -	

SUMMARY OF QUANTITIES

SCALE: | SHEET 7 OF 10 SHEETS | STA. TO STA.

F.A.P. RTE.	SECTION	COUNTY	TOTAL SHEETS	SHEET NO.
709	(113)RS-7	CHAMPAIGN	103	10

CONTRACT NO. 70944

ILLINOIS | FED. AID PROJECT

REV. 3/20/23

SUMMARY OF QUANTITIES

LOCATION OF WORK:	FAP 709 (US 136) MINOR ARTERIAL URBAN STA. 2362+00.00 STA. 153+82.71 CHAMPAIGN	FAP 709 (US 136) MINOR ARTERIAL RURAL STA. 153+82.71 STA. 423+00.00 CHAMPAIGN	FAP 709 (US 136) MINOR ARTERIAL RURAL STA. 299+49.50 STA. 299+98.50 CHAMPAIGN	FAP 709 (US 136) MINOR ARTERIAL URBAN STA. 2362+00.00 STA. 101+37.93 CHAMPAIGN	FAP 709 (US 136) MINOR ARTERIAL URBAN STA. 120+03.47 STA. 121+25.08 CHAMPAIGN	FAP 709 (US 136) MINOR ARTERIAL URBAN STA. 2362+00.00 STA. 101+37.93 CHAMPAIGN
FUNDING BREAKOUT:	80% FED / 20% STATE	80% FED / 20% STATE	80% FED / 20% STATE	80% FED / 10% STATE / 10% VILLAGE	80% FED / 20% VILLAGE	100% VILLAGE
CONSTRUCTION TYPE CODE:	0005	0005	0059	0021	0021	0021

	CODE NO.		ITEM	UNIT	TOTAL QUANTITY	ROADWAY QUANTITY	ROADWAY QUANTITY	S.N. 010-0257 QUANTITY	MAPLEWOOD DR QUANTITY	LON DR QUANTITY	LUMINAIRES QUANTITY
*	87502640		TRAFFIC SIGNAL POST, ALUMINUM 10 FT.	EACH	3.00				3.00		
*	87502680		TRAFFIC SIGNAL POST, ALUMINUM 14 FT.	EACH	3.00				3.00		
*	87502700		TRAFFIC SIGNAL POST, ALUMINUM 16 FT.	EACH	1.00				1.00		
*	87702920		STEEL COMBINATION MAST ARM ASSEMBLY AND POLE 38 FT.	EACH	1.00				1.00		
*	87702940		STEEL COMBINATION MAST ARM ASSEMBLY AND POLE 42 FT.	EACH	1.00				1.00		
*	87702960		STEEL COMBINATION MAST ARM ASSEMBLY AND POLE 46 FT.	EACH	1.00				1.00		
*	87702970		STEEL COMBINATION MAST ARM ASSEMBLY AND POLE 48 FT.	EACH	1.00				1.00		
*	87800100		CONCRETE FOUNDATION, TYPE A	FOOT	21.70				21.70		
*	87800200		CONCRETE FOUNDATION, TYPE D	FOOT	3.50				3.50		
*	87800415		CONCRETE FOUNDATION, TYPE E 36-INCH DIAMETER	FOOT	50.00				50.00		
*	88040070		SIGNAL HEAD, POLYCARBONATE, LED, 1-FACE, 3-SECTION, BRACKET MOUNTED	EACH	4.00				4.00		
*	88040090		SIGNAL HEAD, POLYCARBONATE, LED, 1-FACE, 3-SECTION, MAST ARM MOUNTED	EACH	8.00				8.00		
*	88040110		SIGNAL HEAD, POLYCARBONATE, LED, 1-FACE, 4-SECTION, BRACKET MOUNTED	EACH	4.00				4.00		
*	88040120		SIGNAL HEAD, POLYCARBONATE, LED, 1-FACE, 4-SECTION, MAST ARM MOUNTED	EACH	4.00				4.00		

* DENOTES SPECIALTY ITEM

SUMMARY OF QUANTITIES

			LOCATION OF WORK:	FAP 709 (US 136) MINOR ARTERIAL URBAN STA. 2362+00.00 STA. 153+82.71 CHAMPAIGN	FAP 709 (US 136) MINOR ARTERIAL RURAL STA. 153+82.71 STA. 423+00.00 CHAMPAIGN	FAP 709 (US 136) MINOR ARTERIAL RURAL STA. 299+49.50 STA. 299+98.50 CHAMPAIGN	FAP 709 (US 136) MINOR ARTERIAL URBAN STA. 2362+00.00 STA. 101+37.93 CHAMPAIGN	FAP 709 (US 136) MINOR ARTERIAL URBAN STA. 120+03.47 STA. 121+25.08 CHAMPAIGN	FAP 709 (US 136) MINOR ARTERIAL URBAN STA. 2362+00.00 STA. 101+37.93 CHAMPAIGN
			FUNDING BREAKOUT:	80% FED / 20% STATE	80% FED / 20% STATE	80% FED / 20% STATE	80% FED / 10% STATE / 10% VILLAGE	80% FED / 20% VILLAGE	100% VILLAGE
			CONSTRUCTION TYPE CODE:	0005	0005	0059	0021	0021	0021
	CODE NO.		ITEM	UNIT	TOTAL QUANTITY	ROADWAY QUANTITY	ROADWAY QUANTITY	S.N. 010-0257 QUANTITY	MAPLEWOOD DR QUANTITY	LON DR QUANTITY	LUMINAIRES QUANTITY
*	88102825		PEDESTRIAN SIGNAL HEAD, POLYCARBONATE, LED, 1-FACE, BRACKET MOUNTED WITH COUNT DOWN TIMER	EACH	8.00				8.00		
*	88200210		TRAFFIC SIGNAL BACKPLATE, LOUVERED, ALUMINUM	EACH	20.00				20.00		
*	89502375		REMOVE EXISTING TRAFFIC SIGNAL EQUIPMENT	EACH	2.00	1.00			1.00		
*	89502380		REMOVE EXISTING HANDHOLE	EACH	10.00	4.00			6.00		
*	89502382		REMOVE EXISTING DOUBLE HANDHOLE	EACH	2.00	1.00			1.00		
*	89502385		REMOVE EXISTING CONCRETE FOUNDATION	EACH	18.00	8.00			10.00		
	X0300010		BITUMINOUS MATERIALS (FOG SEAL)	POUND	7,291.00	423.00	6,868.00				
*	X1400326		RECTANGULAR RAPID FLASHING BEACON ASSEMBLY (COMPLETE)	EACH	2.00					2.00	
*	X1400399		VIDEO DETECTION SYSTEM COMPLETE	EACH	1.00				1.00		
	X4400196		HOT-MIX ASPHALT SURFACE REMOVAL (SPECIAL)	SQ YD	3,559.00	2,462.00	1,097.00				
*	X8710036		FIBER OPTIC CABLE 12 FIBERS, SINGLE MODE	FOOT	71.00				71.00		
*	X8710103		ETHERNET SWITCH	EACH	1.00				1.00		
*	X8760100		PEDESTRIAN PUSH-BUTTON POST, UNPAINTED ALUMINUM, TYPE II	EACH	6.00				6.00		
*	X8760200		ACCESSIBLE PEDESTRIAN SIGNALS	EACH	8.00				8.00		

* DENOTES SPECIALTY ITEM

MODEL: $MODELNAME$
FILE NAME: pw:\\ildot-pw.bentley.com:PWIDOT\Documents\IDOT Offices\District 5\Project\D570944\CADData\CADsheets\D570944-sht-Summary of Quantities.dgn

USER NAME = Tyler.Pierson	DESIGNED -	REVISED -	STATE OF ILLINOIS DEPARTMENT OF TRANSPORTATION
	DRAWN -	REVISED -	
PLOT SCALE = 40.0000 ' / in.	CHECKED -	REVISED -	
PLOT DATE = 1/26/2023	DATE -	REVISED -	

SUMMARY OF QUANTITIES

SCALE: SHEET 9 OF 10 SHEETS STA. TO STA.

F.A.P. RTE.	SECTION	COUNTY	TOTAL SHEETS	SHEET NO.
709	(113)RS-7	CHAMPAIGN	103	12

CONTRACT NO. 70944

ILLINOIS FED. AID PROJECT

REV. 3/20/23

SUMMARY OF QUANTITIES

			LOCATION OF WORK:	FAP 709 (US 136) MINOR ARTERIAL URBAN STA. 2362+00.00 STA. 153+82.71 CHAMPAIGN	FAP 709 (US 136) MINOR ARTERIAL RURAL STA. 153+82.71 STA. 423+00.00 CHAMPAIGN	FAP 709 (US 136) MINOR ARTERIAL RURAL STA. 299+49.50 STA. 299+98.50 CHAMPAIGN	FAP 709 (US 136) MINOR ARTERIAL URBAN STA. 2362+00.00 STA. 101+37.93 CHAMPAIGN	FAP 709 (US 136) MINOR ARTERIAL URBAN STA. 120+03.47 STA. 121+25.08 CHAMPAIGN	FAP 709 (US 136) MINOR ARTERIAL URBAN STA. 2362+00.00 STA. 101+37.93 CHAMPAIGN
			FUNDING BREAKOUT:	80% FED / 20% STATE	80% FED / 20% STATE	80% FED / 20% STATE	80% FED / 10% STATE / 10% VILLAGE	80% FED / 20% VILLAGE	100% VILLAGE
			CONSTRUCTION TYPE CODE:	0005	0005	0059	0021	0021	0021
	CODE NO.		ITEM	UNIT	TOTAL QUANTITY	ROADWAY QUANTITY	ROADWAY QUANTITY	S.N. 010-0257 QUANTITY	MAPLEWOOD DR QUANTITY	LON DR QUANTITY	LUMINAIRES QUANTITY
*	XZ193400		SURVEY MARKER, TYPE 2 (SPECIAL)	EACH	14.00	5.00	9.00				
	Z0010910		COLD MILLING (SPECIAL)	SQ YD	936.00	936.00					
	Z0013798		CONSTRUCTION LAYOUT	L SUM	1.00	0.50	0.50				
*	Z0070202		SURVEY MARKER VAULT	EACH	15.00	2.00	13.00				
Ø	Z0076600		TRAINEES	HOUR	1,000	1,000					
Ø	Z0076604		TRAINEES - TRAINING PROGRAM GRADUATE	HOUR	1,000	1,000					

* DENOTES SPECIALTY ITEM Ø 0042

MODEL: $MODELNAME$
FILE NAME: pw:\\ildot-pw.bentley.com:PWIDOT\Documents\IDOT Offices\District 5\Projects\D570944\CADData\CADsheets\D570944-sht-Summary of Quantities.dgn

USER NAME = Tyler.Pierson	DESIGNED -	REVISED -	STATE OF ILLINOIS DEPARTMENT OF TRANSPORTATION
	DRAWN -	REVISED -	
PLOT SCALE = 40.0000 ' / in.	CHECKED -	REVISED -	
PLOT DATE = 1/26/2023	DATE -	REVISED -	

SUMMARY OF QUANTITIES

SCALE: SHEET 10 OF 10 SHEETS STA. TO STA.

F.A.P. RTE.	SECTION	COUNTY	TOTAL SHEETS	SHEET NO.
709	(113)RS-7	CHAMPAIGN	103	13

CONTRACT NO. 70944

ILLINOIS FED. AID PROJECT

REV. 3/20/23 REV. 3/10/23

SCHEDULES OF QUANTITIES

EASTBOUND EARTHWORK SCHEDULE

STA	TO	STA	LENGTH FT	OMISSION REASON	START CUT AREA SQ FT	START FILL AREA SQ FT	END FILL AREA SQ FT	AVERAGE FILL AREA SQ FT	20200100 EARTH EXCAVATION CU YD	EARTH EXC. ADJ. FOR SHRINKAGE CU YD	TOTAL EMBANKMENT CU YD	EARTHWORK BALANCE WASTE (+) SHORTAGE (-) CU YD
208+78.00	TO	209+00.00	22.00		0.00	0.00	0.00	0.00	3.70	2.78	0.00	2.78
209+00.00	TO	215+85.97	685.97	F.E. #014	9.07	0.00	4.64	2.32	189.28	141.96	58.94	83.02
216+12.32	TO	225+78.44	966.12	F.E. #015	3.90	4.37	0.00	2.19	119.15	89.36	78.36	11.00
226+10.62	TO	226+52.81	42.19	F.E. #016	10.79	0.00	0.00	0.00	16.86	12.65	0.00	12.65
226+84.19	TO	228+11.29	127.10	F.E. #017	15.85	0.00	0.00	0.00	54.46	40.85	0.00	40.85
228+54.63	TO	235+72.33	717.70	P.E. #009	6.60	3.12	0.00	1.56	251.99	188.99	41.47	147.52
236+01.66	TO	236+49.25	47.59	P.E. #011	7.51	0.00	0.00	0.00	13.24	9.93	0.00	9.93
236+75.78	TO	238+83.63	207.85	P.E. #014	5.08	1.34	1.75	1.55	64.05	48.04	11.93	36.11
239+15.70	TO	240+84.97	169.27	P.E. #017	12.65	3.19	4.72	3.96	74.42	55.82	24.83	30.99
241+17.31	TO	242+84.06	166.75	P.E. #020	13.30	3.81	3.23	3.52	86.52	64.89	21.74	43.15
243+16.42	TO	244+44.39	127.97	P.E. #021	14.75	3.42	4.17	3.80	60.67	45.50	18.01	27.49
245+01.71	TO	245+75.87	74.16	P.E. #024	9.76	2.33	1.62	1.98	28.07	21.05	5.44	15.61
246+17.21	TO	247+27.99	110.78	P.E. #025	8.88	2.10	2.37	2.24	31.55	23.66	9.19	14.47
247+59.33	TO	248+52.83	93.50	P.E. #026	2.52	1.42	0.01	0.72	9.66	7.25	2.49	4.76
248+79.84	TO	249+70.32	90.48	P.E. #027	2.81	1.57	2.36	1.97	13.24	9.93	6.60	3.33
250+00.32	TO	250+60.92	60.60	P.E. #028	8.95	1.89	3.17	2.53	16.20	12.15	5.68	6.47
250+83.93	TO	251+15.26	31.33	P.E. #029	3.65	2.19	2.19	2.19	4.24	3.18	2.54	0.64
251+48.26	TO	251+73.91	25.65	P.E. #030	10.43	3.30	3.30	3.30	9.91	7.43	3.14	4.29
252+38.40	TO	252+90.04	51.64		20.98	0.00	0.00	0.00	20.06	15.05	0.00	15.05
								EASTBOUND TOTALS =	1,067.27	800.47	290.36	510.11
								EASTBOUND ROUNDED TOTALS =	1,070.00	805.00	295.00	515.00

WESTBOUND EARTHWORK SCHEDULE

STA	TO	STA	LENGTH FT	OMISSION REASON	START CUT AREA SQ FT	START FILL AREA SQ FT	END FILL AREA SQ FT	AVERAGE FILL AREA SQ FT	20200100 EARTH EXCAVATION CU YD	EARTH EXC. ADJ. FOR SHRINKAGE CU YD	TOTAL EMBANKMENT CU YD	EARTHWORK BALANCE WASTE (+) SHORTAGE (-) CU YD
208+17.00	TO	208+50.00	33.00		0.00	0.00	0.00	0.00	6.28	4.71	0.00	4.71
208+50.00	TO	211+33.43	283.43	P.E. #004	10.28	0.00	0.07	0.04	90.38	67.79	0.42	67.37
211+79.66	TO	212+90.50	110.84	C.E. #031	4.11	0.17	3.94	2.06	13.47	10.10	8.46	1.64
214+32.67	TO	220+42.71	610.04	C.E. #032	9.88	3.63	0.00	1.82	244.92	183.69	41.12	142.57
221+07.03	TO	221+35.92	28.89	C.E. #033	17.29	0.00	0.00	0.00	18.50	13.88	0.00	13.88
221+97.24	TO	224+23.02	225.78	C.E. #034	15.89	0.00	0.00	0.00	133.29	99.97	0.00	99.97
224+89.35	TO	225+46.28	56.93	C.E. #035	15.98	0.00	0.00	0.00	35.28	26.46	0.00	26.46
225+97.61	TO	226+22.76	25.15	C.E. #036	14.99	0.00	0.00	0.00	13.96	10.47	0.00	10.47
226+95.12	TO	228+25.14	130.02	C.E. #037	5.16	0.00	0.00	0.00	19.74	14.81	0.00	14.81
228+80.30	TO	230+36.65	156.35	C.E. #038	0.95	0.00	0.00	0.00	7.64	5.73	0.00	5.73
230+81.98	TO	231+52.80	70.82	P.E. #005	3.68	0.00	0.00	0.00	11.44	8.58	0.00	8.58
231+84.45	TO	232+91.36	106.91	P.E. #006	9.66	0.00	0.00	0.00	35.12	26.34	0.00	26.34
233+27.72	TO	234+44.40	116.68	P.E. #007	6.96	0.00	0.00	0.00	28.39	21.29	0.00	21.29
234+73.74	TO	235+05.70	31.96	P.E. #008	9.68	0.00	0.00	0.00	11.46	8.60	0.00	8.60
235+33.00	TO	236+13.55	80.55	P.E. #010	16.02	0.00	15.63	7.82	47.23	35.42	23.33	12.09
236+39.88	TO	236+79.40	39.52	P.E. #012	7.46	0.00	0.00	0.00	10.92	8.19	0.00	8.19
237+11.62	TO	237+94.51	82.89	P.E. #013	11.02	0.00	0.00	0.00	32.91	24.68	0.00	24.68
238+25.84	TO	238+97.24	71.40	P.E. #015	15.18	0.05	0.45	0.25	38.74	29.06	0.66	28.40
239+32.58	TO	240+02.60	70.02	P.E. #016	20.78	0.00	0.00	0.00	50.05	37.54	0.00	37.54
240+38.86	TO	241+16.75	77.89	P.E. #018	14.93	0.00	0.00	0.00	50.60	37.95	0.00	37.95
241+53.11	TO	242+45.93	92.82	P.E. #019	17.27	0.00	0.00	0.00	59.51	44.63	0.00	44.63
242+84.27	TO	244+51.08	166.81	P.E. #022	14.48	0.00	0.00	0.00	75.81	56.86	0.00	56.86
244+89.64	TO	247+39.48	249.84	F.E. #018	9.12	0.00	0.00	0.00	80.23	60.17	0.00	60.17
247+75.82	TO	250+00.00	224.18		0.86	4.73	0.00	2.37	3.57	2.68	19.68	-17.00
								WESTBOUND TOTALS =	1,119.44	839.60	93.67	745.93
								WESTBOUND ROUNDED TOTALS =	1,120.00	840.00	95.00	750.00
								TOTALS =	2,190.00	1,645.00	390.00	1,265.00

SCHEDULES OF QUANTITIES

EASTBOUND SEEDING SCHEDULE

STA	TO	STA	LENGTH FT	OMISSION REASON	START SEEDING LENGTH FT	END SEEDING LENGTH FT	*AVERAGE CUT AREA SQ FT	25000210 RURAL SEEDING CLASS 2A ACRE	25000400 RURAL NITROGEN FERTILIZER NUTRIENT POUND	25000500 RURAL PHOSPHORUS FERTILIZER NUTRIENT POUND	25000600 RURAL POTASSIUM FERTILIZER NUTRIENT POUND	25100115 RURAL MULCH METHOD 2 ACRE	28000250 RURAL TEMP EROSION CONTROL SEEDING POUND
208+78.00	TO	215+85.97	707.97	F.E. #014	20.83	21.88	23.36	0.380	34.20	34.20	34.20	0.380	152.00
216+12.32	TO	225+78.44	966.12	F.E. #015	21.52	18.71	22.12	0.491	44.19	44.19	44.19	0.491	196.40
226+10.62	TO	226+52.81	42.19	F.E. #016	20.73	20.73	22.73	0.022	1.98	1.98	1.98	0.022	8.80
226+84.19	TO	228+11.29	127.10	F.E. #017	20.75	16.80	20.78	0.061	5.49	5.49	5.49	0.061	24.40
228+54.63	TO	235+72.33	717.70	P.E. #009	17.47	16.85	19.16	0.316	28.44	28.44	28.44	0.316	126.40
236+01.66	TO	236+49.25	47.59	P.E. #011	13.01	13.01	15.01	0.016	1.44	1.44	1.44	0.016	6.40
236+75.78	TO	238+83.63	207.85	P.E. #014	15.98	20.71	20.35	0.097	8.73	8.73	8.73	0.097	38.80
239+15.70	TO	240+84.97	169.27	P.E. #017	21.13	20.58	22.86	0.089	8.01	8.01	8.01	0.089	35.60
241+17.31	TO	242+84.06	166.75	P.E. #020	21.06	21.01	23.04	0.088	7.92	7.92	7.92	0.088	35.20
243+16.42	TO	244+44.39	127.97	P.E. #021	21.05	19.36	22.21	0.065	5.85	5.85	5.85	0.065	26.00
245+01.71	TO	245+75.87	74.16	P.E. #024	18.36	18.63	20.50	0.035	3.15	3.15	3.15	0.035	14.00
246+17.21	TO	247+27.99	110.78	P.E. #025	18.19	17.84	20.02	0.051	4.59	4.59	4.59	0.051	20.40
247+59.33	TO	248+52.83	93.50	P.E. #026	15.04	14.03	16.54	0.036	3.24	3.24	3.24	0.036	14.40
248+79.84	TO	249+70.32	90.48	P.E. #027	15.79	16.70	18.25	0.038	3.42	3.42	3.42	0.038	15.20
250+00.32	TO	250+60.92	60.60	P.E. #028	18.44	17.26	19.85	0.028	2.52	2.52	2.52	0.028	11.20
250+83.93	TO	251+15.26	31.33	P.E. #029	15.93	15.93	17.93	0.013	1.17	1.17	1.17	0.013	5.20
251+48.26	TO	251+73.91	25.65	P.E. #030	20.56	20.56	22.56	0.013	1.17	1.17	1.17	0.013	5.20
252+38.40	TO	252+90.04	51.64		20.01	0.00	12.01	0.014	1.26	1.26	1.26	0.014	5.60
							EASTBOUND TOTALS =	1.85	166.77	166.77	166.77	1.85	741.20
							EASTBOUND ROUNDED TOTALS =	2.00	180.00	180.00	180.00	2.00	800.00

* 2' OUTSIDE BACKSLOPE TIE IN SHALL BE SEEDED

WESTBOUND SEEDING SCHEDULE

STA	TO	STA	LENGTH FT	OMISSION REASON	START SEEDING LENGTH FT	END SEEDING LENGTH FT	*AVERAGE CUT AREA SQ FT	25000210 RURAL SEEDING CLASS 2A ACRE	25000400 RURAL NITROGEN FERTILIZER NUTRIENT POUND	25000500 RURAL PHOSPHORUS FERTILIZER NUTRIENT POUND	25000600 RURAL POTASSIUM FERTILIZER NUTRIENT POUND	25100115 RURAL MULCH METHOD 2 ACRE	28000250 RURAL TEMP EROSION CONTROL SEEDING POUND
208+17.00	TO	211+33.43	316.43	P.E. #004	22.54	22.76	24.65	0.179	16.11	16.11	16.11	0.179	71.60
211+79.66	TO	212+90.50	110.84	C.E. #031	20.04	21.72	22.88	0.058	5.22	5.22	5.22	0.058	23.20
214+32.67	TO	220+42.71	610.04	C.E. #032	23.03	21.61	24.32	0.341	30.69	30.69	30.69	0.341	136.40
221+07.03	TO	221+35.92	28.89	C.E. #033	22.44	22.44	24.44	0.016	1.44	1.44	1.44	0.016	6.40
221+97.24	TO	224+23.02	225.78	C.E. #034	21.68	21.44	23.56	0.122	10.98	10.98	10.98	0.122	48.80
224+89.35	TO	225+46.28	56.93	C.E. #035	20.72	20.72	22.72	0.030	2.70	2.70	2.70	0.030	12.00
225+97.61	TO	226+22.76	25.15	C.E. #036	18.83	18.83	20.83	0.012	1.08	1.08	1.08	0.012	4.80
226+95.12	TO	228+25.14	130.02	C.E. #037	13.24	10.99	14.12	0.042	3.78	3.78	3.78	0.042	16.80
228+80.30	TO	230+36.65	156.35	C.E. #038	9.07	9.47	11.27	0.040	3.60	3.60	3.60	0.040	16.00
230+81.98	TO	231+52.80	70.82	P.E. #005	16.56	17.00	18.78	0.031	2.79	2.79	2.79	0.031	12.40
231+84.45	TO	232+91.36	106.91	P.E. #006	18.05	16.90	19.48	0.048	4.32	4.32	4.32	0.048	19.20
233+27.72	TO	234+44.40	116.68	P.E. #007	16.97	17.23	19.10	0.051	4.59	4.59	4.59	0.051	20.40
234+73.74	TO	235+05.70	31.96	P.E. #008	16.45	16.45	18.45	0.014	1.26	1.26	1.26	0.014	5.60
235+33.00	TO	236+13.55	80.55	P.E. #010	17.71	17.23	19.47	0.036	3.24	3.24	3.24	0.036	14.40
236+39.88	TO	236+79.40	39.52	P.E. #012	11.95	19.95	17.95	0.016	1.44	1.44	1.44	0.016	6.40
237+11.62	TO	237+94.51	82.89	P.E. #013	19.03	17.95	20.49	0.039	3.51	3.51	3.51	0.039	15.60
238+25.84	TO	238+97.24	71.40	P.E. #015	22.11	21.16	23.64	0.039	3.51	3.51	3.51	0.039	15.60
239+32.58	TO	240+02.60	70.02	P.E. #016	20.35	19.69	22.02	0.035	3.15	3.15	3.15	0.035	14.00
240+38.86	TO	241+16.75	77.89	P.E. #018	19.06	20.31	21.69	0.039	3.51	3.51	3.51	0.039	15.60
241+53.11	TO	242+45.93	92.82	P.E. #019	20.50	20.01	22.26	0.047	4.23	4.23	4.23	0.047	18.80
242+84.27	TO	244+51.08	166.81	P.E. #022	19.46	16.42	19.94	0.076	6.84	6.84	6.84	0.076	30.40
244+89.64	TO	247+39.48	249.84	F.E. #018	21.20	21.09	23.15	0.133	11.97	11.97	11.97	0.133	53.20
247+75.82	TO	250+00.00	224.18		14.27	0.00	9.14	0.047	4.23	4.23	4.23	0.047	18.80
							WESTBOUND TOTALS =	1.491	134.19	134.19	134.19	1.491	596.40
							WESTBOUND ROUNDED TOTALS =	1.50	135.00	135.00	135.00	1.50	600.00
							TOTALS =	3.50	315.00	315.00	315.00	3.50	1,400.00

* 2' OUTSIDE BACKSLOPE TIE IN SHALL BE SEEDED

INLET & PIPE PROTECTION SCHEDULE

STA	DIRECTION	LOCATION	28000500 RURAL INLET AND PIPE PROTECTION EACH
208+15.86	WB	F.E. #013	1.00
208+70.88	EB	CR 1900 E	1.00
212+62.06	BOTH	S.N. 010-8169	2.00
241+89.86	BOTH	AR CULVERT	2.00
215+99.51	EB	F.E. #014	2.00
225+92.16	EB	F.E. #015	2.00
226+68.05	EB	F.E. #016	2.00
228+37.70	EB	F.E. #017	2.00
235+86.97	EB	P.E. #009	2.00
236+63.94	EB	P.E. #011	2.00
239+01.59	EB	P.E. #014	2.00
241+01.81	EB	P.E. #017	2.00
243+00.15	EB	P.E. #020	2.00
244+60.25	EB	P.E. #021 & P.E. #023	2.00
245+98.98	EB	P.E. #024	2.00
247+43.09	EB	P.E. #025	2.00
248+64.85	EB	P.E. #026	2.00
249+85.74	EB	P.E. #027	2.00
250+73.04	EB	P.E. #028	2.00
251+27.80	EB	P.E. #029	2.00
251+90.06	EB	P.E. #030	2.00
211+58.08	WB	P.E. #004	2.00
213+61.87	WB	C.E. #031	2.00
220+74.10	WB	C.E. #032	2.00
221+69.51	WB	C.E. #033	2.00
224+53.94	WB	C.E. #034	2.00
225+71.44	WB	C.E. #035	2.00
226+58.39	WB	C.E. #036	2.00
228+58.94	WB	C.E. #037	2.00
230+59.12	WB	C.E. #038	2.00
231+67.73	WB	P.E. #005	2.00
233+12.12	WB	P.E. #006	2.00
234+59.00	WB	P.E. #007	2.00
235+20.78	WB	P.E. #008	2.00
236+29.32	WB	P.E. #010	2.00
236+95.09	WB	P.E. #012	2.00
238+10.09	WB	P.E. #013	2.00
239+15.64	WB	P.E. #015	2.00
240+20.59	WB	P.E. #016	2.00
241+33.82	WB	P.E. #018	2.00
242+65.45	WB	P.E. #019	2.00
244+71.77	WB	P.E. #022	2.00
247+57.35	WB	F.E. #018	2.00
		TOTALS =	84.00

SCHEDULES OF QUANTITIES

EASTBOUND TEMPORARY DITCH CHECK SCHEDULE

STA	TO	STA	LENGTH FT	REASON FOR GAP	NUMBER OF DITCH CHECKS	28000305 RURAL TEMPORARY DITCH CHECK FT
208+78.00	TO	215+85.97	707.97	F.E. #014	7.00	70.00
216+12.32	TO	225+78.44	966.12	F.E. #015	9.00	90.00
226+10.62	TO	226+52.81	42.19	F.E. #016	1.00	10.00
226+84.19	TO	228+11.29	127.10	F.E. #017	1.00	10.00
228+54.63	TO	235+72.33	717.70	P.E. #009	7.00	70.00
236+01.66	TO	236+49.25	47.59	P.E. #011	1.00	10.00
236+75.78	TO	238+83.63	207.85	P.E. #014	2.00	20.00
239+15.70	TO	240+84.97	169.27	P.E. #017	1.00	10.00
241+17.31	TO	242+84.06	166.75	P.E. #020	1.00	10.00
243+16.42	TO	244+44.39	127.97	P.E. #021	1.00	10.00
245+01.71	TO	245+75.87	74.16	P.E. #024	1.00	10.00
246+17.21	TO	247+27.99	110.78	P.E. #025	1.00	10.00
247+59.33	TO	248+52.83	93.50	P.E. #026	1.00	10.00
248+79.84	TO	249+70.32	90.48	P.E. #027	1.00	10.00
250+00.32	TO	250+60.92	60.60	P.E. #028	1.00	10.00
250+83.93	TO	251+15.26	31.33	P.E. #029	1.00	10.00
251+48.26	TO	251+73.91	25.65	P.E. #030	1.00	10.00
252+38.40	TO	253+20.00	81.60		1.00	10.00
					EASTBOUND TOTAL =	390.00

WESTBOUND TEMPORARY DITCH CHECK SCHEDULE

STA	TO	STA	LENGTH FT	REASON FOR GAP	NUMBER OF DITCH CHECKS	28000305 RURAL TEMPORARY DITCH CHECK FT
208+17.00	TO	211+33.43	316.43	P.E. #004	3.00	30.00
211+79.66	TO	212+90.50	110.84	C.E. #031	1.00	11.00
214+32.67	TO	220+42.71	610.04	C.E. #032	6.00	72.00
221+07.03	TO	221+35.92	28.89	C.E. #033	1.00	13.00
221+97.24	TO	224+23.02	225.78	C.E. #034	2.00	28.00
224+89.35	TO	225+46.28	56.93	C.E. #035	1.00	15.00
225+97.61	TO	226+22.76	25.15	C.E. #036	1.00	16.00
226+95.12	TO	228+25.14	130.02	C.E. #037	1.00	17.00
228+80.30	TO	230+36.65	156.35	C.E. #038	1.00	18.00
230+81.98	TO	231+52.80	70.82	P.E. #005	1.00	19.00
231+84.45	TO	232+91.36	106.91	P.E. #006	1.00	20.00
233+27.72	TO	234+44.40	116.68	P.E. #007	1.00	21.00
234+73.74	TO	235+05.70	31.96	P.E. #008	1.00	22.00
235+33.00	TO	236+13.55	80.55	P.E. #010	1.00	23.00
236+39.88	TO	236+79.40	39.52	P.E. #012	1.00	24.00
237+11.62	TO	237+94.51	82.89	P.E. #013	1.00	25.00
238+25.84	TO	238+97.24	71.40	P.E. #015	1.00	26.00
239+32.58	TO	240+02.60	70.02	P.E. #016	1.00	27.00
240+38.86	TO	241+16.75	77.89	P.E. #018	1.00	28.00
241+53.11	TO	242+45.93	92.82	P.E. #019	1.00	29.00
242+84.27	TO	244+51.08	166.81	P.E. #022	1.00	30.00
244+89.64	TO	247+39.48	249.84	F.E. #018	2.00	62.00
247+75.82	TO	252+45.00	469.18		4.00	128.00
					WESTBOUND TOTAL =	704.00
					TOTAL =	1,094.00

EASTBOUND DITCH WORK INCIDENTAL ENTRANCE SCHEDULE

STA	LOCATION	MATERIAL	EXISTING PIPE SIZE IN	PROPOSED PIPE SIZE IN	PROPOSED PIPE SPAN IN	AGGREGATE THICKNESS IN	HMA THICKNESS IN	REMOVAL & REPLACEMENT AREA SQ FT	40200800 RURAL AGGREGATE SURFACE COURSE, TYPE B TON	40800029 RURAL BITUMINOUS MATERIALS (TACK COAT) POUND	40800050 RURAL INCIDENTAL HMA SURFACING TON	42300200 RURAL PCC DRIVEWAY PAVEMENT, 6 INCH SQ YD	44000200 RURAL DRIVEWAY PAVEMENT REMOVAL SQ YD	60603800 RURAL COMBINATION CONCRETE C&G TYPE B-6.12 FOOT
235+86.97	P.E. #009	AGGREGATE	15.00	15	15	6.00		56.84	1.89					
236+63.94	P.E. #011	AGGREGATE	24.00	24	28	6.00		92.74	3.09					
239+01.59	P.E. #014	AGGREGATE	24.00	24	24	6.00		148.34	4.94					
241+01.81	P.E. #017	AGGREGATE	12.00	15	15	6.00		154.97	5.17					
243+00.15	P.E. #020	HMA	12.00	15	15		4.00	227.21		11.36	5.66		25.25	
244+60.25	P.E. #021	AGGREGATE	15.00	15	15	6.00		142.26	4.74					
244+86.06	P.E. #023	AGGREGATE	15.00	15	15	6.00		157.14	5.24					
245+98.98	P.E. #024	PCC	12.00	15	15			189.76				21.08	21.08	
247+43.09	P.E. #025	AGGREGATE	12.00	15	15	6.00		106.74	3.56					
248+64.85	P.E. #026	AGGREGATE	12.00	15	17	6.00		84.08	2.80					
249+85.74	P.E. #027	AGGREGATE	12.00	15	17	6.00		131.11	4.37					
250+73.04	P.E. #028	AGGREGATE	15.00	15	17	6.00		75.44	2.51					
251+27.80	P.E. #029	AGGREGATE	15.00	15	17	6.00		121.86	4.06					
251+90.06	P.E. #030	HMA	18.00	18	18		4.00	169.99		8.50	4.23		18.89	
								EASTBOUND TOTALS =	42.37	19.86	9.89	21.08	65.22	0.00
								EASTBOUND ROUNDED TOTALS =	43.00	20.00	10.00	22.00	66.00	0.00

40800029 AND 40800050 QUANTITIES CONTINUE IN INCIDENTAL HMA RESURFACING SCHEDULE

WESTBOUND DITCH WORK INCIDENTAL ENTRANCE SCHEDULE

STA	LOCATION	ENTRANCE MATERIAL	EXISTING PIPE SIZE IN	PROPOSED PIPE SIZE IN	PROPOSED PIPE SPAN IN	AGGREGATE THICKNESS IN	HMA THICKNESS IN	REMOVAL & REPLACEMENT AREA SQ FT	40200800 RURAL AGGREGATE SURFACE COURSE, TYPE B TON	40800029 RURAL BITUMINOUS MATERIALS (TACK COAT) POUND	40800050 RURAL INCIDENTAL HMA SURFACING TON	42300200 RURAL PCC DRIVEWAY PAVEMENT, 6 INCH SQ YD	44000200 RURAL DRIVEWAY PAVEMENT REMOVAL SQ YD	60603800 RURAL COMBINATION CONCRETE C&G TYPE B 6.12 FOOT
211+58.08	P.E. #004	AGGREGATE	24.00	24	24	6.00		55.72	1.86					
213+61.87	C.E. #031	HMA	24.00	24	24		4.00	383.66		19.18	9.55		42.63	20.00
220+74.10	C.E. #032	PCC	15.00	15	15			167.27				18.59	18.59	
221+69.51	C.E. #033	HMA	15.00	15	15		4.00	159.65		7.98	3.97		17.74	
224+53.94	C.E. #034	AGGREGATE	18.00	18	18	6.00		172.06	5.74					
225+71.44	C.E. #035	AGGREGATE	8.00	15	15	6.00		104.58	3.49					
226+58.39	C.E. #036	PCC	15.00	15	15			141.13				15.68	15.68	
228+58.94	C.E. #037	HMA	24.00	24	24		4.00	150.79		7.54	3.75		16.75	
230+59.12	C.E. #038	PCC	18.00	18	21			118.36				13.15	13.15	
231+67.73	P.E. #005	AGGREGATE	24.00	24	28	6.00		89.80	2.99					
233+12.12	P.E. #006	AGGREGATE	15.00	15	15	6.00		98.87	3.30					
234+59.00	P.E. #007	PCC	18.00	18	18			53.84				5.98	5.98	
235+20.78	P.E. #008	AGGREGATE	12.00	15	15	6.00		52.64	1.75					
236+95.09	P.E. #012	AGGREGATE	15.00	15	15	6.00		69.52	2.32					
238+10.09	P.E. #013	PCC	18.00	18	18			108.41				12.05	12.05	
239+15.64	P.E. #015	PCC	12.00	15	15			132.79				14.75	14.75	
240+20.59	P.E. #016	PCC	12.00	15	15			109.47				12.16	12.16	
241+33.82	P.E. #018	PCC	12.00	15	15			109.32				12.15	12.15	
242+65.45	P.E. #019	PCC	12.00	15	15			113.44				12.60	12.60	
244+71.77	P.E. #022	HMA	15.00	15	15		4.00	92.54		4.63	2.30		10.28	
247+57.35	F.E. #018	AGGREGATE	18.00	18	18	6.00		58.88	1.96					
								WESTBOUND TOTALS =	23.41	39.33	19.57	117.11	204.51	20.00
								WESTBOUND ROUNDED TOTALS =	24.00	40.00	20.00	118.00	205.00	20.00
								TOTALS =	67.00	60.00	30.00	140.00	271.00	20.00

40800029 AND 40800050 QUANTITIES CONTINUE IN INCIDENTAL HMA RESURFACING SCHEDULE

SCHEDULES OF QUANTITIES

EASTBOUND PAVING SCHEDULE

STA	TO	STA	LENGTH FT	URBAN RURAL	AVERAGE WIDTH FT	LANE AREA SQ YD	SURFACE THICKNESS IN	AVERAGE BINDER THICKNESS IN	HMA IN OUTSIDE C&G WIDTH FT	LANE HMA SURFACE TON	C&G HMA SURFACE TON	40600290 BITUMINOUS MATERIAL (TACK COAT) POUND			40602965 HMA BINDER COURSE IL-9.5FG,N50 TON			40604050 HMA SURFACE COURSE, IL-9.5 MIX "C", N50 TON			44000160 HMA SURFACE REMOVAL 2 3/4" SQ YD		
												URBAN	RURAL	STRUCTURE	URBAN	RURAL	STRUCTURE	URBAN	RURAL	STRUCTURE	URBAN	RURAL	STRUCTURE
2362+00.00	TO	2362+39.04	39.04	URBAN	37.41	162.28	1.50	1.25		13.63		109.54			11.36			13.63			162.28		
STA. EQN. 2362+39.04 (BK) = 100+00.00 (AH)																							
100+00.00	TO	101+21.69	121.69	URBAN	38.28	517.52	1.50	1.25		43.47		349.32			36.23			43.47			517.52		
101+21.69	TO	102+50.00	128.31	URBAN	38.55	549.59	1.50	1.25	2.00	46.17	3.19	383.81			38.47			49.36			549.59		
102+50.00	TO	105+00.00	250.00	URBAN	36.01	1,000.14	1.50	1.25	2.00	84.01	6.22	700.09			70.01			90.23			1,000.14		
105+00.00	TO	107+50.00	250.00	URBAN	32.10	891.53	1.50	1.25	1.00	74.89	3.11	614.28			62.41			78.00			891.53		
107+50.00	TO	109+96.46	246.46	URBAN	30.67	839.88	1.50	1.25	1.00	70.55	3.07	579.24			58.79			73.62			839.88		
STA. EQN. 109+96.46 (BK) = 110+00.00 (AH)																							
110+00.00	TO	112+50.00	250.00	URBAN	30.78	854.86	1.50	1.25	1.00	71.81	3.11	589.53			59.84			74.92			854.86		
112+50.00	TO	115+00.00	250.00	URBAN	31.02	861.53	1.50	1.25	1.00	72.37	3.11	594.03			60.31			75.48			861.53		
115+00.00	TO	117+50.00	250.00	URBAN	31.12	864.44	1.50	1.25	1.00	72.61	3.11	596.00			60.51			75.72			864.44		
117+50.00	TO	120+00.00	250.00	URBAN	30.82	855.97	1.50	1.25	1.00	71.90	3.11	590.28			59.92			75.01			855.97		
120+00.00	TO	121+25.00	125.00	URBAN	30.87	428.75	1.50	1.25		36.02		289.41			30.01			36.02			428.75		
121+25.00	TO	122+50.00	125.00	URBAN	31.08	431.67	1.50	1.25	1.00	36.26	1.56	297.63			30.22			37.82			431.67		
122+50.00	TO	125+00.00	250.00	URBAN	30.71	853.06	1.50	1.25	1.00	71.66	3.11	588.32			59.71			74.77			853.06		
125+00.00	TO	127+50.00	250.00	URBAN	30.75	854.03	1.50	1.25	1.00	71.74	3.11	588.97			59.78			74.85			854.03		
127+50.00	TO	130+00.00	250.00	URBAN	30.31	841.81	1.50	1.25	1.00	70.71	3.11	580.72			58.93			73.82			841.81		
130+00.00	TO	131+95.00	195.00	URBAN	27.59	597.68	1.50	1.25	2.00	50.21	4.85	422.94			41.84			55.06			597.68		
131+95.00	TO	132+82.81	87.81	URBAN	25.93	252.94	1.50	1.25		21.25		170.73			17.71			21.25			252.94		
132+50.00	TO	134+37.90	187.90	URBAN	24.92	520.17	1.50	1.25	2.00	43.69	4.68	369.91			36.41			48.37			520.17		
STA. EQN. 134+37.90 (BK) = 134+40.40 (AH)																							
134+40.40	TO	135+00.00	59.60	URBAN	23.66	156.68	1.50	1.25	2.00	13.16	1.48	111.72			10.97			14.64			156.68		
135+00.00	TO	137+50.00	250.00	URBAN	24.98	693.89	1.50	1.25	2.00	58.29	6.22	493.38			48.57			64.51			693.89		
137+50.00	TO	139+80.00	230.00	URBAN	22.50	574.87	1.50	1.25	2.00	48.29	5.72	411.04			40.24			54.01			574.87		
139+80.00	TO	139+97.40	17.40	URBAN	18.29	35.35	1.50	1.25		2.97		23.86			2.47			2.97			35.35		
STA. EQN. 139+97.40 (BK) = 140+00.00 (AH)																							
140+00.00	TO	141+41.01	141.01	URBAN	15.44	241.83	1.50	1.25		20.31		163.23			16.93			20.31			241.83		
141+41.01	TO	150+00.00	858.99	URBAN	12.85	1,225.97	1.50	1.25		102.98		827.53			85.82			102.98			1,225.97		
150+00.00	TO	153+82.71	382.71	URBAN	12.50	531.54	1.50	1.25		44.65		358.79			37.21			44.65			531.54		
153+82.71	TO	160+00.00	617.29	RURAL	12.63	865.92	1.50	1.25		72.74			584.49			60.61			72.74			865.92	
160+00.00	TO	170+00.00	1,000.00	RURAL	12.89	1,431.67	1.50	1.25		120.26			966.38			100.22			120.26			1,431.67	
170+00.00	TO	173+55.76	355.76	RURAL	13.26	523.96	1.50	1.25		44.01			353.67			36.68			44.01			523.96	
OMISSION - S.N. 010-0252 E-E APPR.																							
174+75.52	TO	180+00.00	524.48	RURAL	13.61	792.84	1.50	1.25		66.60			535.17			55.50			66.60			792.84	
180+00.00	TO	190+00.00	1,000.00	RURAL	13.35	1,483.33	1.50	1.25		124.60			1,001.25			103.83			124.60			1,483.33	
STA. EQN. 190+00.00 (BK) = 189+95.90 (AH)																							
189+95.90	TO	200+00.00	1,004.10	RURAL	13.36	1,490.53							1,006.11									1,490.53	
200+00.00	TO	210+00.00	1,000.00	RURAL	13.40	1,488.33	1.50	1.25		125.02			1,004.62			104.18			125.02			1,488.33	
210+00.00	TO	220+00.00	1,000.00	RURAL	13.20	1,466.67	1.50	1.25		123.20			990.00			102.67			123.20			1,466.67	
220+00.00	TO	230+00.00	1,000.00	RURAL	13.10	1,455.00	1.50	1.25		122.22			982.13			101.85			122.22			1,455.00	
230+00.00	TO	240+00.00	1,000.00	RURAL	13.07	1,451.67	1.50	1.25		121.94			979.88			101.62			121.94			1,451.67	
240+00.00	TO	250+00.00	1,000.00	RURAL	13.02	1,446.67	1.50	1.25		121.52			976.50			101.27			121.52			1,446.67	
250+00.00	TO	252+73.82	273.82	RURAL	12.88	391.71	1.50	1.25		32.90			264.40			27.42			32.90			391.71	
OMISSION - S.N. 010-2019 E-E APPR.																							
253+59.71	TO	260+00.00	640.29	RURAL	13.08	930.20	1.50	1.25		78.14			627.89			65.11			78.14			930.20	
260+00.00	TO	270+00.00	1,000.00	RURAL	13.39	1,487.22	1.50	1.25		124.93			1,003.87			104.11			124.93			1,487.22	
EASTBOUND SUB-TOTALS =												10,804.30	11,276.36		1,094.67	1,065.07		1,375.47	1,278.08		15,637.98	16,705.72	

SCHEDULES OF QUANTITIES

EASTBOUND PAVING SCHEDULE (CONTINUED)

STA	TO	STA	LENGTH FT	URBAN RURAL	AVERAGE WIDTH FT	LANE AREA SQ YD	SURFACE THICKNESS IN	AVERAGE BINDER THICKNESS IN	HMA IN OUTSIDE C&G WIDTH FT	LANE HMA SURFACE TON	C&G HMA SURFACE TON	40600290 BITUMINOUS MATERIAL (TACK COAT) POUND			40602965 HMA BINDER COURSE IL-9.5FG,N50 TON			40604050 HMA SURFACE COURSE, IL-9.5 MIX "C", N50 TON			44C00160 HMA SURFACE REMOVAL 2 3/4" SQ YD		
												URBAN	RURAL	STRUCTURE	URBAN	RURAL	STRUCTURE	URBAN	RURAL	STRUCTURE	URBAN	RURAL	STRUCTURE
270+00.00	TO	280+00.00	1,000.00	RURAL	13.28	1,475.00	1.50	1.25		123.90			995.63			103.25			123.90			1,475.00	
280+00.00	TO	288+00.00	800.00	RURAL	13.22	1,174.67	1.50	1.25		98.67			792.90			82.23			98.67			1,174.67	
STA. EQN. 288+00.00 (BK) = 288+11.50 (AH)																							
288+11.50	TO	299+49.50	1,138.00	RURAL	12.98	1,641.25	1.50	1.25		137.87			1,107.84			114.89			137.87			1,641.25	
299+49.50	TO	299+98.50	49.00	STRUCTURE	12.76	69.47	1.50	1.25		5.84				46.89			4.86			5.84			69.47
299+98.50	TO	310+11.20	1,012.70	RURAL	12.99	1,461.10	1.50	1.25		122.73			986.25			102.28			122.73			1,461.10	
STA. EQN. 310+11.20 (BK) = 310+00.00 (AH)																							
310+00.00	TO	320+00.00	1,000.00	RURAL	13.27	1,474.44	1.50	1.25		123.85			995.25			103.21			123.85			1,474.44	
320+00.00	TO	330+00.00	1,000.00	RURAL	13.08	1,452.78	1.50	1.25		122.03			980.63			101.69			122.03			1,452.78	
330+00.00	TO	340+00.00	1,000.00	RURAL	12.97	1,441.11	1.50	1.25		121.05			972.75			100.88			121.05			1,441.11	
340+00.00	TO	350+00.00	1,000.00	RURAL	13.21	1,467.78	1.50	1.25		123.29			990.75			102.74			123.29			1,467.78	
350+00.00	TO	360+00.00	1,000.00	RURAL	13.49	1,498.89	1.50	1.25		125.91			1,011.75			104.92			125.91			1,498.89	
360+00.00	TO	370+00.00	1,000.00	RURAL	13.27	1,473.89	1.50	1.25		123.81			994.88			103.17			123.81			1,473.89	
370+00.00	TO	380+00.00	1,000.00	RURAL	13.08	1,452.78	1.50	1.25		122.03			980.63			101.69			122.03			1,452.78	
380+00.00	TO	390+00.00	1,000.00	RURAL	13.23	1,469.44	1.50	1.25		123.43			991.87			102.86			123.43			1,469.44	
390+00.00	TO	400+00.00	1,000.00	RURAL	13.02	1,446.11	1.50	1.25		121.47			976.12			101.23			121.47			1,446.11	
400+00.00	TO	410+00.00	1,000.00	RURAL	12.92	1,435.00	1.50	1.25		120.54			968.63			100.45			120.54			1,435.00	
410+00.00	TO	420+00.00	1,000.00	RURAL	13.11	1,456.11	1.50	1.25		122.31			982.87			101.93			122.31			1,456.11	
420+00.00	TO	423+00.00	300.00	RURAL	13.51	450.17	1.50	1.25		37.81			303.87			31.51			37.81			450.17	
EASTBOUND URBAN / RURAL TOTALS =												10,804.30	26,308.98	46.89	1,094.67	2,624.00	4.86	1,375.47	3,148.78	5.84	15,637.98	38,976.24	69.47
EASTBOUND URBAN / RURAL ROUNDED TOTALS =												10,805.00	26,309.00	47.00	1,095.00	2,624.00	5.00	1,376.00	3,149.00	6.00	15,638.00	38,977.00	70.00
EASTBOUND TOTALS =												37,161.00			3,724.00			4,531.00			54,685.00		

WESTBOUND PAVING SCHEDULE

STA	TO	STA	LENGTH FT	URBAN RURAL	*AVERAGE WIDTH FT	LANE AREA SQ YD	SURFACE THICKNESS IN	AVERAGE BINDER THICKNESS IN	HMA IN OUTSIDE C&G WIDTH FT	LANE HMA SURFACE TON	C&G HMA SURFACE TON	40600290 BITUMINOUS MATERIAL (TACK COAT) POUND			40602965 HMA BINDER COURSE IL-9.5FG.N50 TON			40604050 HMA SURFACE COURSE, IL-9.5 MIX "C". N50 TON			44C00160 HMA SURFACE REMOVAL 2 3/4" SQ YD		
												URBAN	RURAL	STRUCTURE	URBAN	RURAL	STRUCTURE	URBAN	RURAL	STRUCTURE	URBAN	RURAL	STRUCTURE
2362+00.00	TO	2362+39.04	39.04	URBAN	27.55	119.48	1.50	1.25		10.04		80.65			8.36			10.04			119.48		
STA. EQN. 2362+39.04 (BK) = 100+00.00 (AH)																							
100+00.00	TO	101+38.40	138.40	URBAN	25.83	397.13	1.50	1.25		33.36		268.06			27.80			33.36			397.13		
101+38.40	TO	102+50.00	111.60	URBAN	24.22	300.33	1.50	1.25	2.00	25.23	2.78	213.88			21.02			28.01			300.33		
102+50.00	TO	105+00.00	250.00	URBAN	23.05	640.28	1.50	1.25	2.00	53.78	6.22	457.19			44.82			60.00			640.28		
105+00.00	TO	107+50.00	250.00	URBAN	21.46	595.97	1.50	1.25	1.00	50.06	3.11	414.78			41.72			53.17			595.97		
107+50.00	TO	107+89.81	39.81	URBAN	21.09	93.29	1.50	1.25	1.00	7.84	0.50	64.96			6.53			8.34			93.29		
107+89.81	TO	108+44.10	54.29	URBAN	21.13	127.43	1.50	1.25		10.70		86.01			8.92			10.70			127.43		
108+44.10	TO	109+96.46	152.36	URBAN	21.23	359.32	1.50	1.25	1.00	30.18	1.90	250.16			25.15			32.08			359.32		
STA. EQN. 109+96.46 (BK) = 110+00.00 (AH)																							
110+00.00	TO	112+50.00	250.00	URBAN	21.23	589.58	1.50	1.25	1.00	49.52	3.11	410.47			41.27			52.63			589.58		
112+50.00	TO	115+00.00	250.00	URBAN	21.09	585.83	1.50	1.25	1.00	49.21	3.11	407.93			41.01			52.32			585.83		
115+00.00	TO	117+50.00	250.00	URBAN	21.06	584.86	1.50	1.25	1.00	49.13	3.11	407.28			40.94			52.24			584.86		
117+50.00	TO	120+00.00	250.00	URBAN	21.18	588.33	1.50	1.25	1.00	49.42	3.11	409.62			41.18			52.53			588.33		
120+00.00	TO	121+25.00	125.00	URBAN	20.97	291.18	1.50	1.25		24.46		196.55			20.38			24.46			291.18		
121+25.00	TO	122+50.00	125.00	URBAN	20.80	288.89	1.50	1.25	1.00	24.27	1.56	201.25			20.22			25.83			288.89		
122+50.00	TO	125+00.00	250.00	URBAN	21.29	591.39	1.50	1.25	1.00	49.68	3.11	411.69			41.40			52.79			591.39		
125+00.00	TO	127+50.00	250.00	URBAN	21.41	594.58	1.50	1.25	1.00	49.94	3.11	413.84			41.62			53.05			594.58		
127+50.00	TO	130+00.00	250.00	URBAN	21.61	600.28	1.50	1.25	1.00	50.42	3.11	417.69			42.02			53.53			600.28		
130+00.00	TO	131+10.14	110.14	URBAN	21.82	266.97	1.50	1.25	1.00	22.43	1.37	185.72			18.69			23.80			266.97		
131+10.14	TO	132+50.00	139.86	URBAN	17.77	276.07	1.50	1.25		23.19		186.35			19.32			23.19			276.07		
WESTBOUND SUB-TOTALS =												5,484.08			552.37			702.07			7,891.19		

MODEL: $MODELNAME$
FILE NAME: pw:\\ildot-pw.bentley.com:PWIDOT\Documents\IDOT Offices\District 5\Project\D570944\CADData\CADsheets\D570944-sht-Schedules.dgn

USER NAME = Tyler.Pierson	DESIGNED -	REVISED -	
	DRAWN -	REVISED -	
PLOT SCALE = 40.0000 ' / in.	CHECKED -	REVISED -	
PLOT DATE = 1/26/2023	DATE -	REVISED -	

STATE OF ILLINOIS
DEPARTMENT OF TRANSPORTATION

SCHEDULES OF QUANTITIES

SCALE: | SHEET 5 OF SHEETS | STA. TO STA.

F.A.P. RTE.	SECTION	COUNTY	TOTAL SHEETS	SHEET NO.
709	(113)RS-7	CHAMPAIGN	103	18

CONTRACT NO. 70944

ILLINOIS | FED. AID PROJECT

SCHEDULES OF QUANTITIES

WESTBOUND PAVING SCHEDULE (CONTINUED)

STA	TO	STA	LENGTH FT	URBAN RURAL	*AVERAGE WIDTH FT	LANE AREA SQ YD	SURFACE THICKNESS IN	AVERAGE BINDER THICKNESS IN	HMA IN OUTSIDE C&G WIDTH FT	LANE HMA SURFACE TON	C&G HMA SURFACE TON	40600290 BITUMINOUS MATERIAL (TACK COAT) POUND			40602965 HMA BINDER COURSE IL-9.5FG,N50 TON			40604050 HMA SURFACE COURSE, IL-9.5 MIX "C", N50 TON			44000160 HMA SURFACE REMOVAL 2 3/4" SQ YD		
												URBAN	RURAL	STRUCTURE	URBAN	RURAL	STRUCTURE	URBAN	RURAL	STRUCTURE	URBAN	RURAL	STRUCTURE
132+50.00	TO	134+37.90	187.90	URBAN	14.03	292.81	1.50	1.25		24.60		197.64			20.50			24.60			292.81		
STA. EQN. 134+37.90 (BK) = 134+40.40 (AH)																							
134+40.40	TO	135+00.00	59.60	URBAN	13.93	92.25	1.50	1.25		7.75		62.27			6.46			7.75			92.25		
135+00.00	TO	137+50.00	250.00	URBAN	13.26	368.33	1.50	1.25		30.94		248.62			25.78			30.94			368.33		
137+50.00	TO	139+97.40	247.40	URBAN	13.04	358.32	1.50	1.25		30.10		241.86			25.08			30.10			358.32		
STA. EQN. 139+97.40 (BK) = 140+00.00 (AH)																							
140+00.00	TO	150+00.00	1,000.00	URBAN	13.34	1,482.22	1.50	1.25		124.51		1,000.50			103.76			124.51			1,482.22		
150+00.00	TO	153+82.71	382.71	URBAN	13.53	575.34	1.50	1.25		48.33		388.35			40.27			48.33			575.34		
153+82.71	TO	160+00.00	617.29	RURAL	13.50	925.59	1.50	1.25		77.75			624.78			64.79			77.75			925.59	
160+00.00	TO	170+00.00	1,000.00	RURAL	13.23	1,470.00	1.50	1.25		123.48			992.25			102.90			123.48			1,470.00	
170+00.00	TO	173+55.76	355.76	RURAL	14.07	555.97	1.50	1.25		46.70			375.28			38.92			46.70			555.97	
OMISSION - S.N. 010-0252 E-E APPR.																							
174+75.52	TO	180+00.00	524.48	RURAL	13.54	789.05	1.50	1.25		66.28			532.61			55.23			66.28			789.05	
180+00.00	TO	190+00.00	1,000.00	RURAL	12.74	1,415.56	1.50	1.25		118.91			955.50			99.09			118.91			1,415.56	
STA. EQN. 190+00.00 (BK) = 189+95.90 (AH)																							
189+95.90	TO	200+00.00	1,004.10	RURAL	12.71	1,417.45	1.50	1.25		119.07			956.78			99.22			119.07			1,417.45	
200+00.00	TO	210+00.00	1,000.00	RURAL	12.69	1,410.00	1.50	1.25		118.44			951.75			98.70			118.44			1,410.00	
210+00.00	TO	220+00.00	1,000.00	RURAL	12.81	1,423.33	1.50	1.25		119.56			960.75			99.63			119.56			1,423.33	
220+00.00	TO	230+00.00	1,000.00	RURAL	13.02	1,446.11	1.50	1.25		121.47			976.12			101.23			121.47			1,446.11	
230+00.00	TO	240+00.00	1,000.00	RURAL	13.20	1,466.11	1.50	1.25		123.15			989.62			102.63			123.15			1,466.11	
240+00.00	TO	250+00.00	1,000.00	RURAL	13.22	1,468.33	1.50	1.25		123.34			991.12			102.78			123.34			1,468.33	
250+00.00	TO	252+73.82	273.82	RURAL	13.17	400.54	1.50	1.25		33.65			270.36			28.04			33.65			400.54	
OMISSION - S.N. 010-2019 E-E APPR.																							
253+59.71	TO	260+00.00	640.29	RURAL	13.26	943.36	1.50	1.25		79.24			636.77			66.04			79.24			943.36	
260+00.00	TO	270+00.00	1,000.00	RURAL	12.72	1,413.33	1.50	1.25		118.72			954.00			98.93			118.72			1,413.33	
270+00.00	TO	280+00.00	1,000.00	RURAL	12.81	1,422.78	1.50	1.25		119.51			960.38			99.59			119.51			1,422.78	
280+00.00	TO	288+00.00	800.00	RURAL	12.87	1,144.00	1.50	1.25		96.10			772.20			80.08			96.10			1,144.00	
STA. EQN. 288+00.00 (BK) = 288+11.50 (AH)																							
288+11.50	TO	299+45.50	1,134.00	RURAL	12.86	1,620.36	1.50	1.25		136.11			1,093.74			113.43			136.11			1,620.36	
299+45.50	TO	299+98.50	53.00	STRUCTURE	12.86	75.70	1.50	1.25		6.36				51.10			5.30			6.36			75.70
299+98.50	TO	310+11.20	1,012.70	RURAL	12.87	1,448.16	1.50	1.25		121.65			977.51			101.37			121.65			1,448.16	
STA. EQN. 310+11.20 (BK) = 310+00.00 (AH)																							
310+00.00	TO	320+00.00	1,000.00	RURAL	12.85	1,427.22	1.50	1.25		119.89			963.37			99.91			119.89			1,427.22	
320+00.00	TO	330+00.00	1,000.00	RURAL	12.83	1,425.56	1.50	1.25		119.75			962.25			99.79			119.75			1,425.56	
330+00.00	TO	340+00.00	1,000.00	RURAL	12.85	1,427.22	1.50	1.25		119.89			963.37			99.91			119.89			1,427.22	
340+00.00	TO	350+00.00	1,000.00	RURAL	12.76	1,417.22	1.50	1.25		119.05			956.62			99.21			119.05			1,417.22	
350+00.00	TO	360+00.00	1,000.00	RURAL	12.64	1,404.44	1.50	1.25		117.97			948.00			98.31			117.97			1,404.44	
360+00.00	TO	370+00.00	1,000.00	RURAL	12.88	1,430.56	1.50	1.25		120.17			965.63			100.14			120.17			1,430.56	
370+00.00	TO	380+00.00	1,000.00	RURAL	12.98	1,441.67	1.50	1.25		121.10			973.13			100.92			121.10			1,441.67	
380+00.00	TO	390+00.00	1,000.00	RURAL	12.86	1,428.33	1.50	1.25		119.98			964.12			99.98			119.98			1,428.33	
390+00.00	TO	400+00.00	1,000.00	RURAL	12.96	1,440.00	1.50	1.25		120.96			972.00			100.80			120.96			1,440.00	
400+00.00	TO	410+00.00	1,000.00	RURAL	13.02	1,446.11	1.50	1.25		121.47			976.12			101.23			121.47			1,446.11	
410+00.00	TO	420+00.00	1,000.00	RURAL	13.05	1,449.44	1.50	1.25		121.75			978.37			101.46			121.75			1,449.44	
420+00.00	TO	423+00.00	300.00	RURAL	13.20	439.83	1.50	1.25		36.95			296.88			30.79			36.95			439.83	
WESTBOUND URBAN / RURAL TOTALS =												7,623.32	25,891.38	51.10	774.22	2,685.05	5.30	968.30	3,222.06	6.36	11,060.46	38,357.63	75.70
WESTBOUND URBAN / RURAL ROUNDED TOTALS =												7,624.00	25,892.00	52.00	775.00	2,686.00	6.00	969.00	3,223.00	7.00	11,061.00	38,358.00	76.00
WESTBOUND TOTALS =													33,568.00			3,467.00			4,199.00			49,495.00	
URBAN / RURAL ROUNDED TOTALS =												18,429.00	52,201.00	99.00	1,870.00	5,310.00	11.00	2,345.00	6,372.00	13.00	26,699.00	77,335.00	146.00
TOTALS =													70,729.00			7,191.00			8,730.00			104,180.00	

MODEL: $MODELNAME$
FILE NAME: pw:\\ildot-pw.bentley.com:PWIDOT\Documents\IDOT Offices\District 5\Projects\D570944\CADData\CADsheets\D570944-sht-Schedules.dgn

USER NAME = Tyler.Pierson	DESIGNED -	REVISED -	
	DRAWN -	REVISED -	
PLOT SCALE = 40.0000 ' / in.	CHECKED -	REVISED -	
PLOT DATE = 1/26/2023	DATE -	REVISED -	

STATE OF ILLINOIS
DEPARTMENT OF TRANSPORTATION

SCHEDULES OF QUANTITIES

SCALE: | SHEET 6 OF SHEETS | STA. TO STA.

F.A.P. RTE.	SECTION	COUNTY	TOTAL SHEETS	SHEET NO.
709	(113)RS-7	CHAMPAIGN	103	19
		CONTRACT NO. 70944		
		ILLINOIS	FED. AID PROJECT	

SCHEDULES OF QUANTITIES

LONGITUDINAL JOINT SEALANT SCHEDULE

STA	TO	STA	LENGTH FT	URBAN RURAL	DESCRIPTION	NUMBER OF LONGITUDINAL JOINTS	40600370 LONGITUDINAL JOINT SEALANT FT URBAN	40600370 LONGITUDINAL JOINT SEALANT FT RURAL
2362+00.00	TO	2362+39.04	39.04	URBAN	LANE LINES	4.00	156.16	
STA. EQN. 2362+39.04 (BK) = 100+00 (AH)								
100+00.00	TO	109+96.46	996.46	URBAN	LANE LINES	4.00	3,985.84	
STA. EQN. 109+96.46 (BK) = 110+00.00 (AH)								
110+00.00	TO	130+88.39	2,088.39	URBAN	LANE LINES	5.00	10,441.95	
109+96.46	TO	132+47.41	2,250.95	URBAN	LANE LINES	3.00	6,752.85	
132+47.41	TO	134+37.90	190.49	URBAN	LANE LINES	2.00	380.98	
STA. EQN. 134+37.90 (BK) = 134+40.40 (AH)								
134+40.40	TO	139+97.40	557.00	URBAN	LANE LINES	2.00	1,114.00	
STA. EQN. 139+97.40 (BK) = 140+00.00 (AH)								
140+00.00	TO	141+41.01	141.01	URBAN	LANE LINES	2.00	282.02	
141+41.01	TO	153+82.71	1,241.70	URBAN	CENTERLINE	1.00	1,241.70	
153+82.71	TO	173+55.76	1,973.05	RURAL	CENTERLINE	1.00		1,973.05
OMISSION - S.N. 010-0252 E-E APPR.								
174+75.52	TO	190+00.00	1,524.48	RURAL	CENTERLINE	1.00		1,524.48
STA. EQN. 190+00.00 (BK) = 189+95.90 (AH)								
189+95.90	TO	252+73.82	6,277.92	RURAL	CENTERLINE	1.00		6,277.92
OMISSION - S.N. 010-0252 E-E APPR.								
253+59.71	TO	288+00.00	3,440.29	RURAL	CENTERLINE	1.00		3,440.29
STA. EQN. 288+00.00 (BK) = 288+11.50 (AH)								
288+11.50	TO	310+11.20	2,199.70	RURAL	CENTERLINE	1.00		2,199.70
STA. EQN. 310+11.20 (BK) = 310+00.00 (AH)								
310+00.00	TO	423+00.00	11,300.00	RURAL	CENTERLINE	1.00		11,300.00
URBAN / RURAL TOTALS =							24,355.50	26,715.44
URBAN / RURAL ROUNDED TOTALS =							24,356.00	26,716.00
TOTALS =							51,072.00	

EASTBOUND HMA SHOULDER RESURFACING

STA	TO	STA	LENGTH FT	URBAN RURAL	AVERAGE SHOULDER WIDTH FT	SHOULDER AREA SQ FT	SHOULDER THICKNESS IN	40600290 BITUMINOUS MATERIALS (TACK COAT) POUND	44000155 HMA REMOVAL 1.5" SQ YD	48203100 HMA SHOULDERS TON	64200108 SHOULDER RUMBLE STRIPS, 8 INCH FOOT
139+82.17	TO	153+49.62	1,367.45	URBAN	3.25	4,444.21	1.50	290.58	493.80	41.48	1,367.45
OMISSION - TOWNSHIP HIGHWAY 178E											
154+18.71	TO	159+66.41	547.70	RURAL	3.00	1,643.10	1.50	109.55	182.57	15.34	547.70
OMISSION - F.E. #005											
160+72.83	TO	170+93.52	1,020.69	RURAL	3.00	3,062.07	1.50	204.13	340.23	28.58	1,020.69
OMISSION - F.E. #006											
171+14.37	TO	173+56.15	241.78	RURAL	3.00	725.34	1.50	48.36	80.59	6.77	241.78
EASTBOUND TOTALS =								652.62	1,097.19	92.17	3,177.62
EASTBOUND ROUNDED URBAN TOTALS =								291.00	494.00	42.00	1,368.00
EASTBOUND ROUNDED RURAL TOTALS =								363.00	604.00	51.00	1,811.00
EASTBOUND ROUNDED TOTALS =								654.00	1,098.00	93.00	3,179.00

40600290 QUANTITIES CONTINUE IN EASTBOUND & WESTBOUND PAVING SCHEDULE

WESTBOUND HMA SHOULDER RESURFACING

STA	TO	STA	LENGTH FT	URBAN RURAL	AVERAGE SHOULDER WIDTH FT	SHOULDER AREA SQ FT	SHOULDER THICKNESS IN	40600290 BITUMINOUS MATERIALS (TACK COAT) POUND	44000155 HMA REMOVAL 1.5" SQ YD	48203100 HMA SHOULDERS TON	64200108 SHOULDER RUMBLE STRIPS, 8 INCH FOOT
147+87.10	TO	153+53.49	566.39	URBAN	4.31	2,441.14	1.50	150.38	271.24	22.78	566.39
WESTBOUND TOTALS =								150.38	271.24	22.78	566.39
WESTBOUND ROUNDED URBAN TOTALS =								151.00	272.00	23.00	567.00
WESTBOUND ROUNDED RURAL TOTALS =								0.00	0.00	0.00	0.00
URBAN TOTALS =								442.00	766.00	65.00	1,935.00
RURAL TOTALS =								363.00	604.00	51.00	1,811.00
TOTALS =								805.00	1,370.00	116.00	3,746.00

40600290 QUANTITIES CONTINUE IN EASTBOUND & WESTBOUND PAVING SCHEDULE

TEMPORARY RAMP SCHEDULE

	STA	DIRECTION	LOCATION	REASON FOR RAMP	RAISE/ DROPOFF HEIGHT IN	RAMP LENGTH FT	RAMP WIDTH FT	40600990 ROADWAY TEMPORARY RAMP SQ YD URBAN	40600990 ROADWAY TEMPORARY RAMP SQ YD RURAL
*	2362+00.00	BOTH	WESTERN PROJECT LIMITS	ML MILLED 2.75"	2.75	9.2	64.5	65.93	
*				ML BINDER PLACED	1.50	5	64.5	35.83	
	100+59.00	EB	S MAPLEWOOD DR	ML MILLED 2.75"	2.75	1	145.8	16.20	
	100+59.00	WB	N MAPLEWOOD DR	ML MILLED 2.75"	2.75	1	142.8	15.87	
	108+16.68	WB	BETHANY PARK DR	ML MILLED 2.75"	2.75	1	54.3	6.03	
	120+65.50	WB	LON DR	ML MILLED 2.75"	2.75	1	121.6	13.51	
	120+77.05	EB	LON DR	ML MILLED 2.75"	2.75	1	85.5	9.50	
	152+81.99	WB	TOWNSHIP HIGHWAY 178 E	ML MILLED 2.75"	2.75	1	80.7	8.97	
	152+81.99	EB	TOWNSHIP HIGHWAY 178 E	ML MILLED 2.75"	2.75	1	69.1	7.68	
*	173+55.74	BOTH	S.N. 010-0252	ML MILLED 2.75"	2.75	9.2	28.7		29.34
*				ML BINDER PLACED	1.50	5	28.7		15.94
*	174+75.52	BOTH	S.N. 010-0252	ML MILLED 2.75"	2.75	9.2	28.1		28.72
*				ML BINDER PLACED	1.50	5	28.1		15.61
	207+65.89	WB	CR 1900E	ML MILLED 2.75"	2.75	1	88.8		9.87
	208+55.34	EB	CR 1900E	ML MILLED 2.75"	2.75	1	66.9		7.43
*	252+73.82	BOTH	S.N. 010-2019	ML MILLED 2.75"	2.75	9.2	25.9		26.48
*				ML BINDER PLACED	1.50	5	25.9		14.39
*	253+59.71	BOTH	S.N. 010-2019	ML MILLED 2.75"	2.75	9.2	26.5		27.09
*				ML BINDER PLACED	1.50	5	26.5		14.72
	260+39.95	WB	CR 2000E	ML MILLED 2.75"	2.75	1	87.8		9.76
	261+41.37	EB	CR 2000E	ML MILLED 2.75"	2.75	1	96.8		10.76
	314+24.47	WB	CR 2100E	ML MILLED 2.75"	2.75	1	79.8		8.87
	314+86.51	EB	CR 2100E	ML MILLED 2.75"	2.75	1	67.2		7.47
	367+77.22	EB	CR 2200E	ML MILLED 2.75"	2.75	1	69.1		7.68
	413+77.90	EB	EILER DR	ML MILLED 2.75"	2.75	1	112.4		12.49
	416+92.23	WB	N WEST ST	ML MILLED 2.75"	2.75	1	121.2		13.47
	416+94.93	EB	N WEST ST	ML MILLED 2.75"	2.75	1	64		7.11
	421+71.95	EB	MAIN STREET	ML MILLED 2.75"	2.75	1	151.1		16.79
	421+73.30	WB	MAIN STREET	ML MILLED 2.75"	2.75	1	176.1		19.57
**	2362+00.00	BOTH	EASTERN PROJECT LIMITS	ML MILLED 2.75"	2.75	9.2	27.1		27.70
**				ML BINDER PLACED	1.50	5	27.1		15.06
URBAN RURAL TOTALS =								179.52	346.32
URBAN RURAL ROUNDED TOTALS =								180.00	347.00
TOTALS =								527.00	

* 1:40 TAPER

**1:40 TAPER & TEMPORARY RAMPS NOT PLACED BEHIND ISLANDS

SCHEDULES OF QUANTITIES

INCIDENTAL HMA RESURFACING SCHEDULE

STA	DIRECTION	LOCATION	ENTRANCE MATERIAL	APRON MATERIAL	RESURFACING AREA SQ FT	AVG HMA THICKNESS IN	URBAN RURAL	40800029 URBAN BITUMINOUS MATERIAL (TACK COAT) POUND	40800029 RURAL	40800050 URBAN INCIDENTAL HMA SURFACING TON	40800050 RURAL	X4400196 URBAN HMA SURFACE REMOVAL SPECIAL SQ YD	X4400196 RURAL
100+59.00	WB	N MAPLEWOOD DR	HMA	N/A	3,860.98	1.50	URBAN	193.05		36.04		429.00	
100+59.00	EB	S MAPLEWOOD DR	HMA	N/A	3,707.11	1.50	URBAN	185.36		34.60		411.90	
103+33.08	EB	C.E. #005	PCC	HMA	260.41	1.50	URBAN	13.02		2.43		28.93	
106+39.70	WB	C.E. #007	GRASS	HMA	332.41	1.50	URBAN	16.62		3.10		36.93	
108+16.68	WB	BETHANY PARK DR	HMA	N/A	673.68	1.50	URBAN	33.68		6.29		74.85	
111+31.42	EB	C.E. #011	HMA	N/A	581.87	1.50	URBAN	29.09		5.43		64.65	
114+15.30	EB	C.E. #016	HMA	HMA	451.27	1.50	URBAN	22.56		4.21		50.14	
120+65.50	WB	LON DR	HMA	N/A	2,693.23	1.50	URBAN	134.66		25.14		299.25	
120+77.05	EB	LON DR	HMA	N/A	1,567.92	1.50	URBAN	78.40		14.63		174.21	
123+80.07	EB	C.E. #020	HMA	HMA	198.32	1.50	URBAN	9.92		1.85		22.04	
123+81.04	WB	C.E. #021	HMA	HMA	975.11	1.50	URBAN	48.76		9.10		108.35	
124+52.16	EB	C.E. #022	HMA	HMA	187.89	1.50	URBAN	9.39		1.75		20.88	
124+63.03	WB	UTILITY #001	AGG	HMA	481.29	1.50	URBAN	24.06		4.49		53.48	
126+29.71	EB	C.E. #023	PCC	HMA	242.62	1.50	URBAN	12.13		2.26		26.96	
126+91.57	EB	C.E. #024	PCC	HMA	267.75	1.50	URBAN	13.39		2.50		29.75	
130+45.89	EB	C.E. #025	PCC	HMA	579.13	1.50	URBAN	28.96		5.41		64.35	
132+39.43	EB	C.E. #026	PCC	HMA	588.57	1.50	URBAN	29.43		5.49		65.40	
134+09.41	WB	UTILITY #002	HMA	HMA	1,121.10	1.50	URBAN	56.06		10.46		124.57	
137+06.74	EB	C.E. #027	PCC	HMA	683.82	1.50	URBAN	34.19		6.38		75.98	
153+81.99	WB	TOWNSHIP HIGHWAY 178E	HMA	N/A	1,275.49	1.50	URBAN	63.77		11.90		141.72	
153+82.11	EB	TOWNSHIP HIGHWAY 178E	HMA	N/A	895.92	1.50	URBAN	44.80		8.36		99.55	
160+51.75	EB	F.E. #005	GRASS	HMA	523.40	1.50	URBAN	26.17		4.89		58.16	
207+65.89	WB	CR 1900E	HMA	N/A	975.62	1.50	RURAL		48.78		9.11		108.40
208+55.34	EB	CR 1900E	HMA	N/A	929.32	1.50	RURAL		46.47		8.67		103.26
213+61.87	WB	C.E. #031	HMA	HMA	1,670.43	1.50	RURAL		83.52		15.59		185.60
221+69.51	WB	C.E. #033	HMA	HMA	978.11	1.50	RURAL		48.91		9.13		108.68
228+58.94	WB	C.E. #037	HMA	HMA	970.59	1.50	RURAL		48.53		9.06		107.84
230+59.12	WB	C.E. #038	PCC	HMA	610.77	1.50	RURAL		30.54		5.70		67.86
234+59.00	WB	P.E. #007	PCC	HMA	347.06	1.50	RURAL		17.35		3.24		38.56
242+65.45	WB	P.E. #019	HMA	HMA	572.16	1.50	RURAL		28.61		5.34		63.57
243+00.15	EB	P.E. #020	HMA	HMA	468.76	1.50	RURAL		23.44		4.38		52.08
244+71.77	WB	P.E. #022	HMA	HMA	656.23	1.50	RURAL		32.81		6.12		72.91
251+90.06	EB	P.E. #030	HMA	N/A	338.76	1.50	RURAL		16.94		3.16		37.64
260+39.02	WB	CR 2000E	HMA	N/A	1,354.69	1.50	RURAL		67.73		12.64		150.52
261+41.37	EB	CR 2000E	HMA	N/A	2,003.49	1.50	RURAL		100.17		18.70		222.61
314+24.47	WB	CR 2100E	HMA	N/A	1,118.87	1.50	RURAL		55.94		10.44		124.32
314+86.51	EB	CR 2100E	HMA	N/A	1,337.39	1.50	RURAL		66.87		12.48		148.60
367+77.22	EB	CR 2200E	HMA	N/A	1,082.67	1.50	RURAL		54.13		10.10		120.30
413+77.90	EB	EILER DR	HMA	N/A	2,325.83	1.50	RURAL		116.29		21.71		258.43
416+92.23	WB	N WEST ST	HMA	N/A	2,962.98	1.50	RURAL		148.15		27.65		329.22
416+94.93	EB	N WEST ST	HMA	N/A	949.44	1.50	RURAL		47.47		8.86		105.49
421+71.95	EB	MAIN ST	HMA	N/A	5,377.59	1.50	RURAL		268.88		50.19		597.51
421+73.30	WB	MAIN ST	HMA	N/A	5,086.17	1.50	RURAL		254.31		47.47		565.13
							URBAN RURAL TOTALS =	1,107.47	493.63	206.71	92.14	2,461.05	1,096.92
							ROUNDED URBAN RURAL TOTALS =	1,108.00	494.00	207.00	93.00	2,462.00	1,097.00
							TOTALS =	1,602.00		300.00		3,559.00	

40800029 AND 40800050 QUANTITIES CONTINUE IN INCIDENTAL ENTRANCE SCHEDULE

SIDEWALK SCHEDULE

LOCATION	QUADRANT	42400200 URBAN PCC SIDEWALK 5 IN SQ FT	42400800 URBAN DETECTABLE WARNING SQ FT
BETHANY PARK DR	NORTHWEST	134.29	8.00
LON DR	NORTHWEST	201.31	21.42
LON DR	NORTHEAST	127.80	9.78
LON DR	SOUTHWEST	225.62	20.00
LON DR	SOUTHEAST	107.72	0.00
	TOTALS =	796.74	59.20
	ROUNDED TOTALS =	797.00	60.00

*EXCAVATION REQUIRED FOR SIDEWALK CONSTRUCTION SHALL BE INCLUDED IN THE COST OF SIDEWALK REMOVAL

GUTTER REMOVAL SCHEDULE

LOCATION	QUADRANT	44000500 URBAN COMBINATION CURB & GUTTER REMOVAL FOOT	44000500 RURAL COMBINATION CURB & GUTTER REMOVAL FOOT
BETHANY PARK DR	NORTHWEST	11.26	
LON DR	NORTHWEST	31.96	
LON DR	NORTHEAST	31.46	
LON DR	SOUTHWEST	51.87	
LON DR	SOUTHEAST	20.00	
C.E. #031	-		20.00
	URBAN RURAL TOTALS =	146.55	20.00
	URBAN RURAL ROUNDED TOTALS =	147.00	20.00
	TOTALS =	167.00	

SIDEWALK REMOVAL SCHEDULE

LOCATION	QUADRANT	44000600 URBAN SIDEWALK REMOVAL SQ FT
BETHANY PARK DR	NORTHWEST	133.10
LON DR	NORTHWEST	204.16
LON DR	NORTHEAST	181.90
LON DR	SOUTHWEST	234.01
LON DR	SOUTHEAST	112.45
	TOTALS =	865.62
	ROUNDED TOTALS =	866.00

SCHEDULES OF QUANTITIES

COMBINATION C&G SCHEDULE

LOCATION	QUADRANT	60604900 URBAN COMBINATION CURB & GUTTER TYPE B-6.18 (VAR. WIDTH GUTTER FLAG) FOOT	60605500 URBAN COMBINATION CURB & GUTTER TYPE B-6.24 (VAR. WIDTH GUTTER FLAG) FOOT
BETHANY PARK DR	NORTHWEST	11.26	
LON DR	NORTHWEST	31.96	
LON DR	NORTHEAST	31.46	
LON DR	SOUTHWEST		51.87
LON DR	SOUTHEAST		17.29
TOTALS =		74.68	69.16
ROUNDED TOTALS =		75.00	70.00

CLASS D PATCHES. 15 IN SCHEDULE

STA	DIRECTION	URBAN RURAL	LENGTH FT	WIDTH FT	AREA SQ YD	44201827 URBAN CLASS D PATCHES TYPE II 15 INCH SQ YD	44201827 RURAL CLASS D PATCHES TYPE II 15 INCH SQ YD	44201831 RURAL CLASS D PATCHES TYPE III 15 INCH SQ YD	44201833 RURAL CLASS D PATCHES TYPE III 15 INCH SQ YD
124+45.00	EB - DL	URBAN	6.00	11.00	7.33	7.33	0.00	0.00	0.00
124+45.00	EB - PL	URBAN	6.00	11.00	7.33	7.33	0.00	0.00	0.00
124+45.00	TWLTL	URBAN	6.00	10.00	6.67	6.67	0.00	0.00	0.00
124+45.00	WB - DL	URBAN	6.00	11.00	7.33	7.33	0.00	0.00	0.00
124+45.00	WB - PL	URBAN	6.00	11.00	7.33	7.33	0.00	0.00	0.00
137+28.00	WB	URBAN	6.00	12.00	8.00	8.00	0.00	0.00	0.00
234+55.00	EB	RURAL	10.00	12.00	13.33	0.00	13.33	0.00	0.00
246+91.00	EB	RURAL	6.00	12.00	8.00	0.00	8.00	0.00	0.00
246+91.00	WB	RURAL	10.00	12.00	13.33	0.00	13.33	0.00	0.00
251+85.00	EB	RURAL	100.00	12.00	133.33	0.00	0.00	0.00	133.33
255+04.00	EB	RURAL	6.00	50.00	33.33	0.00	0.00	0.00	33.33
255+04.00	WB	RURAL	12.00	100.00	133.33	0.00	0.00	0.00	133.33
282+23.00	EB	RURAL	4.00	12.00	5.33	0.00	5.33	0.00	0.00
282+23.00	WB	RURAL	8.00	12.00	10.67	0.00	10.67	0.00	0.00
286+02.00	WB	RURAL	8.00	12.00	10.67	0.00	10.67	0.00	0.00
286+02.00	EB	RURAL	4.00	12.00	5.33	0.00	5.33	0.00	0.00
323+94.00	EB	RURAL	4.00	12.00	5.33	0.00	5.33	0.00	0.00
323+94.00	WB	RURAL	4.00	12.00	5.33	0.00	5.33	0.00	0.00
329+94.00	EB	RURAL	4.00	12.00	5.33	0.00	5.33	0.00	0.00
329+94.00	WB	RURAL	4.00	12.00	5.33	0.00	5.33	0.00	0.00
336+83.00	EB	RURAL	4.00	12.00	5.33	0.00	5.33	0.00	0.00
336+83.00	WB	RURAL	4.00	12.00	5.33	0.00	5.33	0.00	0.00
338+38.00	EB	RURAL	4.00	12.00	5.33	0.00	5.33	0.00	0.00
338+38.00	WB	RURAL	4.00	12.00	5.33	0.00	5.33	0.00	0.00
345+71.00	EB	RURAL	4.00	12.00	5.33	0.00	5.33	0.00	0.00
345+71.00	WB	RURAL	4.00	12.00	5.33	0.00	5.33	0.00	0.00
346+70.00	EB	RURAL	4.00	12.00	5.33	0.00	5.33	0.00	0.00
408+53.00	WB	RURAL	12.00	12.00	16.00	0.00	0.00	16.00	0.00
408+53.00	EB	RURAL	4.00	12.00	5.33	0.00	5.33	0.00	0.00
411+60.00	EB	RURAL	8.00	12.00	10.67	0.00	10.67	0.00	0.00
411+60.00	WB	RURAL	8.00	12.00	10.67	0.00	10.67	0.00	0.00
412+45.00	EB	RURAL	6.00	12.00	8.00	0.00	8.00	0.00	0.00
412+45.00	WB	RURAL	6.00	12.00	8.00	0.00	8.00	0.00	0.00
414+65.00	EB	RURAL	8.00	12.00	10.67	0.00	10.67	0.00	0.00
414+65.00	WB	RURAL	8.00	12.00	10.67	0.00	10.67	0.00	0.00
416+84.00	EB	RURAL	30.00	12.00	40.00	0.00	0.00	0.00	40.00
416+84.00	WB	RURAL	30.00	12.00	40.00	0.00	0.00	0.00	40.00
421+48.00	EB	RURAL	6.00	12.00	8.00	0.00	8.00	0.00	0.00
421+48.00	WB	RURAL	6.00	12.00	8.00	0.00	8.00	0.00	0.00
URBAN RURAL TOTALS =						43.99	205.30	16.00	379.99
URBAN RURAL ROUNDED TOTALS =						44.00	206.00	16.00	380.00
TOTALS =						250.00		16.00	380.00

EB AGGREGATE WEDGE SHOULDER, TYPE B SCHEDULE

STA	TO	STA	URBAN RURAL	LENGTH FT	WIDTH FT	AREA SQ YD	AVERAGE THICKNESS IN	48102100 URBAN AGGREGATE WEDGE SHOULDER, TYPE B TON	48102100 RURAL AGGREGATE WEDGE SHOULDER, TYPE B TON
139+83.36	TO	139+97.40	URBAN	14.04	3.00	4.68	3.00	0.70	
STA. EQN. STA. 139+97.40 (BK) TO STA. 140+00.00 (AH)									
140+00.00	TO	153+58.04	URBAN	1,358.04	3.00	452.68	3.00	67.90	
153+58.04	TO	153+82.71	RURAL	24.67	3.00	8.22	3.00		1.23
OMISSION - TOWNSHIP HIGHWAY 178E									
154+04.95	TO	159+75.58	RURAL	570.63	3.00	190.21	3.00		28.53
OMISSION - F.E. #005									
160+67.88	TO	173+56.24	RURAL	1,288.36	3.00	429.45	3.00		64.42
OMISSION - S.N. 010-0252									
174+85.25	TO	190+00.00	RURAL	1,514.75	3.00	504.92	3.00		75.74
STA. EQN. STA. 190+00.00 (BK) TO STA. 189+95.90 (AH)									
189+95.90	TO	193+88.23	RURAL	392.33	3.00	130.78	3.00		19.62
OMISSION - P.E. #003									
194+26.50	TO	195+21.46	RURAL	94.96	3.00	31.65	3.00		4.75
OMISSION - MAILBOX TURNOUT #001									
195+62.54	TO	208+31.95	RURAL	1,269.41	3.00	423.14	3.00		63.47
OMISSION - CR 1900 E									
208+76.68	TO	242+90.93	RURAL	3,414.25	3.00	1,138.08	3.00		170.71
OMISSION - P.E. #020									
243+09.36	TO	251+81.55	RURAL	872.19	3.00	290.73	3.00		43.61
OMISSION - P.E. #030									
251+98.07	TO	253+03.94	RURAL	105.87	3.00	35.29	3.00		5.29
OMISSION - S.N. 010-2019									
253+55.18	TO	260+14.34	RURAL	659.16	3.00	219.72	3.00		32.96
OMISSION - P.E. #031									
260+55.22	TO	260+97.41	RURAL	42.19	3.00	14.06	3.00		2.11
OMISSION - CR 2000 E									
261+69.88	TO	268+65.23	RURAL	695.35	3.00	231.78	3.00		34.77
OMISSION - P.E. #032									
269+16.15	TO	288+00.00	RURAL	1,883.85	3.00	627.95	3.00		94.19
STA. EQN. STA. 288+00.00 (BK) TO STA. 288+11.50 (AH)									
288+11.50	TO	296+45.74	RURAL	834.24	3.00	278.08	3.00		41.71
OMISSION - MAILBOX TURNOUT #002									
296+67.06	TO	299+52.61	RURAL	285.55	3.00	95.18	3.00		14.28
OMISSION - S.N. 010-0257									
300+01.49	TO	308+12.45	RURAL	810.96	3.00	270.32	3.00		40.55
OMISSION - MAILBOX TURNOUT #003									
308+45.20	TO	314+57.73	RURAL	612.53	3.00	204.18	3.00		30.63
OMISSION - CR 2100 E									
315+09.51	TO	326+71.11	RURAL	1,161.60	3.00	387.20	3.00		58.08
OMISSION - P.E. #043									
327+09.42	TO	357+24.59	RURAL	3,015.17	3.00	1,005.06	3.00		150.76
OMISSION - P.E. #048									
357+69.30	TO	367+50.12	RURAL	980.82	3.00	326.94	3.00		49.04
OMISSION - CR 2200 E									
368+04.00	TO	369+71.57	RURAL	167.57	3.00	55.86	3.00		8.38
OMISSION - C.E. #039									
370+27.64	TO	371+99.26	RURAL	171.62	3.00	57.21	3.00		8.58
OMISSION - C.E. #040									
372+71.87	TO	397+28.34	RURAL	2,456.47	3.00	818.82	3.00		122.82
OMISSION - P.E. #054									
397+61.44	TO	398+36.93	RURAL	75.49	3.00	25.16	3.00		3.77
OMISSION - P.E. #055									
398+95.29	TO	413+31.53	RURAL	1,436.24	3.00	478.75	3.00		71.81
OMISSION - EILER DR									
414+20.29	TO	416+73.91	RURAL	253.62	3.00	84.54	3.00		12.68
OMISSION - N WEST ST									
417+18.35	TO	420+07.30	RURAL	288.95	3.00	96.32	3.00		14.45
OMISSION - C.E. #044									
420+59.30	TO	421+15.78	RURAL	56.48	3.00	18.83	3.00		2.82
EB URBAN / RURAL TOTALS =								68.60	1,271.76
ROUNDED EB URBAN / RURAL TOTALS =								69.00	1,272.00
EB TOTALS =								1,341.00	

MODEL: SMODELNAMES
FILE NAME: pw:\\ildot-pw.bentley.com:PWIDOT\Documents\IDOT Offices\District 5\Projects\D570944\CADData\CADsheets\D570944-sht-Schedules.dgn

USER NAME = Tyler.Pierson	DESIGNED -	REVISED -
	DRAWN -	REVISED -
PLOT SCALE = 40.0000 ' / in.	CHECKED -	REVISED -
PLOT DATE = 1/26/2023	DATE -	REVISED -

STATE OF ILLINOIS
DEPARTMENT OF TRANSPORTATION

SCHEDULES OF QUANTITIES

SCALE: | SHEET 9 OF SHEETS | STA. TO STA.

F.A.P. RTE.	SECTION	COUNTY	TOTAL SHEETS	SHEET NO.
709	(113)RS-7	CHAMPAIGN	103	22
		CONTRACT NO. 70944		
		ILLINOIS FED. AID PROJECT		

SCHEDULES OF QUANTITIES

WB AGGREGATE WEDGE SHOULDER, TYPE B SCHEDULE

STA	TO	STA	URBAN RURAL	LENGTH FT	WIDTH FT	AREA SQ YD	AVERAGE THICKNESS IN	48102100 AGGREGATE WEDGE SHOULDER, TYPE B TON URBAN	48102100 AGGREGATE WEDGE SHOULDER, TYPE B TON RURAL
131+10.46	TO	131+87.85	URBAN	77.39	3.00	25.80	3.00	3.87	
OMISSION - U.E. #002									
134+32.07	TO	134+37.90	URBAN	5.83	3.00	1.94	3.00	0.29	
STA. EQN. STA. 134+37.90 (BK) TO STA. 134+40.40 (AH)									
134+40.40	TO	134+85.75	URBAN	45.35	3.00	15.12	3.00	2.27	
OMISSION - U.E. #003									
135+53.24	TO	139+97.40	URBAN	444.16	3.00	148.05	3.00	22.21	
STA. EQN. STA. 139+97.40 (BK) TO STA. 140+00.00 (AH)									
140+00.00	TO	140+11.78	URBAN	11.78	3.00	3.93	3.00	0.59	
OMISSION - U.E. #004									
140+67.77	TO	143+37.95	URBAN	270.18	3.00	90.06	3.00	13.51	
OMISSION - F.E. #002									
144+07.13	TO	153+58.90	URBAN	951.77	3.00	317.26	3.00	47.59	
OMISSION - TOWNSHIP HIGHWAY 178E									
154+21.24	TO	168+10.35	RURAL	1,389.11	3.00	463.04	3.00		69.46
OMISSION - C.E. #028									
168+38.90	TO	170+27.33	RURAL	188.43	3.00	62.81	3.00		9.42
OMISSION - C.E. #029									
170+55.46	TO	172+32.02	RURAL	176.56	3.00	58.85	3.00		8.83
OMISSION - C.E. #030									
172+61.42	TO	173+55.50	RURAL	94.08	3.00	31.36	3.00		4.70
OMISSION - S.N. 010-0252									
174+85.66	TO	190+00.00	RURAL	1,514.34	3.00	504.78	3.00		75.72
STA. EQN. STA. 190+00.00 (BK) TO STA. 189+95.90 (AH)									
189+95.90	TO	207+40.90	RURAL	1,745.00	3.00	581.67	3.00		87.25
OMISSION - CR 1900E									
207+89.35	TO	211+33.49	RURAL	344.14	3.00	114.71	3.00		17.21
OMISSION - P.E. #004									
211+74.76	TO	213+09.51	RURAL	134.75	3.00	44.92	3.00		6.74
OMISSION - C.E. #031									
214+06.45	TO	220+48.12	RURAL	641.67	3.00	213.89	3.00		32.08
OMISSION - C.E. #032									
221+03.81	TO	221+40.32	RURAL	36.51	3.00	12.17	3.00		1.83
OMISSION - C.E. #033									
221+94.19	TO	224+26.99	RURAL	232.80	3.00	77.60	3.00		11.64
OMISSION - C.E. #034									
224+87.90	TO	225+47.01	RURAL	59.11	3.00	19.70	3.00		2.96
OMISSION - C.E. #035									
225+90.70	TO	226+23.60	RURAL	32.90	3.00	10.97	3.00		1.65
OMISSION - C.E. #036									
226+96.19	TO	228+24.08	RURAL	127.89	3.00	42.63	3.00		6.39
OMISSION - C.E. #037									
228+82.06	TO	230+38.92	RURAL	156.86	3.00	52.29	3.00		7.84
OMISSION - C.E. #038									
230+82.33	TO	231+49.34	RURAL	67.01	3.00	22.34	3.00		3.35
OMISSION - P.E. #005									
231+84.86	TO	232+89.84	RURAL	104.98	3.00	34.99	3.00		5.25
OMISSION - P.E. #006									
233+26.52	TO	234+43.28	RURAL	116.76	3.00	38.92	3.00		5.84
OMISSION - P.E. #007									
234+75.34	TO	235+01.93	RURAL	26.59	3.00	8.86	3.00		1.33
OMISSION - P.E. #008									
235+33.11	TO	236+77.30	RURAL	144.19	3.00	48.06	3.00		7.21
OMISSION - P.E. #012									
237+10.21	TO	237+93.15	RURAL	82.94	3.00	27.65	3.00		4.15
OMISSION - P.E. #013									
238+26.24	TO	238+98.15	RURAL	71.91	3.00	23.97	3.00		3.60
OMISSION - P.E. #015									
239+32.11	TO	240+04.04	RURAL	71.93	3.00	23.98	3.00		3.60
OMISSION - P.E. #016									
240+36.93	TO	241+17.01	RURAL	80.08	3.00	26.69	3.00		4.00
OMISSION - P.E. #018									
							WESTBOUND SUB-TOTALS =	90.33	382.05

WB AGGREGATE WEDGE SHOULDER, TYPE B SCHEDULE (CONTINUED)

STA	TO	STA	URBAN RURAL	LENGTH FT	WIDTH FT	AREA SQ YD	AVERAGE THICKNESS IN	48102100 AGGREGATE WEDGE SHOULDER, TYPE B TON URBAN	48102100 AGGREGATE WEDGE SHOULDER, TYPE B TON RURAL
241+51.37	TO	242+51.44	RURAL	100.07	3.00	33.36	3.00		5.00
OMISSION - P.E. #019									
242+80.68	TO	244+53.21	RURAL	172.53	3.00	57.51	3.00		8.63
OMISSION - P.E. #022									
244+89.22	TO	252+76.30	RURAL	787.08	3.00	262.36	3.00		39.35
OMISSION - S.N.010-2019									
253+30.97	TO	260+09.86	RURAL	678.89	3.00	226.30	3.00		33.95
OMISSION - CR 2000 E									
260+72.02	TO	279+51.12	RURAL	1,879.10	3.00	626.37	3.00		93.96
OMISSION - P.E. #033									
279+90.02	TO	281+01.46	RURAL	111.44	3.00	37.15	3.00		5.57
OMISSION - P.E. #034									
281+31.40	TO	288+81.48	RURAL	750.08	3.00	250.03	3.00		37.50
OMISSION - P.E. #035									
289+17.33	TO	290+38.20	RURAL	120.87	3.00	40.29	3.00		6.04
OMISSION - P.E. #036									
290+70.21	TO	292+50.23	RURAL	180.02	3.00	60.01	3.00		9.00
OMISSION - P.E. #037									
292+93.60	TO	293+24.45	RURAL	30.85	3.00	10.28	3.00		1.54
OMISSION - P.E. #038									
293+56.93	TO	296+35.63	RURAL	278.70	3.00	92.90	3.00		13.94
OMISSION - P.E. #039									
296+82.53	TO	298+28.14	RURAL	145.61	3.00	48.54	3.00		7.28
OMISSION - P.E. #040									
298+79.32	TO	299+52.64	RURAL	73.32	3.00	24.44	3.00		3.67
OMISSION - S.N. 010-0257									
300+01.62	TO	308+10.34	RURAL	808.72	3.00	269.57	3.00		40.44
OMISSION - P.E. #042									
308+42.92	TO	310+11.20	RURAL	168.28	3.00	56.09	3.00		8.41
STA. EQN. STA. 310+11.20 (BK) TO STA. 310+00.00 (AH)									
310+00.00	TO	313+98.55	RURAL	398.55	3.00	132.85	3.00		19.93
OMISSION - CR 2100 E									
314+53.23	TO	326+68.88	RURAL	1,215.65	3.00	405.22	3.00		60.78
OMISSION - MAILBOX TURNOUT #004									
327+09.34	TO	328+28.63	RURAL	119.29	3.00	39.76	3.00		5.96
OMISSION - P.E. #044									
329+71.03	TO	332+25.26	RURAL	254.23	3.00	84.74	3.00		12.71
OMISSION - P.E. #046									
332+91.69	TO	335+91.47	RURAL	299.78	3.00	99.93	3.00		14.99
OMISSION - P.E. #047									
336+37.97	TO	357+28.69	RURAL	2,090.72	3.00	696.91	3.00		104.54
OMISSION - MAILBOX TURNOUT #005									
357+69.51	TO	360+89.02	RURAL	319.51	3.00	106.50	3.00		15.98
OMISSION - P.E. #049									
361+68.61	TO	379+13.32	RURAL	1,744.71	3.00	581.57	3.00		87.24
OMISSION - P.E. #050									
379+51.62	TO	380+23.94	RURAL	72.32	3.00	24.11	3.00		3.62
OMISSION - P.E. #051									
380+59.02	TO	395+45.64	RURAL	1,486.62	3.00	495.54	3.00		74.33
OMISSION - P.E. #053									
395+97.83	TO	416+48.27	RURAL	2,050.44	3.00	683.48	3.00		102.52
OMISSION - N WEST ST									
417+44.37	TO	418+37.09	RURAL	92.72	3.00	30.91	3.00		4.64
OMISSION - C.E. #041									
418+89.49	TO	419+53.13	RURAL	63.64	3.00	21.21	3.00		3.18
OMISSION - C.E. #041									
420+07.91	TO	420+94.53	RURAL	86.62	3.00	28.87	3.00		4.33
							WB URBAN / RURAL TOTALS =	90.33	1,211.08
							ROUNDED WB URBAN / RURAL TOTALS =	91.00	1,212.00
							WB TOTALS =	1,303.00	
							URBAN / RURAL TOTALS =	160.00	2,484.00
							TOTALS =	2,644.00	

USER NAME = Tyler.Pierson	DESIGNED -	REVISED -
	DRAWN -	REVISED -
PLOT SCALE = 40.0000 ' / in.	CHECKED -	REVISED -
PLOT DATE = 1/26/2023	DATE -	REVISED -

STATE OF ILLINOIS
DEPARTMENT OF TRANSPORTATION

SCHEDULES OF QUANTITIES

SCALE: SHEET 10 OF SHEETS STA. TO STA.

F.A.P. RTE.	SECTION	COUNTY	TOTAL SHEETS	SHEET NO.
709	(113)RS-7	CHAMPAIGN	103	23
		CONTRACT NO. 70944		
		ILLINOIS FED. AID PROJECT		

MODEL: $MODELNAME
FILE NAME: pw:\\ildot-pw.bentley.com:PWIDOT\Documents\IDOT Offices\District 5\Projects\D570944\CADData\CADsheets\D570944-sht-Schedules.dgn

SCHEDULES OF QUANTITIES

EASTBOUND PIPE CULVERT & END SECTION SCHEDULE

STA	LOCATION	PROP. START STA	PROP. END STA	PROP. START OFFSET FT	PROP. END OFFSET FT	PIPE UPSTREAM ELEVATION FT	PIPE DOWNSTREAM ELEVATION FT	50105220 RURAL PIPE CULVERT REMOVAL FT	542D0220 RURAL PIPE CULVERT CLASS D TY 1, 15" FT	542D0223 RURAL PIPE CULVERT CLASS D TY 1, 18" FT	542D0229 RURAL PIPE CULVERT CLASS D TY 1, 24" FT	542D5470 RURAL PIPE CULVERT CLASS D TYPE 1 EQRS 15" FT	542D5473 RURAL PIPE CULVERT CLASS D TYPE 1 EQRS 18" FT	542D5479 RURAL PIPE CULVERT CLASS D TYPE 1 EQRS 24" FT	54260415 RURAL SLOPED METAL END SECTION STANDARD 542411, 15", 1:4 EACH	54260418 RURAL SLOPED METAL END SECTION STANDARD 542411, 18", 1:4 EACH	54260424 RURAL SLOPED METAL END SECTION STANDARD 542411, 24", 1:4 EACH	54260815 RURAL SLOPED METAL END SECTION STANDARD 542416, 15", 1:4 EACH	54260818 RURAL SLOPED METAL END SECTION STANDARD 542416, 18", 1:4 EACH	54260824 RURAL SLOPED METAL END SECTION STANDARD 542416, 24", 1:4 EACH
215+99.51	F.E. #014	215+88.64	216+09.65	32.30	32.26	714.39	714.41	18.05		21.00						2.00				
225+92.16	F.E. #015	225+83.02	226+06.03	29.99	30.10	715.77	715.81	25.12			23.00						2.00			
226+68.05	F.E. #016	226+54.48	226+82.52	30.13	30.15	715.91	715.97	24.56	28.00						2.00					
228+37.70	F.E. #017	228+12.96	228+52.96	27.85	29.13	717.02	717.38	35.81	40.00						2.00					
235+86.97	P.E. #009	235+73.99	235+99.99	27.03	25.30	719.15	719.20	0.00	26.00						2.00					
236+63.94	P.E. #011	236+52.57	236+72.47	26.08	28.04	719.09	719.05	19.99						20.00						2.00
239+01.59	P.E. #014	238+88.21	239+11.12	30.91	31.17	718.62	718.58	21.63			23.00						2.00			
241+01.81	P.E. #017	240+86.64	241+15.64	33.21	33.55	718.23	718.17	21.25	29.00						2.00					
243+00.15	P.E. #020	242+85.73	243+14.75	33.37	32.99	718.37	718.48	20.93	29.00						2.00					
244+60.25	P.E. #021 P.E. #023	244+46.06	245+00.05	31.21	30.50	719.06	719.29	44.19	54.00						2.00					
245+98.98	P.E. #024	245+77.54	246+15.54	29.46	28.96	719.62	719.78	39.01	38.00						2.00					
247+43.09	P.E. #025	247+29.66	247+57.66	28.59	28.75	720.22	720.29	28.00	28.00						2.00					
248+64.85	P.E. #026	248+53.83	248+78.84	29.20	29.70	720.55	720.61	25.11				25.00						2.00		
249+85.74	P.E. #027	249+71.32	249+99.32	30.21	30.52	720.74	720.77	24.44				28.00						2.00		
250+73.04	P.E. #028	250+61.92	250+82.93	30.49	30.47	721.06	721.10	20.37				21.00						2.00		
251+27.80	P.E. #029	251+16.26	251+47.26	30.92	31.87	721.08	720.93	28.51				31.00						2.00		
251+90.06	P.E. #030	251+76.58	252+35.73	32.63	31.61	720.78	720.62	55.96		59.00						2.00				
							EASTBOUND TOTALS =	452.93	272.00	80.00	46.00	105.00	0.00	20.00	16.00	4.00	4.00	8.00	0.00	2.00
							EASTBOUND ROUNDED TOTALS =	453.00	272.00	80.00	46.00	105.00	0.00	20.00	16.00	4.00	4.00	8.00	0.00	2.00

WESTBOUND PIPE CULVERT & END SECTION SCHEDULE

STA	LOCATION	PROP. START STA	PROP. END STA	PROP. START OFFSET FT	PROP. END OFFSET FT	PIPE UPSTREAM ELEVATION FT	PIPE DOWNSTREAM ELEVATION FT	50105220 RURAL PIPE CULVERT REMOVAL FT	542D0220 RURAL PIPE CULVERT CLASS D TY 1, 15" FT	542D0223 RURAL PIPE CULVERT CLASS D TY 1, 18" FT	542D0229 RURAL PIPE CULVERT CLASS D TY 1, 24" FT	542D5470 RURAL PIPE CULVERT CLASS D TYPE 1 EQRS 15" FT	542D5473 RURAL PIPE CULVERT CLASS D TYPE 1 EQRS 18" FT	542D5479 RURAL PIPE CULVERT CLASS D TYPE 1 EQRS 24" FT	54260415 RURAL SLOPED METAL END SECTION STANDARD 542411, 15", 1:4 EACH	54260418 RURAL SLOPED METAL END SECTION STANDARD 542411, 18", 1:4 EACH	54260424 RURAL SLOPED METAL END SECTION STANDARD 542411, 24", 1:4 EACH	54260815 RURAL SLOPED METAL END SECTION STANDARD 542416, 15", 1:4 EACH	54260818 RURAL SLOPED METAL END SECTION STANDARD 542416, 18", 1:4 EACH	54260824 RURAL SLOPED METAL END SECTION STANDARD 542416, 24", 1:4 EACH
211+58.08	P.E. #004	211+38.02	211+75.08	31.21	30.89	714.56	714.52	36.24			37.00						2.00			
213+61.87	C.E. #031	212+95.09	214+28.09	32.10	32.33	714.44	714.56	131.30			133.00						2.00			
220+74.10	C.E. #032	220+44.37	221+05.37	30.05	30.05	715.18	715.24	53.85	61.00						2.00					
221+69.51	C.E. #033	221+37.59	221+95.58	29.86	29.41	715.27	715.33	48.22	58.00						2.00					
224+53.94	C.E. #034	224+25.69	224+86.69	29.15	29.06	715.63	715.72	53.83		61.00						2.00				
225+71.44	C.E. #035	225+47.94	225+95.94	28.41	30.30	715.80	715.86	38.49	48.00						2.00					
226+58.39	C.E. #036	226+24.43	226+93.45	30.08	28.70	715.90	715.99	60.63	69.00						2.00					
228+58.94	C.E. #037	228+29.72	228+75.72	28.68	26.92	717.17	717.59	53.27			46.00						2.00			
230+59.12	C.E. #038	230+38.31	230+80.31	26.00	26.99	718.08	718.16	46.64					42.00						2.00	
231+67.73	P.E. #005	231+56.14	231+81.12	26.77	26.60	718.31	718.36	25.51						25.00						2.00
233+12.12	P.E. #006	232+93.03	233+26.05	27.26	28.24	718.59	718.65	32.37	33.00						2.00					
234+59.00	P.E. #007	234+47.07	234+71.07	27.37	27.41	718.89	718.94	26.42		24.00						2.00				
235+20.78	P.E. #008	235+07.37	235+31.34	26.77	27.49	719.02	719.06	22.62	24.00						2.00					
236+29.32	P.E. #010	236+15.21	236+38.22	27.22	25.28	719.18	719.14	26.28	23.00						2.00					
236+95.09	P.E. #012	236+81.05	237+09.96	25.56	28.56	719.07	719.03	28.23	29.00						2.00					
238+10.09	P.E. #013	237+97.18	238+23.18	28.20	29.00	718.89	718.85	26.03		26.00						2.00				
239+15.64	P.E. #015	238+98.91	239+30.91	28.93	29.41	718.73	718.68	24.97	32.00						2.00					
240+20.59	P.E. #016	240+04.27	240+37.20	29.59	29.16	718.56	718.51	27.56	33.00						2.00					
241+33.82	P.E. #018	241+18.42	241+51.45	30.48	30.73	718.38	718.33	26.28	33.00						2.00					
242+65.45	P.E. #019	242+47.60	242+82.60	29.57	28.78	718.43	718.57	29.49	35.00						2.00					
244+71.77	P.E. #022	244+52.74	244+87.98	28.28	28.39	719.22	719.36	26.78	35.00						2.00					
247+57.35	F.E. #018	247+42.15	247+73.15	27.89	27.88	720.34	720.44	28.60		31.00						2.00				
							WESTBOUND TOTALS =	873.61	513.00	142.00	216.00	0.00	42.00	25.00	26.00	8.00	6.00	0.00	2.00	2.00
							WESTBOUND ROUNDED TOTALS =	874.00	513.00	142.00	216.00	0.00	42.00	25.00	26.00	8.00	6.00	0.00	2.00	2.00
							TOTALS =	1,327.00	785.00	222.00	262.00	105.00	42.00	45.00	42.00	12.00	10.00	8.00	2.00	4.00

SCHEDULES OF QUANTITIES

CENTERLINE PAVEMENT MARKING SCHEDULE

STA	TO	STA	LENGTH FT	URBAN RURAL	LINE TYPE	DESCRIPTION	SKIP-DASH	SOLID	SOLID + SKIP-DASH	DOUBLE SOLID	TWO-WAY LEFT TURN LANE	70300100 SHORT TERM PAVEMENT MARKING NO. LINE	NO. APP.	FT	70300150 SHORT TERM PAVEMENT MARKING REMOVAL SQ FT	70300221 TEMPORARY PAVEMENT MARKING LINE - 4" - PAINT 78001110 PAINT PAVEMENT MARKING LINE - 4" YELLOW FT	WHITE FT	78000200 THERMOPLASTIC PAVEMENT MARKING LINE - 4" YELLOW FT	WHITE FT	78300202 PAVEMENT MARKING REMOVAL WATER BLAST SQ FT	78011025 GROOVING RECESSED PAVEMENT MARKING 5" FT
2362+00.00	TO	2362+31.75	31.75	URBAN	DOUBLE SOLID	EB LTL INSIDE				63.50		1.00	3.00	12.00	4.00			63.50		21.17	63.50
2362+00.00	TO	2362+31.75	31.75	URBAN	SOLID	EB LTL OUTSIDE		31.75				1.00	3.00	12.00	4.00				31.75	10.58	31.75
2362+00.00	TO	2362+31.75	31.75	URBAN	SKIP-DASH	EB CENTERLINE	10.00					1.00	3.00	12.00	4.00			10.00		3.33	10.00
2362+00.00	TO	2362+31.75	31.75	URBAN	SKIP-DASH	WB CENTERLINE	10.00					1.00	3.00	12.00	4.00			10.00		3.33	10.00
101+20.00	TO	109+96.46	876.46	URBAN	SKIP-DASH	EB CENTERLINE	220.00					1.00	3.00	264.00	88.00				220.00	73.33	220.00
STA. EQN. STA 109+96.46 (BK) = 110+00.00 (AH)																					
110+00.00	TO	137+36.00	2,736.00	URBAN	SKIP-DASH	EB CENTERLINE	690.00					1.00	3.00	816.00	272.00				690.00	230.00	690.00
101+20.00	TO	109+96.46	876.46	URBAN	SKIP-DASH	WB CENTERLINE	220.00					1.00	3.00	264.00	88.00				220.00	73.33	220.00
STA. EQN. STA 109+96.46 (BK) = 110+00.00 (AH)																					
110+00.00	TO	130+89.00	2,089.00	URBAN	SKIP-DASH	WB CENTERLINE	530.00					1.00	3.00	624.00	208.00				530.00	176.67	530.00
101+20.00	TO	102+18.00	98.00	URBAN	SOLID	WB LTL INSIDE		98.00				1.00	3.00	24.00	8.00				98.00	32.67	98.00
101+20.00	TO	103+10.00	190.00	URBAN	DOUBLE SOLID	WB LTL OUTSIDE				380.00		1.00	3.00	60.00	20.00			380.00		126.67	380.00
103+10.00	TO	107+90.00	480.00	URBAN	TWO-WAY LEFT TURN LANE	TWLTL					1,200.00	2.00	3.00	288.00	96.00			1,200.00		400.00	1,200.00
108+44.00	TO	109+96.46	152.46	URBAN	TWO-WAY LEFT TURN LANE	TWLTL					384.92	2.00	3.00	96.00	32.00			384.92		128.31	384.92
STA. EQN. STA 109+96.46 (BK) = 110+00.00 (AH)																					
110+00.00	TO	120+00.00	1,000.00	URBAN	TWO WAY LEFT TURN LANE	TWLTL					2,500.00	2.00	3.00	600.00	200.00			2,500.00		833.33	2,500.00
121+25.00	TO	128+00.00	675.00	URBAN	TWO-WAY LEFT TURN LANE	TWLTL					1,690.00	2.00	3.00	408.00	136.00			1,690.00		563.33	1,690.00
128+00.00	TO	132+50.00	450.00	URBAN	DOUBLE SOLID	EB MEDIAN				900.00		1.00	3.00	132.00	44.00			900.00		300.00	900.00
128+00.00	TO	132+50.00	450.00	URBAN	DOUBLE SOLID	WB MEDIAN				900.00		1.00	3.00	132.00	44.00			900.00		300.00	900.00
132+50.00	TO	133+30.00	80.00	URBAN	DOUBLE SOLID	MEDIAN				160.00		1.00	3.00	24.00	8.00			160.00		53.33	160.00
133+30.00	TO	141+00.00	770.00	URBAN	SOLID + SKIP-DASH	WB - NO PASSING ZONE			970.00			1.00	3.00	228.00	76.00	970.00				323.33	
141+00.00	TO	153+82.71	1,282.71	URBAN	SKIP-DASH	CENTERLINE	330.00					1.00	3.00	384.00	128.00	330.00				110.00	
153+82.71	TO	173+55.76	1,973.05	RURAL	SKIP-DASH	CENTERLINE	500.00					1.00	3.00	588.00	196.00	500.00				166.67	
OMISSION - S.N. 010-0252																					
174+75.52	TO	190+00.00	1,524.48	RURAL	SKIP-DASH	CENTERLINE	390.00					1.00	3.00	456.00	152.00	390.00				130.00	
STA. EQN. STA 190+00.00 (BK) = 189+95.90 (AH)																					
189+95.90	TO	252+73.81	6,277.91	RURAL	SKIP-DASH	CENTERLINE	1,570.00					1.00	3.00	1,884.00	628.00	1,570.00				523.33	
OMISSION - S.N. 010-2019																					
253+59.71	TO	288+00.00	3,440.29	RURAL	SKIP-DASH	CENTERLINE	870.00					1.00	3.00	1,032.00	344.00	870.00				290.00	
STA. EQN. STA 288+00.00 (BK) = 288+11.50 (AH)																					
288+11.50	TO	310+11.20	2,199.70	RURAL	SKIP-DASH	CENTERLINE	550.00					1.00	3.00	660.00	220.00	550.00				183.33	
STA. EQN. STA 310+11.20 (BK) = 310+00.00 (AH)																					
310+00.00	TO	319+00.00	900.00	RURAL	SKIP-DASH	CENTERLINE	230.00					1.00	3.00	276.00	92.00	230.00				76.67	
319+00.00	TO	329+00.00	1,000.00	RURAL	SOLID + SKIP-DASH	EB - NO PASSING ZONE			1,250.00			1.00	3.00	300.00	100.00	1,250.00				416.67	
329+00.00	TO	340+00.00	1,100.00	RURAL	SOLID + SKIP-DASH	WB - NO PASSING ZONE			1,380.00			1.00	3.00	336.00	112.00	1,380.00				460.00	
340+00.00	TO	351+00.00	1,100.00	RURAL	SKIP-DASH	CENTERLINE	280.00					1.00	3.00	336.00	112.00	280.00				93.33	
351+00.00	TO	360+50.00	950.00	RURAL	SOLID + SKIP-DASH	EB - NO PASSING ZONE			1,190.00			1.00	3.00	288.00	96.00	1,190.00				396.67	
360+50.00	TO	371+00.00	1,050.00	RURAL	SOLID + SKIP-DASH	WB - NO PASSING ZONE			1,320.00			1.00	3.00	312.00	104.00	1,320.00				440.00	
371+00.00	TO	389+00.00	1,800.00	RURAL	SKIP-DASH	CENTERLINE	450.00					1.00	3.00	540.00	180.00	450.00				150.00	
389+00.00	TO	395+00.00	600.00	RURAL	SOLID + SKIP-DASH	EB - NO PASSING ZONE			750.00			1.00	3.00	180.00	60.00	750.00				250.00	
395+00.00	TO	406+00.00	1,100.00	RURAL	SOLID + SKIP-DASH	WB - NO PASSING ZONE			1,380.00			1.00	3.00	336.00	112.00	1,380.00				460.00	
406+00.00	TO	423+00.00	1,700.00	RURAL	SKIP-DASH	CENTERLINE	430.00					1.00	3.00	516.00	172.00	430.00				143.33	
											COLOR TOTALS =		-		-	13,840.00		8,199.00	1,790.00	-	-
											RURAL TOTALS =			8,040.00	2,680.00		12,540.00			4,180.00	
											URBAN TOTALS =			4,392.00	1,464.00		1,300.00		9,989.00	3,763.00	9,989.00
											TOTALS =			12,432.00	4,144.00		13,840.00		9,989.00	7,943.00	9,989.00

70300221, 78000200, AND 78011025 QUANTITIES CONTINUE IN EDGE OF PAVEMENT MARKING SCHEDULES AND SIDEROAD PAVEMENT MARKING SCHEDULE

78001110 QUANTITIES CONTINUE IN EDGE OF PAVEMENT MARKING SCHEDULES

78300202 QUANTITIES CONTINUE IN EDGE OF PAVEMENT MARKING SCHEDULES, SIDEROAD PAVEMENT MARKING SCHEDULE, LEFT TURN ARROW SCHEDULE, 6" PAVEMENT MARKING SCHEDULE,12" PAVEMENT MARKING SCHEDULE, ISLAND PAVEMENT MARKING SCHEDULE, AND STOP BAR SCHEDULE

70300100 AND 70300150 QUANTITIES CONTINUE IN STOP BAR SCHEDULE, EDGE OF PAVEMENT MARKING SCHEDULES, AND SIDEROAD PAVEMENT MARKING SCHEDULE

SCHEDULES OF QUANTITIES

EASTBOUND EDGE OF PAVEMENT MARKING SCHEDULE

STA	TO	STA	LENGTH FT	URBAN RURAL	HMA SHOULDER WIDTH FT	70300100 SHORT TERM PAVEMENT MARKING NO. APP.	70300100 SHORT TERM PAVEMENT MARKING FT	70300150 SHORT TERM PAVEMENT MARKING REMOVAL SQ FT	70300221 TEMPORARY PAVEMENT MARKING LINE 4" PAINT FT	78001110 PAINT PAVEMENT MARKING LINE 4" FT	78000200 THERMOPLASTIC PAVEMENT MARKING LINE 4" FT	78300202 PAVEMENT MARKING REMOVAL WATER BLAST SQ FT	78011025 GROOVING RECESSED PAVEMENT MARKING 5" FT
139+80.02	TO	139+97.40	17.38	URBAN	3.00				17.38	17.38		5.79	
STA. EQN. STA. 139+97.40 (BK) = STA. 140+00.00 (AH)													
140+00.00	TO	147+97.00	797.00	URBAN	3.00				797.00	797.00		265.67	
147+97.00	TO	153+49.62	552.62	URBAN	5.00	3.00	72.00	24.00	552.62	552.62		184.21	
OMISSION - TOWNSHIP HIGHWAY 178E													
154+18.71	TO	173+56.11	1,937.40	RURAL	3.00				1,937.40	1,937.40		645.80	
OMISSION - S.N. 010-0252													
174+75.95	TO	190+00.00	1,524.05	RURAL	3.00				1,524.05	1,524.05		508.02	
STA. EQN. STA. 190+00.00 (BK) = STA. 189+95.90 (AH)													
189+95.90	TO	208+20.53	1,824.63	RURAL	3.00				1,824.63	1,824.63		608.21	
OMISSION - CR 1900 E													
208+87.38	TO	212+46.00	358.62	RURAL	3.00				358.62	358.62		119.54	
212+46.00	TO	212+78.00	32.00	RURAL	8.00	3.00	12.00	4.00	32.00	32.00		10.67	
212+78.00	TO	223+95.00	1,117.00	RURAL	3.00				1,117.00	1,117.00		372.33	
223+95.00	TO	252+74.04	2,879.04	RURAL	8.00	3.00	348.00	116.00	2,879.04	2,879.04		959.68	
OMISSION - S.N. 010-2019													
253+59.87	TO	260+86.61	726.74	RURAL	3.00				726.74	726.74		242.25	
OMISSION - CR 2000 E													
261+83.39	TO	286+54.00	2,470.61	RURAL	3.00				2,470.61	2,470.61		823.54	
286+54.00	TO	288+00.00	146.00	RURAL	8.00	3.00	24.00	8.00	146.00	146.00		48.67	
STA. EQN. STA. 288+00.00 (BK) = STA. 288+11.50 (AH)													
288+11.50	TO	293+52.00	540.50	RURAL	8.00	3.00	72.00	24.00	540.50	540.50		180.17	
293+52.00	TO	297+86.00	434.00	RURAL	3.00				434.00	434.00		144.67	
297+86.00	TO	301+71.00	385.00	RURAL	6.00	3.00	48.00	16.00	385.00	385.00		128.33	
301+71.00	TO	310+11.20	840.20	RURAL	3.00				840.20	840.20		280.07	
STA. EQN. STA. 310+11.20 (BK) = STA. 310+00.00 (AH)													
310+00.00	TO	314+50.73	450.73	RURAL	3.00				450.73	450.73		150.24	
OMISSION - CR 2100 E													
315+17.93	TO	367+42.07	5,224.14	RURAL	3.00				5,224.14	5,224.14		1,741.38	
OMISSION - CR 2200 E													
368+11.20	TO	413+18.47	4,507.27	RURAL	3.00				4,507.27	4,507.27		1,502.42	
OMISSION - EILER DR													
414+30.84	TO	416+63.95	233.11	RURAL	3.00				233.11	233.11		77.70	
OMISSION - N WEST ST													
417+29.25	TO	421+06.44	377.19	RURAL	3.00				377.19	377.19		125.73	
OMISSION - MAIN ST													
422+57.66	TO	423+00.00	42.34	RURAL	3.00				42.34	42.34		14.11	
EASTBOUND ROUNDED URBAN-TOTALS =							72.00	24.00	1,367.00	1,367.00		456.00	
EASTBOUND ROUNDED RURAL-TOTALS =							504.00	168.00	26,051.00	26,051.00		8,684.00	
EASTBOUND ROUNDED TOTALS =							576.00	192.00	27,418.00	27,418.00		9,140.00	

70300221, 78000200, AND 78011025 QUANTITIES CONTINUE IN EDGE OF PAVEMENT MARKING SCHEDULES AND SIDEROAD PAVEMENT MARKING SCHEDULE

78001110 QUANTITIES CONTINUE IN CENTERLINE PAVEMENT MARKING SCHEDULE

78300202 QUANTITIES CONTINUE IN CENTERLINE PAVEMENT MARKING SCHEDULE, SIDEROAD PAVEMENT MARKING SCHEDULE, LEFT TURN ARROW SCHEDULE, 6" PAVEMENT MARKING SCHEDULE,12" PAVEMENT MARKING SCHEDULE, ISLAND PAVEMENT MARKING SCHEDULE, AND STOP BAR SCHEDULE

70300100 AND 70300150 QUANTITIES CONTINUE IN STOP BAR SCHEDULE, CENTERLINE PAVEMENT MARKING SCHEDULE, AND SIDEROAD PAVEMENT MARKING SCHEDULE

SCHEDULES OF QUANTITIES

WESTBOUND EDGE OF PAVEMENT MARKING SCHEDULE

STA	TO	STA	LENGTH FT	URBAN RURAL	HMA SHOULDER WIDTH FT	70300100 SHORT TERM PAVEMENT MARKING NO. APP.	70300100 SHORT TERM PAVEMENT MARKING FT	70300150 SHORT TERM PAVEMENT MARKING REMOVAL SQ FT	70300220 TEMPORARY PAVEMENT MARKING LINE 4" PAINT FT	78001110 PAINT PAVEMENT MARKING LINE 4" FT	78000200 THERMOPLASTIC PAVEMENT MARKING LINE 4" FT	78300202 PAVEMENT MARKING REMOVAL WATER BLAST SQ FT	78011025 GROOVING RECESSED PAVEMENT MARKING 5" FT
131+10.14	TO	132+90.00	179.86	URBAN					179.86		179.86	59.95	179.86
132+90.00	TO	134+37.90	147.90	URBAN	3.00				147.90	147.90		49.30	
STA. EQN. STA. 134+37.90 (BK) = STA. 134+40.40 (AH)													
134+40.40	TO	139+97.40	557.00	URBAN	3.00				557.00	557.00		185.67	
STA. EQN. STA. 139+97.40 (BK) = STA. 140+00.00 (AH)													
140+00.00	TO	147+97.00	797.00	URBAN	3.00				797.00	797.00		265.67	
147+97.00	TO	153+53.49	556.49	URBAN	5.00	3.00	72.00	24.00	556.49	556.49		185.50	
OMISSION - TOWNSHIP HIGHWAY 178E													
154+35.52	TO	173+55.51	1,919.99	RURAL	3.00				1,919.99	1,919.99		640.00	
OMISSION - S.N. 010-0252													
174+76.29	TO	190+00.00	1,523.71	RURAL	3.00				1,523.71	1,523.71		507.90	
STA. EQN. STA. 190+00.00 (BK) = STA. 189+95.90 (AH)													
189+95.90	TO	207+29.66	1,733.76	RURAL	3.00				1,733.76	1,733.76		577.92	
OMISSION - CR 1900 E													
208+18.46	TO	212+46.00	427.54	RURAL	3.00				427.54	427.54		142.51	
212+46.00	TO	212+78.00	32.00	RURAL	8.00	3.00	12.00	4.00	32.00	32.00		10.67	
212+78.00	TO	252+73.60	3,995.60	RURAL	3.00				3,995.60	3,995.60		1,331.87	
OMISSION - S.N. 010-2019													
253+59.87	TO	259+94.05	634.18	RURAL	3.00				634.18	634.18		211.39	
OMISSION CR 2000 E													
260+81.89	TO	288+00.00	2,718.11	RURAL	3.00				2,718.11	2,718.11		906.04	
STA. EQN. STA. 288+00.00 (BK) = STA. 288+11.50 (AH)													
288+11.50	TO	297+86.00	974.50	RURAL	3.00				974.50	974.50		324.83	
297+86.00	TO	301+71.00	385.00	RURAL	4.00	3.00	48.00	16.00	385.00	385.00		128.33	
301+71.00	TO	310+11.20	840.20	RURAL	3.00				840.20	840.20		280.07	
STA. EQN. STA. 310+11.20 (BK) = STA. 310+00.00 (AH)													
310+00.00	TO	313+87.29	387.29	RURAL	3.00				387.29	387.29		129.10	
OMISSION - CR 2100 E													
314+67.10	TO	416+15.44	10,148.34	RURAL	3.00				10,148.34	10,148.34		3,382.78	
OMISSION - N WEST ST													
417+57.74	TO	420+87.48	329.74	RURAL	3.00				329.74	329.74		109.91	
OMISSION - MAIN STREET													
422+63.60	TO	423+00.00	36.40	RURAL	3.00				36.40	36.40		12.13	
WESTBOUND ROUNDED URBAN-TOTALS =							72.00	24.00	2,239.00	2,059.00	180.00	747.00	180.00
WESTBOUND ROUNDED RURAL-TOTALS =							60.00	20.00	26,087.00	26,087.00		8,696.00	
WESTBOUND ROUNDED TOTALS =							132.00	44.00	28,326.00	28,146.00	180.00	9,443.00	180.00
URBAN-TOTALS =							144.00	48.00	3,606.00	3,426.00	180.00	1,203.00	180.00
RURAL-TOTALS =							564.00	188.00	52,138.00	52,138.00		17,380.00	
TOTALS =							708.00	236.00	55,744.00	55,564.00	180.00	18,583.00	180.00

70300221, 78000200, AND 78011025 QUANTITIES CONTINUE IN EDGE OF PAVEMENT MARKING SCHEDULES AND SIDEROAD PAVEMENT MARKING SCHEDULE

78001110 QUANTITIES CONTINUE IN CENTERLINE PAVEMENT MARKING SCHEDULE

78300202 QUANTITIES CONTINUE IN CENTERLINE PAVEMENT MARKING SCHEDULE, SIDEROAD PAVEMENT MARKING SCHEDULE, LEFT TURN ARROW SCHEDULE, 6" PAVEMENT MARKING SCHEDULE,12" PAVEMENT MARKING SCHEDULE, ISLAND PAVEMENT MARKING SCHEDULE, AND STOP BAR SCHEDULE

70300100 AND 70300150 QUANTITIES CONTINUE IN STOP BAR SCHEDULE, CENTERLINE PAVEMENT MARKING SCHEDULE, AND SIDEROAD PAVEMENT MARKING SCHEDULE

ISLAND PAVEMENT MARKING SCHEDULE

START STA	TO	END STA	NOTES	70300241 RURAL TEMPORARY PAVEMENT MARKING LINE 6" PAINT FT	78000400 RURAL THERMOPLASTIC PAVEMENT MARKING LINE 6" FT	70300261 RURAL TEMPORARY PAVEMENT MARKING LINE 12" PAINT FT	78000600 RURAL THERMOPLASTIC PAVEMENT MARKING LINE 12" FT	78300202 RURAL PAVEMENT MARKING REMOVAL WATER BLASTING SQ FT	78011035 RURAL GROOVING FOR RECESSED PAVEMENT MARKING 7" FT	78011065 RURAL GROOVING FOR RECESSED PAVEMENT MARKING 13" FT
421+25.37	TO	421+61.30	MAIN ST SB ISLAND	122.00	122.00	57.16	57.16	118.16	122.00	57.16
421+83.95	TO	422+24.04	MAIN ST NB ISLAND	137.76	137.76	72.41	72.41	141.29	137.76	72.41
TOTAL =				259.76	259.76	129.57	129.57	259.45	259.76	129.57
ROUNDED TOTAL =				260.00	260.00	130.00	130.00	260.00	260.00	130.00

70300241, 78000400, & 78011035 QUANTITIES CONTINUE IN 6" PAVEMENT MARKING SCHEDULE

70300261, 78000600, & 78011065 QUANTITIES CONTINUE IN 12" PAVEMENT MARKING SCHEDULE

78300202 QUANTITIES CONTINUE IN CENTERLINE PAVEMENT MARKING SCHEDULE, EDGE OF PAVEMENT MARKING SCHEDULES, SIDEROAD PAVEMENT MARKING SCHEDULE, LEFT TURN ARROW SCHEDULE, 6" PAVEMENT MARKING SCHEDULE, ISLAND PAVEMENT MARKING SCHEDULE, AND 12" PAVEMENT MARKING SCHEDULE

SCHEDULES OF QUANTITIES

SIDEROAD PAVEMENT MARKING SCHEDULE

SIDEROAD	*STA	TO	*STA	LENGTH FT	*START OFFSET FT	*END OFFSET FT	URBAN RURAL	COLOR	LINE TYPE	DESCRIPTION	SKIP-DASH	SOLID	DOUBLE SOLID	70300100 SHORT TERM PAVEMENT MARKING NO. LINE	NO. APP.	FT	70300150 SHORT TERM PAVEMENT MARKING REMOVAL SQ FT	70300221 TEMPORARY PAVEMENT MARKING LINE - 4" - PAINT 78000200 THERMOPLASTIC PAVEMENT MARKING LINE - 4" YELLOW	WHITE	78300202 PAVEMENT MARKING REMOVAL WATER BLAST SQ FT	78011025 GROOVING RECESSED PAVEMENT MARKING 5" FT
																		FT			
MAPLEWOOD DR	100+40.50	TO	100+40.50	24.50	-57.00	-81.50	URBAN	WHITE	SKIP-DASH	SB CENTERLINE	10.00			1.00	3.00	12.00	4.00		10.00	3.33	10.00
MAPLEWOOD DR	100+54.00	TO	100+54.00	24.50	-57.00	-81.50	URBAN	WHITE	SOLID	SB LTL OUTSIDE		24.50		1.00	3.00	12.00	4.00		24.50	8.17	24.50
MAPLEWOOD DR	100+66.00	TO	100+66.00	24.50	-57.00	-81.50	URBAN	YELLOW	DOUBLE SOLID	SB LTL INSIDE			49.00	1.00	3.00	12.00	4.00	49.00		16.33	49.00
MAPLEWOOD DR	100+79.50	TO	100+79.50	24.50	57.00	-81.50	URBAN	WHITE	SKIP-DASH	NB CENTERLINE	10.00			1.00	3.00	12.00	4.00		10.00	3.33	10.00
MAPLEWOOD DR	100+38.75	TO	100+38.75	17.00	61.00	78.00	URBAN	WHITE	SKIP-DASH	NB CENTERLINE	10.00			1.00	3.00	12.00	4.00		10.00	3.33	10.00
MAPLEWOOD DR	100+50.75	TO	100+50.75	17.00	61.00	78.00	URBAN	YELLOW	DOUBLE SOLID	NB LTL INSIDE			34.00	1.00	3.00	12.00	4.00	34.00		11.33	34.00
MAPLEWOOD DR	100+62.75	TO	100+62.75	17.00	61.00	78.00	URBAN	WHITE	SOLID	NB LTL OUTSIDE		17.00		1.00	3.00	12.00	4.00		17.00	5.67	17.00
MAPLEWOOD DR	100+76.75	TO	100+76.75	17.00	61.00	78.00	URBAN	WHITE	SKIP-DASH	NB CENTERLINE	10.00			1.00	3.00	12.00	4.00		10.00	3.33	10.00
LON DR	120+65.69	TO	120+65.77	19.00	-65.69	-65.77	URBAN	YELLOW	SKIP-DASH	CENTERLINE	10.00			1.00	3.00	12.00	4.00	10.00		3.33	10.00
LON DR	120+68.82	TO	120+67.54	8.00	51.60	59.60	URBAN	YELLOW	SKIP-DASH	CENTERLINE	10.00			1.00	3.00	12.00	4.00	10.00		3.33	10.00
													COLOR TOTALS =		-		-	103.00	82.00	-	-
													TOTALS =			120.00	40.00		185.00	61.48	184.50
													ROUNDED TOTALS =			120.00	40.00		185.00	62.00	185.00

*STATION AND OFFSET FROM FAP 709 (US 136)

70300221, 78000200, AND 78011025 QUANTITIES CONTINUE IN EDGE OF PAVEMENT MARKING SCHEDULES AND CENTERLINE PAVEMENT MARKING SCHEDULE

78300202 QUANTITIES CONTINUE IN CENTERLINE PAVEMENT MARKING SCHEDULE, EDGE OF PAVEMENT MARKING SCHEDULES, LEFT TURN ARROW SCHEDULE, 6" PAVEMENT MARKING SCHEDULE, 12" PAVEMENT MARKING SCHEDULE, ISLAND PAVEMENT MARKING SCHEDULE, AND STOP BAR SCHEDULE

70300100 AND 70300150 QUANTITIES CONTINUE IN EDGE OF PAVEMENT MARKING SCHEDULES, CENTERLINE PAVEMENT MARKING SCHEDULE, AND STOP BAR SCHEDULE

LEFT TURN ARROW SCHEDULE

STA	OFFSET FT	DESCRIPTION	70300211 TEMPORARY PAVEMENT MARKING LETTER & SYMBOL PAINT SQ FT	78000100 THERMOPLASTIC PAVEMENT MARKING LETTER & SYMBOL SQ FT	78011000 GROOVING RECESSED PAVEMENT MARKING LETTER & SYMBOL SQ FT	78300202 PAVEMENT MARKING REMOVAL WATER BLAST SQ FT
2362+13.75	2.11	US 136 EAST TO MAPLEWOOD DR	15.6	15.6	15.6	15.6
100+59.29	78.19	MAPLEWOOD DR SOUTH TO US 136	15.6	15.6	15.6	15.6
100+57.57	-75.19	MAPLEWOOD DR NORTH TO US 137	15.6	15.6	15.6	15.6
101+38.00	2.54	US 136 WEST TO MAPLEWOOD DR	15.6	15.6	15.6	15.6
102+18.00	2.53	US 136 WEST TO MAPLEWOOD DR	15.6	15.6	15.6	15.6
103+40.00	3.84	TWO-WAY LEFT TURN LANE	15.6	15.6	15.6	15.6
103+64.00	1.74	TWO-WAY LEFT TURN LANE	15.6	15.6	15.6	15.6
105+38.00	3.84	TWO-WAY LEFT TURN LANE	15.6	15.6	15.6	15.6
105+62.00	1.76	TWO-WAY LEFT TURN LANE	15.6	15.6	15.6	15.6
107+36.00	3.84	TWO-WAY LEFT TURN LANE	15.6	15.6	15.6	15.6
107+60.00	1.76	TWO-WAY LEFT TURN LANE	15.6	15.6	15.6	15.6
108+74.00	3.84	TWO-WAY LEFT TURN LANE	15.6	15.6	15.6	15.6
108+98.00	1.76	TWO-WAY LEFT TURN LANE	15.6	15.6	15.6	15.6
111+26.00	3.84	TWO-WAY LEFT TURN LANE	15.6	15.6	15.6	15.6
111+50.00	1.76	TWO-WAY LEFT TURN LANE	15.6	15.6	15.6	15.6
113+76.00	3.74	TWO-WAY LEFT TURN LANE	15.6	15.6	15.6	15.6
114+00.00	1.76	TWO-WAY LEFT TURN LANE	15.6	15.6	15.6	15.6
116+26.00	3.84	TWO-WAY LEFT TURN LANE	15.6	15.6	15.6	15.6
116+50.00	1.76	TWO-WAY LEFT TURN LANE	15.6	15.6	15.6	15.6
119+46.00	3.88	TWO-WAY LEFT TURN LANE	15.6	15.6	15.6	15.6
119+70.00	1.76	TWO-WAY LEFT TURN LANE	15.6	15.6	15.6	15.6
121+55.00	3.88	TWO-WAY LEFT TURN LANE	15.6	15.6	15.6	15.6
121+79.00	1.82	TWO-WAY LEFT TURN LANE	15.6	15.6	15.6	15.6
124+05.00	3.88	TWO-WAY LEFT TURN LANE	15.6	15.6	15.6	15.6
124+29.00	1.89	TWO-WAY LEFT TURN LANE	15.6	15.6	15.6	15.6
126+55.00	3.88	TWO-WAY LEFT TURN LANE	15.6	15.6	15.6	15.6
126+79.00	1.96	TWO-WAY LEFT TURN LANE	15.6	15.6	15.6	15.6
		TOTALS =	421.2	421.2	421.2	421.2
		ROUNDED TOTALS =	422.0	422.0	422.0	422.0

78300202 QUANTITIES CONTINUE IN CENTERLINE PAVEMENT MARKING SCHEDULE, EDGE OF PAVEMENT MARKING SCHEDULES, SIDEROAD PAVEMENT MARKING SCHEDULE, 6" PAVEMENT MARKING SCHEDULE, 12" PAVEMENT MARKING SCHEDULE, ISLAND PAVEMENT MARKING SCHEDULE, AND STOP BAR SCHEDULE

6" PAVEMENT MARKING SCHEDULE

START STA	TO	END STA	START OFFSET FT	END OFFSET FT	LENGTH FT	NOTES	70300241 URBAN TEMPORARY PAVEMENT MARKING LINE 6" PAINT FT	78000400 URBAN THERMOPLASTIC PAVEMENT MARKING LINE 6" FT	78300202 URBAN PAVEMENT MARKING REMOVAL WATER BLASTING SQ FT	78011035 URBAN GROOVING FOR RECESSED PAVEMENT MARKING 7" FT
100+01.28	TO	100+02.69	37.07	-35.25	72.33	WEST US 136 CROSSING	72.33	72.33	36 17	72.33
100+07.37	TO	100+08.64	38.89	-36.78	75.68		75.68	75.68	37 84	75.68
100+08.64	TO	101+02.54	-36.76	-43.19	94.12	NORTH MAPLEWOOD DR CROSSING	94.12	94.12	47 06	94.12
100+13.03	TO	101+01.05	-42.86	-47.92	88.17		88.17	88.17	44 08	88.17
100+07.37	TO	101+06.71	38.89	35.60	99.39	SOUTH MAPLEWOOD DR CROSSING	99.39	99.39	49.70	99.39
100+15.85	TO	101+05.84	44.32	41.31	90.04		90.04	90.04	45.02	90.04
101+06.71	TO	101+02.54	35.60	-43.19	78.90	EAST US 136 CROSSING	78.90	78.90	39.45	78.90
101+12.73	TO	101+08.41	35.69	-41.93	77.74		77.74	77.74	38.87	77.74
108+01.17	TO	108+32.94	-34.04	-34.05	31.77	NORTH BETHANY PARK DR CROSSING	31.77	31.77	15.89	31.77
108+03.47	TO	108+30.74	-40.04	-40.05	27.27		27.27	27.27	13 64	27.27
120+15.41	TO	120+15.84	27.66	-30.79	58.45	WEST US 136 CROSSING	58.45	58.45	29 23	58.45
120+22.40	TO	120+22.85	29.26	-32.40	61.66		61.66	61.66	30 83	61.66
120+22.85	TO	121+11.79	-32.40	-33.63	88.95	NORTH LON DR CROSSING	88.95	88.95	44 47	88.95
120+27.29	TO	121+04.17	-38.46	-39.52	76.89		76.89	76.89	38 44	76.89
120+42.49	TO	120+94.63	39.35	37.85	52.16	SOUTH LON DR CROSSING	52.16	52.16	26 08	52.16
120+47.58	TO	120+87.56	46.20	45.06	40.00		40.00	40.00	20 00	40.00
						TOTAL =	1,113.52	1,113.52	556 76	1,113.52
						ROUNDED TOTAL =	1,114.00	1,114.00	557.00	1,114.00

78300202 QUANTITIES CONTINUE IN CENTERLINE PAVEMENT MARKING SCHEDULE, EDGE OF PAVEMENT MARKING SCHEDULES, SIDEROAD PAVEMENT MARKING SCHEDULE, LEFT TURN ARROW SCHEDULE, 12" PAVEMENT MARKING SCHEDULE, ISLAND PAVEMENT MARKING SCHEDULE, AND STOP BAR SCHEDULE

70300241, 78000400, & 78011035 QUANTITIES CONTINUE IN ISLAND PAVEMENT MARKING SCHEDULE

SCHEDULES OF QUANTITIES

STOP BAR SCHEDULE

START STA	TO	END STA	START OFFSET FT	END OFFSET FT	LENGTH FT	URBAN RURAL	70300100 SHORT TERM MARKING FT	70300150 SHORT TERM MARKING REMOVAL SQ FT	70300281 TEMPORARY PAVEMENT MARKING LINE 24" PAINT FT	78000650 THERMOPLASTIC PAVEMENT MARKING LINE 24" FT	78300202 PAVEMENT MARKING REMOVAL WATER BLASTING SQ FT	78011125 GROOVING FOR RECESSED PAVEMENT MARKING 25" FT
2362+32.75	TO	2362+32.76	33.39	-6.35	39.74	URBAN	39.74	79.48	39.74	39.74	79.48	39.74
100+21.12	TO	100+65.95	-56.19	-56.19	44.83	URBAN	44.83	89.66	44.83	44.83	89.66	44.83
100+50.75	TO	100+95.70	60.02	60.02	44.95	URBAN	44.95	89.90	44.95	44.95	89.90	44.95
101+18.78	TO	101+18.78	8.43	-37.73	46.16	URBAN	46.16	92.32	46.16	46.16	92.32	46.16
108+02.89	TO	108+17.15	-46.67	-45.52	14.31	URBAN	14.31	28.61	14.31	14.31	28.61	14.31
120+33.27	TO	120+65.69	-44.70	-45.62	32.43	URBAN	32.43	64.87	32.43	32.43	64.87	32.43
120+68.98	TO	120+83.47	50.57	52.88	14.67	URBAN	14.67	29.35	14.67	14.67	29.35	14.67
421+32.56	TO	421+47.95	-41.95	-28.83	20.22	RURAL	20.22	40.45	20.22	20.22	40.45	20.22
421+61.30	TO	421+73.30	30.50	30.50	12.00	RURAL	12.00	24.00	12.00	12.00	24.00	12.00
421+71.95	TO	421+83.95	29.40	29.60	12.00	RURAL	12.00	24.00	12.00	12.00	24.00	12.00
421+97.34	TO	422+13.59	29.83	43.74	21.39	RURAL	21.39	42.78	21.39	21.39	42.78	21.39
						URBAN ROUNDED TOTALS =	238.00	475.00	238.00	238.00	475.00	238.00
						RURAL ROUNDED TOTALS =	66.00	132.00	66.00	66.00	132.00	66.00
						TOTALS =	304.00	607.00	304.00	304.00	607.00	304.00

78300202 QUANTITIES CONTINUE IN CENTERLINE PAVEMENT MARKING SCHEDULE, EDGE OF PAVEMENT MARKING SCHEDULES, SIDEROAD PAVEMENT MARKING SCHEDULE, LEFT TURN ARROW SCHEDULE, 6" PAVEMENT MARKING SCHEDULE, ISLAND PAVEMENT MARKING SCHEDULE, AND 12" PAVEMENT MARKING SCHEDULE

70300100 AND 70300150 QUANTITIES CONTINUE IN EDGE OF PAVEMENT MARKING SCHEDULES, CENTERLINE PAVEMENT MARKING SCHEDULE, AND SIDEROAD PAVEMENT MARKING SCHEDULE

12" PAVEMENT MARKING SCHEDULE

STA	TO	STA	SPACING FT	70300261 TEMPORARY PAVEMENT MARKING LINE 12" PAINT FT	78000600 THERMOPLASTIC PAVEMENT MARKING LINE 12" FT	78300202 PAVEMENT MARKING REMOVAL WATER BLASTING SQ FT	78011065 GROOVING FOR RECESSED PAVEMENT MARKING 13" FT
127+94.00	TO	132+49.00	20.00	262.00	262.00	262.00	262.00
			TOTALS =	262.00	262.00	262.00	262.00

78300202 QUANTITIES CONTINUE IN CENTERLINE PAVEMENT MARKING SCHEDULE, EDGE OF PAVEMENT MARKING SCHEDULES, SIDEROAD PAVEMENT MARKING SCHEDULE, LEFT TURN ARROW SCHEDULE, 6" PAVEMENT MARKING SCHEDULE, ISLAND PAVEMENT MARKING SCHEDULE, AND STOP BAR SCHEDULE

70300261, 78000600, & 78011065 QUANTITIES CONTINUE IN ISLAND PAVEMENT MARKING SCHEDULE

RAISED REFLECTIVE PAVEMENT MARKER SCHEDULE

STA	TO	STA	LENGTH FT	SPACING FT	URBAN RURAL	DESCRIPTION	SINGLE DOUBLE	COLOR	78100100 RAISED REFLECTIVE PAVEMENT MARKER EACH URBAN	78100100 RAISED REFLECTIVE PAVEMENT MARKER EACH RURAL	78300200 RAISED REFLECTIVE PAVEMENT MARKER REMOVAL EACH URBAN	78300200 RAISED REFLECTIVE PAVEMENT MARKER REMOVAL EACH RURAL
2362+00.00	TO	2362+31.75	31.75	40.00	URBAN	EB - LTL OUTSIDE	SINGLE	ONE-WAY CRYSTAL	1.00	0.00	1.00	0.00
2362+00.00	TO	2362+31.75	31.75	40.00	URBAN	EB - LTL INSIDE	SINGLE	TWO-WAY AMBER	1.00	0.00	1.00	0.00
2362+00.00	TO	2362+31.75	31.75	40.00	URBAN	EB - CENTERLINE	SINGLE	ONE-WAY CRYSTAL	1.00	0.00	1.00	0.00
2362+00.00	TO	2362+31.75	31.75	40.00	URBAN	WB - CENTERLINE	SINGLE	ONE-WAY CRYSTAL	1.00	0.00	1.00	0.00
101+20.00	TO	109+96.46	876.46	40.00	URBAN	EB - CENTERLINE	SINGLE	ONE-WAY CRYSTAL	23.00	0.00	23.00	0.00
STA. EQN. STA. 109+96.46 (BK) = STA. 110+00.00 (AH)												
110+00.00	TO	137+50.00	2,750.00	40.00	URBAN	EB - CENTERLINE	SINGLE	ONE-WAY CRYSTAL	70.00	0.00	70.00	0.00
101+20.00	TO	109+96.46	876.46	40.00	URBAN	WB - CENTERLINE	SINGLE	ONE-WAY CRYSTAL	23.00	0.00	23.00	0.00
STA. EQN. STA. 109+96.46 (BK) = STA. 110+00.00 (AH)												
110+00.00	TO	130+89.00	2,089.00	40.00	URBAN	WB - CENTERLINE	SINGLE	ONE-WAY CRYSTAL	53.00	0.00	53.00	0.00
101+20.00	TO	102+18.00	98.00	40.00	URBAN	WB - LTL OUTSIDE	SINGLE	ONE-WAY CRYSTAL	3.00	0.00	3.00	0.00
101+20.00	TO	103+10.00	190.00	40.00	URBAN	WB - LTL INSIDE	SINGLE	TWO-WAY AMBER	6.00	0.00	6.00	0.00
103+10.00	TO	107+90.00	480.00	40.00	URBAN	TWLTL	DOUBLE	TWO-WAY AMBER	26.00	0.00	26.00	0.00
108+44.00	TO	109+96.46	152.46	40.00	URBAN	TWLTL	DOUBLE	TWO-WAY AMBER	10.00	0.00	10.00	0.00
STA. EQN. STA. 109+96.46 (BK) = STA. 110+00.00 (AH)												
110+00.00	TO	120+00.00	1,000.00	40.00	URBAN	TWLTL	DOUBLE	TWO-WAY AMBER	52.00	0.00	52.00	0.00
121+25.00	TO	132+50.00	1,125.00	40.00	URBAN	TWLTL	DOUBLE	TWO-WAY AMBER	58.00	0.00	58.00	0.00
132+50.00	TO	133+30.00	80.00	80.00	URBAN	MEDIAN TRANSITION	DOUBLE	TWO-WAY AMBER	6.00	0.00	6.00	0.00
133+30.00	TO	134+37.90	107.90	80.00	URBAN	CENTERLINE	SINGLE	TWO-WAY AMBER	2.00	0.00	2.00	0.00
STA. EQN. STA. 134+37.90 (BK) = STA. 134+40.40 (AH)												
134+40.40	TO	139+97.40	557.00	80.00	URBAN	CENTERLINE	SINGLE	TWO-WAY AMBER	7.00	0.00	7.00	0.00
STA. EQN. STA. 139+97.40 (BK) = STA. 140+00.00 (AH)												
140+00.00	TO	153+82.71	1,382.71	80.00	URBAN	CENTERLINE	SINGLE	TWO-WAY AMBER	17.00	0.00	17.00	0.00
URBAN / RURAL SPLIT												
153+82.71	TO	173+55.75	1,973.04	80.00	RURAL	CENTERLINE	SINGLE	TWO-WAY AMBER	0.00	25.00	0.00	25.00
OMISSION - S.N. 010-0252												
174+75.52	TO	190+00.00	1,524.48	80.00	RURAL	CENTERLINE	SINGLE	TWO-WAY AMBER	0.00	20.00	0.00	20.00
STA. EQN. STA. 190+00.00 (BK) = STA. 189+95.90 (AH)												
189+95.90	TO	252+73.82	6,277.92	80.00	RURAL	CENTERLINE	SINGLE	TWO-WAY AMBER	0.00	78.00	0.00	78.00
OMISSION - S.N. 010-2019												
253+59.71	TO	288+00.00	3,440.29	80.00	RURAL	CENTERLINE	SINGLE	TWO-WAY AMBER	0.00	44.00	0.00	44.00
STA. EQN. STA. 288+00.00 (BK) = STA. 288+11.50 (AH)												
288+11.50	TO	310+11.20	2,199.70	80.00	RURAL	CENTERLINE	SINGLE	TWO-WAY AMBER	0.00	27.00	0.00	27.00
STA. EQN. STA. 310+11.20 (BK) = STA. 310+00.00 (AH)												
310+00.00	TO	423+00.00	11,300.00	80.00	RURAL	CENTERLINE	SINGLE	TWO-WAY AMBER	0.00	141.00	0.00	141.00
								URBAN RURAL TOTAL =	360.00	335.00	360.00	335.00
								TOTAL =	695.00		695.00	

EB COLD MILLING (SPECIAL) SCHEDULE

STA	TO	STA	LENGTH FT	WIDTH FT	Z0010910 URBAN COLD MILLING (SPECIAL) SQ YD
101+19.06	TO	105+64.00	444.94	2.00	98.88
105+64.00	TO	109+96.46	432.46	1.00	48.05
STA. EQN. STA. 109+96.46 (BK) = STA. 110+00.00 (AH)					
110+00.00	TO	120+08.72	1,008.72	1.00	112.08
OMISSION - LON DRIVE					
121+27.29	TO	130+36.00	908.71	1.00	100.97
130+36.00	TO	134+37.90	401.90	2.00	89.31
STA. EQN. STA. 134+37.90 (BK) = STA. 134+40.40 (AH)					
134+40.40	TO	139+80.02	539.62	2.00	119.92
				EB TOTAL =	569.21
				EB ROUNDED TOTAL =	570.00

WB COLD MILLING (SPECIAL) SCHEDULE

STA	TO	STA	LENGTH FT	WIDTH FT	Z0010910 URBAN COLD MILLING (SPECIAL) SQ YD
101+25.42	TO	105+64.00	438.58	2.00	97.46
105+64.00	TO	109+96.46	432.46	1.00	48.05
STA. EQN. STA. 109+96.46 (BK) = STA. 110+00.00 (AH)					
110+00.00	TO	119+92.02	992.02	1.00	110.22
OMISSION - LON DRIVE					
121+25.04	TO	131+10.14	985.10	1.00	109.46
				WB TOTAL =	365.19
				WB ROUNDED TOTAL =	366.00
				TOTAL =	936.00

SCHEDULES OF QUANTITIES

EASTBOUND SHOULDER FOG SEAL SCHEDULE

STA	TO	STA	LENGTH FT	URBAN RURAL	START SHOULDER WIDTH FT	END SHOULDER WIDTH FT	AVERAGE SHOULDER WIDTH FT	SHOULDER AREA SQ FT	X0300010 BITUMINOUS MATERIALS, (FOG SEAL) POUND URBAN	X0300010 BITUMINOUS MATERIALS, (FOG SEAL) POUND RURAL
139+82.17	TO	139+97.40	15.23	URBAN	2.53	2.20	2.37	36.10	1.81	
STA. EQN. 139+97.40 (BK) = 140+00.00 (AH)										
140+00.00	TO	141+05.13	105.13	URBAN	2.20	3.38	2.79	293.31	14.67	
141+05.13	TO	141+15.06	9.93	URBAN	3.38	2.08	2.73	27.11	1.36	
141+15.06	TO	147+97.69	682.63	URBAN	2.08	1.99	2.04	1,392.57	69.63	
147+97.69	TO	153+49.62	551.93	URBAN	3.25	4.31	3.78	2,086.30	104.32	
OMISSION - TOWNSHIP HIGHWAY 178E										
154+10.07	TO	160+00.00	589.93	RURAL	2.36	2.03	2.20	1,297.85		64.89
160+00.00	TO	170+00.00	1,000.00	RURAL	2.03	2.40	2.22	2,220.00		111.00
170+00.00	TO	173+55.50	355.50	RURAL	2.40	1.16	1.78	632.79		31.64
OMISSION - S.N. 010-0252 E-E APPR.										
174+85.26	TO	175+82.73	97.47	RURAL	1.44	2.73	2.09	203.71		10.19
175+82.73	TO	180+00.00	417.27	RURAL	2.73	2.71	2.72	1,134.97		56.75
180+00.00	TO	190+00.00	1,000.00	RURAL	2.71	2.45	2.58	2,580.00		129.00
STA. EQN. 190+00.00 (BK) = 189+95.90 (AH)										
189+95.90	TO	200+00.00	1,004.10	RURAL	2.45	2.29	2.37	2,379.72		118.99
200+00.00	TO	208+26.37	826.37	RURAL	2.29	2.07	2.18	1,801.49		90.07
OMISSION - CR 1900 E										
208+81.41	TO	212+14.16	332.75	RURAL	2.22	2.22	2.22	738.71		36.94
212+14.16	TO	213+09.61	95.45	RURAL	5.13	5.40	5.27	503.02		25.15
213+09.61	TO	220+00.00	690.39	RURAL	2.53	2.71	2.62	1,808.82		90.44
220+00.00	TO	223+93.91	393.91	RURAL	2.71	2.48	2.60	1,024.17		51.21
223+93.91	TO	230+00.00	606.09	RURAL	6.18	6.59	6.39	3,872.92		193.65
230+00.00	TO	240+00.00	1,000.00	RURAL	6.59	6.87	6.73	6,730.00		336.50
240+00.00	TO	250+00.00	1,000.00	RURAL	6.87	6.41	6.64	6,640.00		332.00
250+00.00	TO	252+10.09	210.09	RURAL	6.41	7.55	6.98	1,466.43		73.32
252+10.09	TO	253+03.81	93.72	RURAL	7.55	3.51	5.53	518.27		25.91
OMISSION - S.N. 010-2019 E-E APPR.										
253+55.16	TO	260+91.00	735.84	RURAL	2.76	1.76	2.26	1,663.00		83.15
OMISSION - CR 2000 E										
261+75.70	TO	270+00.00	824.30	RURAL	2.15	2.28	2.22	1,829.95		91.50
270+00.00	TO	286+54.27	1,654.27	RURAL	2.28	1.78	2.03	3,358.17		167.91
286+54.27	TO	288+00.00	145.73	RURAL	5.88	6.04	5.96	868.55		43.43
STA. EQN. 288+00.00 (BK) = 288+11.50 (AH)										
288+11.50	TO	293+53.30	541.80	RURAL	6.04	6.75	6.40	3,467.52		173.38
293+53.30	TO	297+98.15	444.85	RURAL	1.94	2.01	1.98	880.80		44.04
293+53.30	TO	301+38.03	784.73	RURAL	5.04	6.38	5.71	4,480.81		224.04
301+38.03	TO	301+63.68	25.65	RURAL	6.38	2.01	4.20	107.73		5.39
301+63.68	TO	310+11.20	847.52	RURAL	2.01	2.08	2.05	1,737.42		86.87
STA. EQN. 310+11.20 (BK) = 310+00.00 (AH)										
310+00.00	TO	314+52.85	452.85	RURAL	2.08	1.72	1.90	860.41		43.02
OMISSION - CR 2100 E										
315+13.89	TO	320+00.00	486.11	RURAL	2.02	1.94	1.98	962.50		48.13
320+00.00	TO	330+00.00	1,000.00	RURAL	1.94	2.20	2.07	2,070.00		103.50
330+00.00	TO	340+00.00	1,000.00	RURAL	2.20	2.07	2.14	2,140.00		107.00
340+00.00	TO	350+00.00	1,000.00	RURAL	2.07	1.82	1.95	1,950.00		97.50
350+00.00	TO	360+00.00	1,000.00	RURAL	1.82	1.31	1.57	1,570.00		78.50
360+00.00	TO	370+00.00	1,000.00	RURAL	1.31	2.07	1.69	1,690.00		84.50
370+00.00	TO	380+00.00	1,000.00	RURAL	2.07	2.37	2.22	2,220.00		111.00
380+00.00	TO	390+00.00	1,000.00	RURAL	2.37	2.28	2.33	2,330.00		116.50
390+00.00	TO	400+00.00	1,000.00	RURAL	2.28	2.09	2.19	2,190.00		109.50
400+00.00	TO	410+00.00	1,000.00	RURAL	2.09	2.06	2.08	2,080.00		104.00
410+00.00	TO	413+24.83	324.83	RURAL	2.06	2.42	2.24	727.62		36.38
OMISSION - EILER DR										
414+26.41	TO	416+68.42	242.01	RURAL	2.66	2.42	2.54	614.71		30.74
OMISSION - EILER DR										
417+21.53	TO	421+00.05	378.52	RURAL	2.24	2.40	2.32	878.17		43.91
EASTBOUND URBAN / RURAL TOTALS =									191.79	3,811.54
EASTBOUND URBAN / RURAL ROUNDED TOTALS =									192.00	3,812.00
EASTBOUND TOTALS =									4,004.00	

WESTBOUND SHOULDER FOG SEAL SCHEDULE

STA	TO	STA	LENGTH FT	URBAN RURAL	START SHOULDER WIDTH FT	END SHOULDER WIDTH FT	AVERAGE SHOULDER WIDTH FT	SHOULDER AREA SQ FT	X0300010 BITUMINOUS MATERIALS, (FOG SEAL) POUND URBAN	X0300010 BITUMINOUS MATERIALS, (FOG SEAL) POUND RURAL
140+05.80	TO	147+87.07	781.27	URBAN	1.72	3.27	2.50	1,953.18	97.66	
147+87.07	TO	150+00.00	212.93	URBAN	4.13	5.00	4.57	973.09	48.65	
150+00.00	TO	153+54.39	354.39	URBAN	5.00	4.47	4.74	1,679.81	83.99	
OMISSION - TOWNSHIP HIGHWAY 178E										
154+28.48	TO	160+00.00	571.52	RURAL	1.81	2.17	1.99	1,137.32		56.87
160+00.00	TO	170+00.00	1,000.00	RURAL	2.17	2.15	2.16	2,160.00		108.00
170+00.00	TO	172+66.03	266.03	RURAL	2.15	2.54	2.35	625.17		31.26
OMISSION - S.N. 010-0252 E-E APPR.										
174+85.67	TO	175+81.98	96.31	RURAL	1.22	2.25	1.74	167.58		8.38
175+81.98	TO	180+00.00	418.02	RURAL	2.25	2.33	2.29	957.27		47.86
180+00.00	TO	190+00.00	1,000.00	RURAL	2.33	2.41	2.37	2,370.00		118.50
STA. EQN. 139+97.40 (BK) = 140+00.00 (AH)										
189+95.90	TO	200+00.00	1,004.10	RURAL	2.41	2.21	2.31	2,319.47		115.97
200+00.00	TO	207+34.48	734.48	RURAL	2.21	2.02	2.12	1,557.10		77.86
OMISSION - CR 1900E										
208+16.05	TO	210+00.00	183.95	RURAL	2.24	2.63	2.44	448.84		22.44
210+00.00	TO	220+00.00	1,000.00	RURAL	2.63	2.37	2.50	2,500.00		125.00
220+00.00	TO	230+00.00	1,000.00	RURAL	2.37	2.06	2.22	2,220.00		111.00
230+00.00	TO	240+00.00	1,000.00	RURAL	2.06	2.23	2.15	2,150.00		107.50
240+00.00	TO	250+00.00	1,000.00	RURAL	2.23	2.87	2.55	2,550.00		127.50
250+00.00	TO	252+76.30	276.30	RURAL	2.87	3.17	3.02	834.43		41.72
OMISSION - S.N. 010-2019 E-E APPR.										
253+30.88	TO	260+02.28	671.40	RURAL	3.21	2.61	2.91	1,953.77		97.69
OMISSION - CR 2000E										
260+77.75	TO	270+00.00	922.25	RURAL	1.69	2.58	2.14	1,973.62		98.68
270+00.00	TO	280+00.00	1,000.00	RURAL	2.58	2.49	2.54	2,540.00		127.00
280+00.00	TO	288+00.00	800.00	RURAL	2.49	2.20	2.35	1,880.00		94.00
STA. EQN. 288+00.00 (BK) = 288+11.50 (AH)										
288+11.50	TO	298+82.17	1,070.67	RURAL	2.20	2.87	2.54	2,719.50		135.98
298+82.17	TO	300+00.00	117.83	RURAL	5.61	3.76	4.69	552.62		27.63
300+00.00	TO	301+18.75	118.75	RURAL	3.76	6.89	5.33	632.94		31.65
301+18.75	TO	310+11.20	892.45	RURAL	1.94	2.25	2.10	1,874.15		93.71
STA. EQN. 31011.20 (BK) = 310+00.00 (AH)										
310+00.00	TO	313+92.86	392.86	RURAL	2.25	2.63	2.44	958.58		47.93
OMISSION - CR 2100E										
314+58.70	TO	320+00.00	541.30	RURAL	2.24	2.39	2.32	1,255.82		62.79
320+00.00	TO	330+00.00	1,000.00	RURAL	2.39	2.40	2.40	2,400.00		120.00
330+00.00	TO	340+00.00	1,000.00	RURAL	2.40	1.97	2.19	2,190.00		109.50
340+00.00	TO	350+00.00	1,000.00	RURAL	1.97	2.45	2.21	2,210.00		110.50
350+00.00	TO	360+00.00	1,000.00	RURAL	2.45	2.27	2.36	2,360.00		118.00
360+00.00	TO	370+00.00	1,000.00	RURAL	2.27	1.80	2.04	2,040.00		102.00
370+00.00	TO	380+00.00	1,000.00	RURAL	1.80	2.40	2.10	2,100.00		105.00
380+00.00	TO	390+00.00	1,000.00	RURAL	2.40	2.17	2.29	2,290.00		114.50
390+00.00	TO	400+00.00	1,000.00	RURAL	2.17	2.59	2.38	2,380.00		119.00
400+00.00	TO	410+00.00	1,000.00	RURAL	2.59	2.70	2.65	2,650.00		132.50
410+00.00	TO	416+15.59	615.59	RURAL	2.70	2.13	2.42	1,489.73		74.49
OMISSION - N WEST ST										
417+57.70	TO	420+81.56	323.86	RURAL	1.89	2.14	2.02	654.20		32.71
WESTBOUND URBAN / RURAL TOTALS =									230.30	3,055.12
WESTBOUND URBAN / RURAL ROUNDED TOTALS =									231.00	3,056.00
WESTBOUND TOTALS =									3,287.00	
URBAN / RURAL TOTALS =									423.00	6,868.00
TOTALS =									7,291.00	

MODEL: SMODELNAMES
FILE NAME: pw:\\ildot-pw.bentley.com:PWIDOT\Documents\IDOT Offices\District 5\Projects\D570944\CADData\CADsheets\D570944-sht-Schedules.dgn

USER NAME = Tyler.Pierson	DESIGNED -	REVISED -
	DRAWN -	REVISED -
PLOT SCALE = 40.0000 ' / in.	CHECKED -	REVISED -
PLOT DATE = 1/26/2023	DATE -	REVISED -

STATE OF ILLINOIS
DEPARTMENT OF TRANSPORTATION

SCHEDULES OF QUANTITIES

SCALE: | SHEET 17 OF SHEETS | STA. TO STA.

F.A.P. RTE.	SECTION	COUNTY	TOTAL SHEETS	SHEET NO.
709	(113)RS-7	CHAMPAIGN	103	30
		CONTRACT NO. 70944		
		ILLINOIS FED. AID PROJECT		

SCHEDULES OF QUANTITIES

SURVEY MARKER TYPE 2 (SPECIAL) SCHEDULE

PT #	NORTHING	EASTING	STATION	OFFSET	CODE	DESC	EXISTING	XZ193400 URBAN	XZ193400 RURAL
								SURVEY MARKER TYPE 2 (SPECIAL) EACH	
106	1,327,669.889	1,039,078.392	2362+39.04/100+00	0.00	832	STA EQ	MAG NAIL	1.00	
1	1,327,675.292	1,039,577.947	104+99.58	0.00	832	POT	PSM	1.00	
105	1,327,693.125	1,041,374.738	122+99.99	-1.47	820	PI	MAG NAIL	1.00	
2	1,327,691.103	1,042,499.257	134+24.51	0.00	820	PI	PSM	1.00	
50	1,327,689.481	1,043,858.411	147+88.76	1.44	820	PI	PSM	1.00	
51	1,327,795.778	1,050,060.588	209+87.74	0.00	820	PI	PSM		1.00
8	1,327,822.839	1,052,676.649	236+03.94	0.00	820	PI	PSM		1.00
52	1,327,850.810	1,054,958.380	258+85.84	0.00	820	PI	PSM		1.00
58	1,327,875.707	1,056,677.121	276+04.76	0.00	820	PI	PSM		1.00
53	1,327,882.851	1,057,287.012	282+14.70	0.00	820	PI	PSM		1.00
54	1,327,913.889	1,060,679.200	316+07.33	0.00	820	PI	PSM		1.00
55	1,327,958.982	1,065,390.978	363+19.32	0.00	820	PI	PSM		1.00
56	1,327,972.686	1,066,689.415	376+17.83	0.00	820	PI	PSM		1.00
57	1,327,989.212	1,068,953.196	398+81.68	0.00	820	PI	PSM		1.00
							URBAN / RURAL TOTAL =	5.00	9.00
							URBAN / RURAL TOTAL =	14.00	

SURVEY MARKER VAULT SCHEDULE

POINT #	NORTHING	EASTING	STATION	OFFSET	CODE	DESCRIPTION	EXISTING	Z0070202 URBAN	Z0070202 RURAL
								SURVEY MARKER VAULT EACH	
100	1,327,672.740	1,039,137.323	100+58.96	-2.21	200	SECTION CORNER	VAULT	1.00	
1558	1,327,702.070	1,044,449.895	153+80.36	-2.45	200	SECTION CORNER	PSM	1.00	
2306	1,327,749.982	1,047,198.821	181+29.70	-3.25	200	SECTION CORNER	MAG NAIL		1.00
2307	1,327,749.927	1,047,200.631	181+31.51	-3.16	200	SECTION CORNER	MAG NAIL		1.00
3614	1,327,799.283	1,049,935.674	208+62.90	-5.64	200	SECTION CORNER	MAG NAIL		1.00
10276	1,327,826.807	1,052,566.267	234+93.60	-5.11	201	QUARTER CORNER	MAG NAIL		1.00
11341	1,327,853.258	1,055,112.472	260+39.95	-0.22	200	SECTION CORNER	PSM		1.00
11366	1,327,854.485	1,055,211.507	261+39.00	-0.01	200	SECTION CORNER	MAG NAIL		1.00
4192	1,327,883.790	1,057,805.020	287+32.69	3.80	200	SECTION CORNER	MAG NAIL		1.00
5123	1,327,914.287	1,060,497.376	314+25.52	-2.06	200	SECTION CORNER	MAG NAIL		1.00
5125	1,327,914.889	1,060,563.426	314+91.57	-2.06	200	SECTION CORNER	MAG NAIL		1.00
5816	1,327,940.174	1,063,181.477	341+09.74	-2.34	201	QUARTER CORNER	MAG NAIL		1.00
5817	1,327,940.083	1,063,179.391	341+07.66	-2.27	201	QUARTER CORNER	MAG NAIL		1.00
6401	1,327,965.883	1,065,847.864	367+76.26	-2.08	200	SECTION CORNER	MAG NAIL		1.00
6402	1,327,965.629	1,065,860.967	367+89.36	-1.69	200	SECTION CORNER	MAG NAIL		1.00
							URBAN / RURAL TOTALS =	2.00	13.00
							TOTALS =	15.00	

EXISTING TYPICAL CROSS-SECTION 1

STATION	TO	STATION
2362+00.00		2362+39.04 (BK)
100+00.00 (AH)		100+59.00 2

STATION EQUATION:
STA. 2362+39.04 BK = STA. 100+00.00 AH

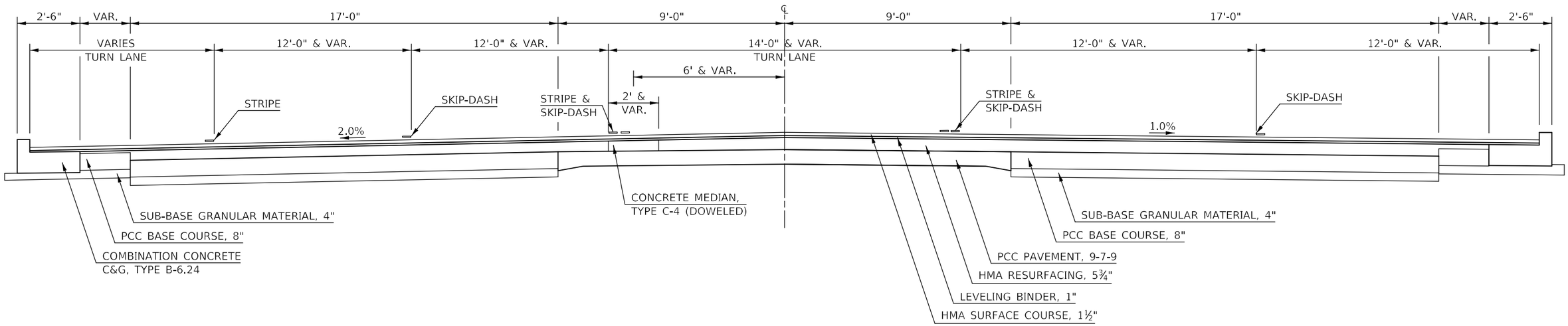

PROPOSED TYPICAL CROSS-SECTION 1

STATION	TO	STATION
2362+00.00		2362+39.04 (BK)
100+00.00 (AH)		100+59.00 2

STATION EQUATION:
STA. 2362+39.04 BK = STA. 100+00.00 AH

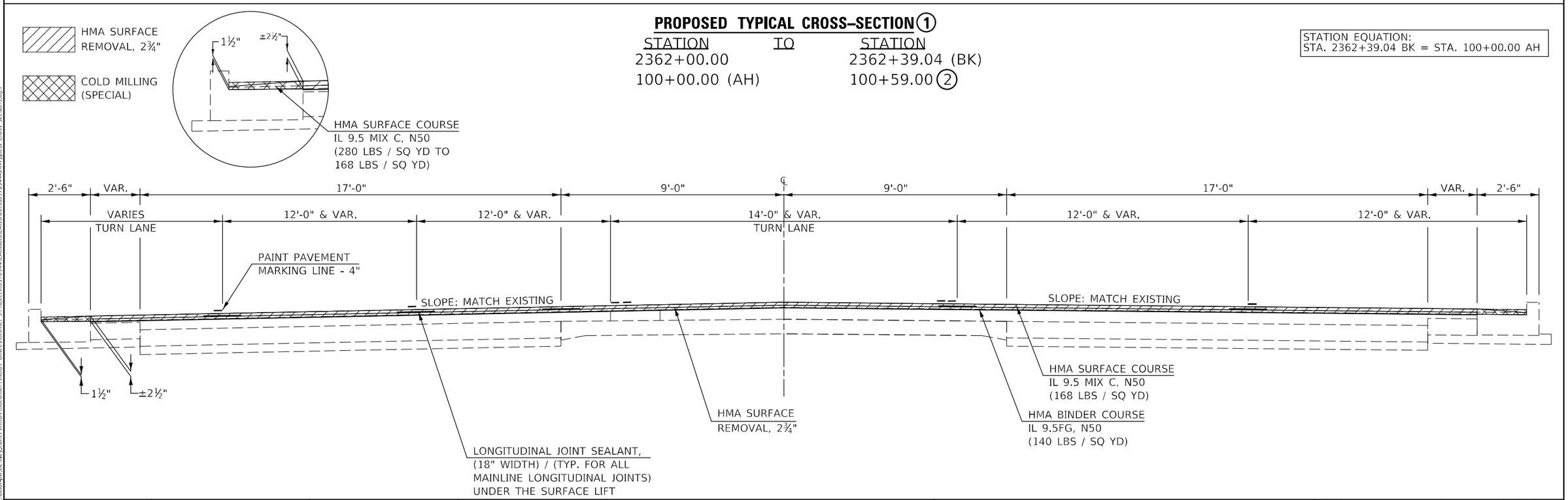

MODEL: $MODELNAME$
FILE NAME: pw:\\ildot-pw.bentley.com:PWIDOT\Documents\IDOT Offices\Districts 5\Project\D570944\CADData\CADsheets\D570944-sht-Typical Cross Sections.dgn

USER NAME = Tyler.Pierson	DESIGNED -	REVISED -	STATE OF ILLINOIS DEPARTMENT OF TRANSPORTATION
	DRAWN -	REVISED -	
PLOT SCALE = 4.0000 ' / in.	CHECKED -	REVISED -	
PLOT DATE = 1/26/2023	DATE -	REVISED -	

FAP 709 (US 136) TYPICAL CROSS-SECTIONS

SCALE: N.T.S. | SHEET 1 OF 12 SHEETS | STA. TO STA.

F.A.P. RTE.	SECTION	COUNTY	TOTAL SHEETS	SHEET NO.
709	(113)RS-7	CHAMPAIGN	103	32
		CONTRACT NO. 70944		
		ILLINOIS FED. AID PROJECT		

EXISTING TYPICAL CROSS-SECTION 2

STATION (1) 100+59.00 TO STATION 105+64.00 (3)

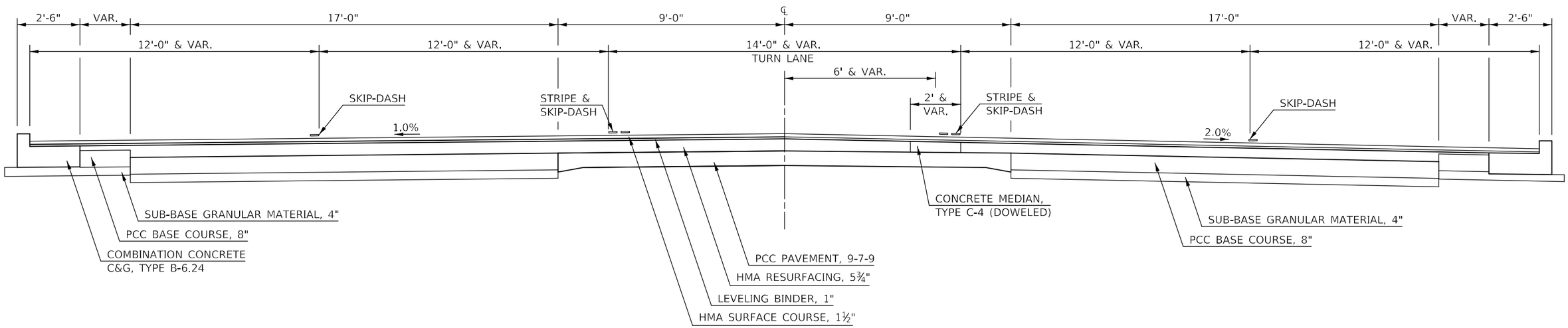

PROPOSED TYPICAL CROSS-SECTION 2

STATION (1) 100+59.00 TO STATION 105+64.00 (3)

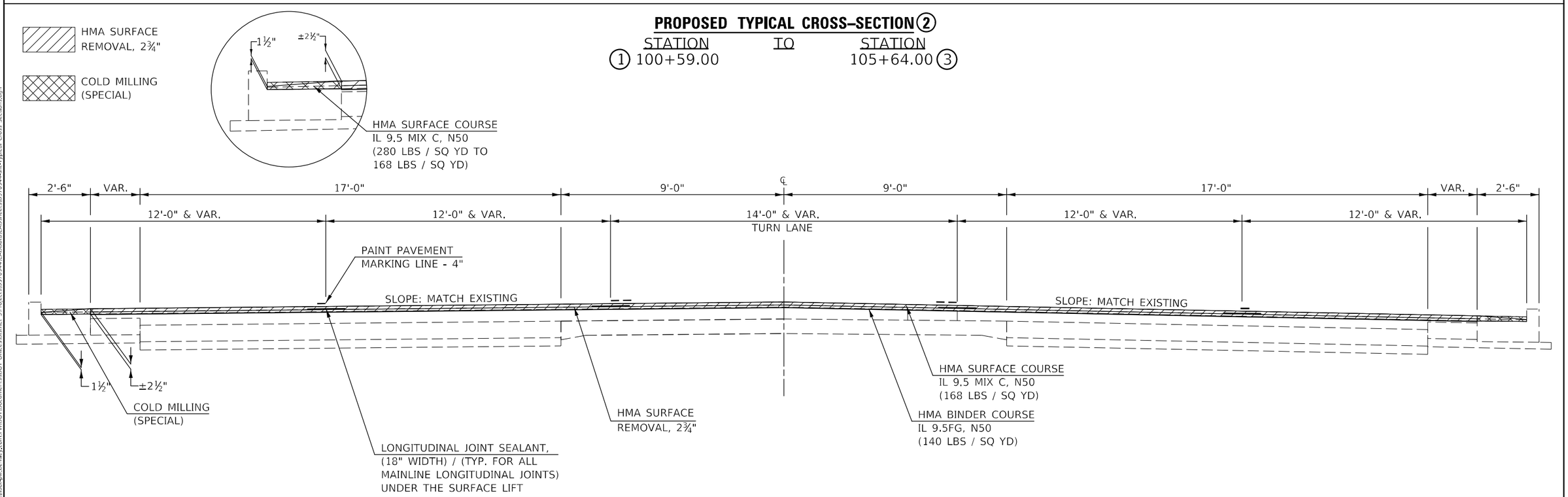

MODEL: $MODELNAME$
FILE NAME: pw:\\ildot-pw.bentley.com:PWIDOT\Documents\IDOT Offices\Districts 5\Project\D570944\CADData\CADsheets\D570944-sht-Typical Cross Sections.dgn

USER NAME = Tyler.Pierson	DESIGNED -	REVISED -
	DRAWN -	REVISED -
PLOT SCALE = 4.0000 ' / in.	CHECKED -	REVISED -
PLOT DATE = 1/26/2023	DATE -	REVISED -

STATE OF ILLINOIS
DEPARTMENT OF TRANSPORTATION

FAP 709 (US 136) TYPICAL CROSS-SECTIONS

SCALE: N.T.S. | SHEET 2 OF 12 SHEETS | STA. TO STA.

F.A.P. RTE.	SECTION	COUNTY	TOTAL SHEETS	SHEET NO.
709	(113)RS-7	CHAMPAIGN	103	33

CONTRACT NO. 70944

ILLINOIS | FED. AID PROJECT

EXISTING TYPICAL CROSS-SECTION 3

STATION	TO	STATION
2 105+64.00		109+96.46 (BK)
110+00.00 (AH)		130+36.50 4

STATION EQUATION:
STA. 109+96.46 BK = STA. 110+00.00 AH

* RT STA. 127+70.7 TO RT 130+36.5
COMBINATION C&G, TYPE B-6.24

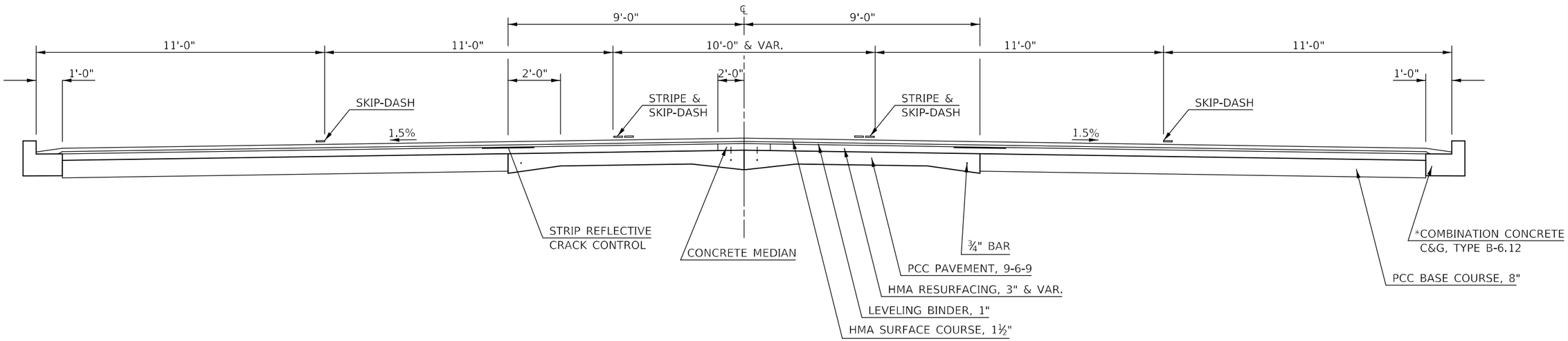

PROPOSED TYPICAL CROSS-SECTION 3

STATION	TO	STATION
2 105+64.00		109+96.46 (BK)
110+00.00 (AH)		130+36.50 4

STATION EQUATION:
STA. 109+96.46 BK = STA. 110+00.00 AH

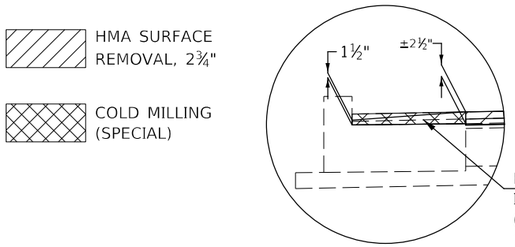

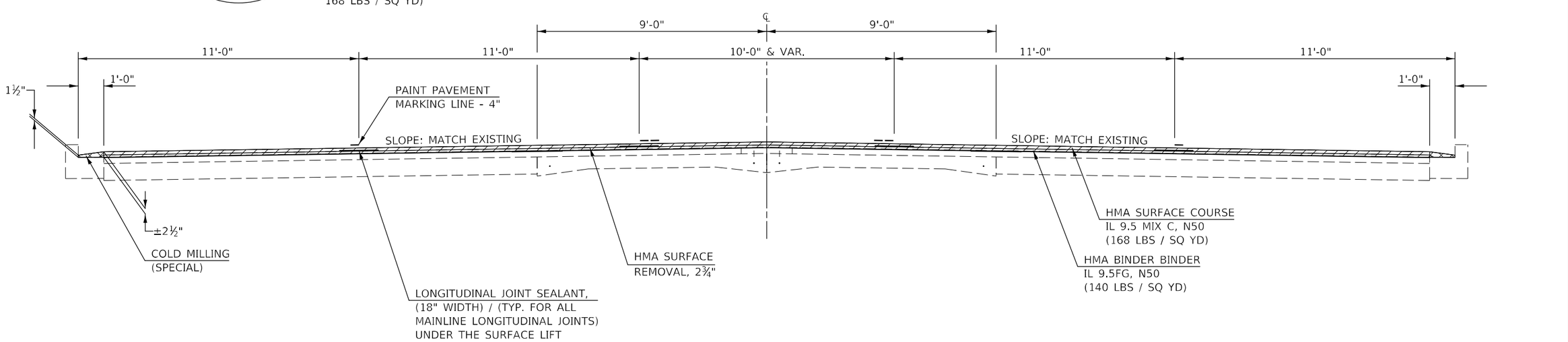

MODEL: $MODEL$NAME$
FILE NAME: pw:\\ildot-pw.bentley.com:PWIDOT\Documents\IDOT Offices\Districts 5\Project\D570944\CADData\CADsheets\D570944-sht-Typical Cross Sections.dgn

USER NAME = Tyler.Pierson	DESIGNED -	REVISED -	STATE OF ILLINOIS DEPARTMENT OF TRANSPORTATION
	DRAWN -	REVISED -	
PLOT SCALE = 4.0000 ' / in.	CHECKED -	REVISED -	
PLOT DATE = 1/26/2023	DATE -	REVISED -	

FAP 709 (US 136) TYPICAL CROSS-SECTIONS

SCALE: N.T.S. | SHEET 3 OF 12 SHEETS | STA. | TO STA.

F.A.P. RTE.	SECTION	COUNTY	TOTAL SHEETS	SHEET NO.
709	(113)RS-7	CHAMPAIGN	103	34
		CONTRACT NO. 70944		
		ILLINOIS FED. AID PROJECT		

EXISTING TYPICAL CROSS-SECTION 4

STATION	TO	STATION
3 130+36.50		134+37.90 (BK)
134+40.40 (AH)		139+81.50 5

STATION EQUATION:
STA. 139+97.40 BK = STA. 140+00.00 AH

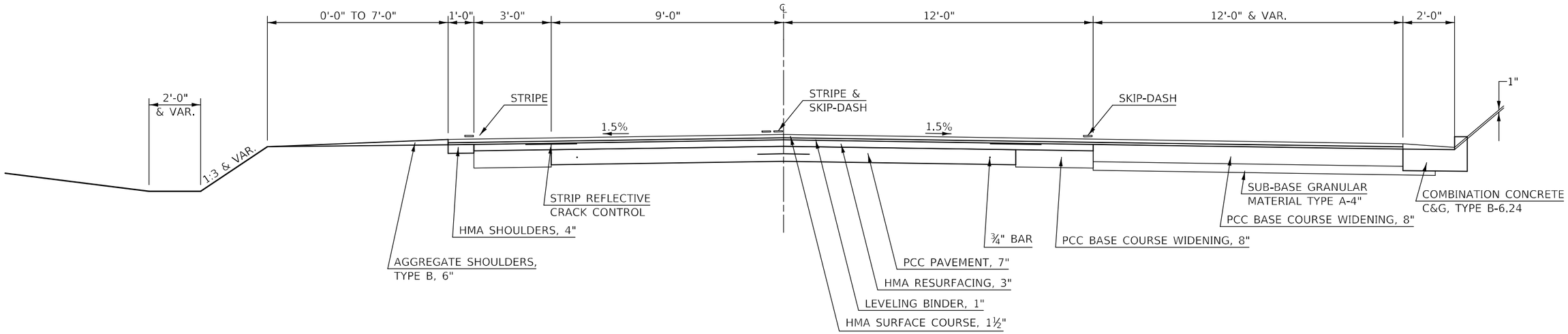

PROPOSED TYPICAL CROSS-SECTION 4

HMA SURFACE REMOVAL, 2¾"

COLD MILLING (SPECIAL)

STATION	TO	STATION
3 130+36.50		134+37.90 (BK)
134+40.40 (AH)		139+81.50 5

STATION EQUATION:
STA. 139+97.40 BK = STA. 140+00.00 AH

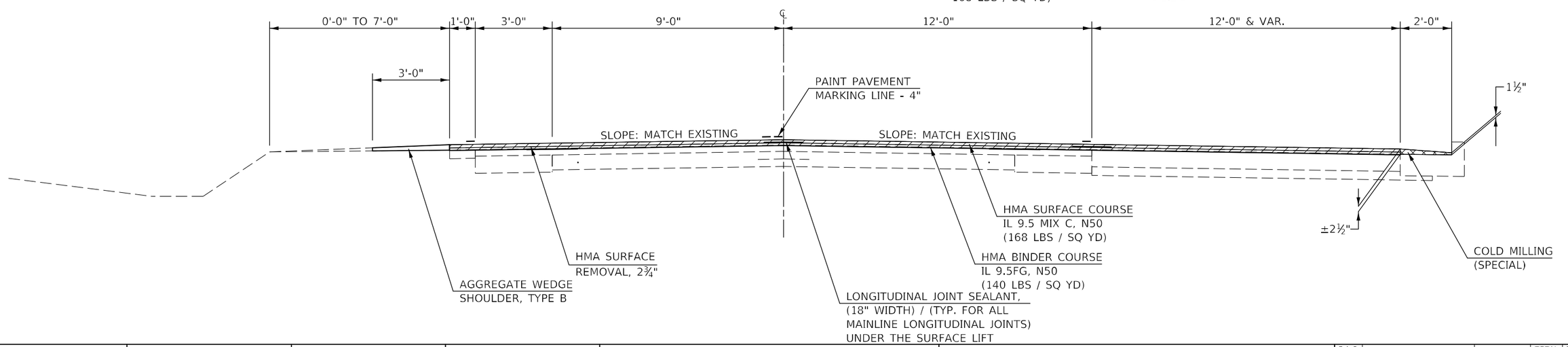

MODEL: $MODEL$NAME$
FILE NAME: pw:\\ildot-pw.bentley.com:PWIDOT\Documents\IDOT Offices\Districts 5\Projects\D570944\CADData\CADsheets\D570944-sht-Typical Cross Sections.dgn

USER NAME = Tyler.Pierson	DESIGNED -	REVISED -	STATE OF ILLINOIS DEPARTMENT OF TRANSPORTATION	FAP 709 (US 136) TYPICAL CROSS-SECTIONS	F.A.P. RTE.	SECTION	COUNTY	TOTAL SHEETS	SHEET NO.
	DRAWN -	REVISED -			709	(113)RS-7	CHAMPAIGN	103	35
PLOT SCALE = 4.0000 ' / in.	CHECKED -	REVISED -					CONTRACT NO. 70944		
PLOT DATE = 1/26/2023	DATE -	REVISED -		SCALE: N.T.S. SHEET 4 OF 12 SHEETS STA. TO STA.			ILLINOIS FED. AID PROJECT		

EXISTING TYPICAL CROSS-SECTION 5

STATION	TO	STATION
4 139+81.50		139+97.40 (BK)
140+00.00 (AH)		141+00.00 6

STATION EQUATION:
STA. 139+97.40 BK = STA. 140+00.00 AH

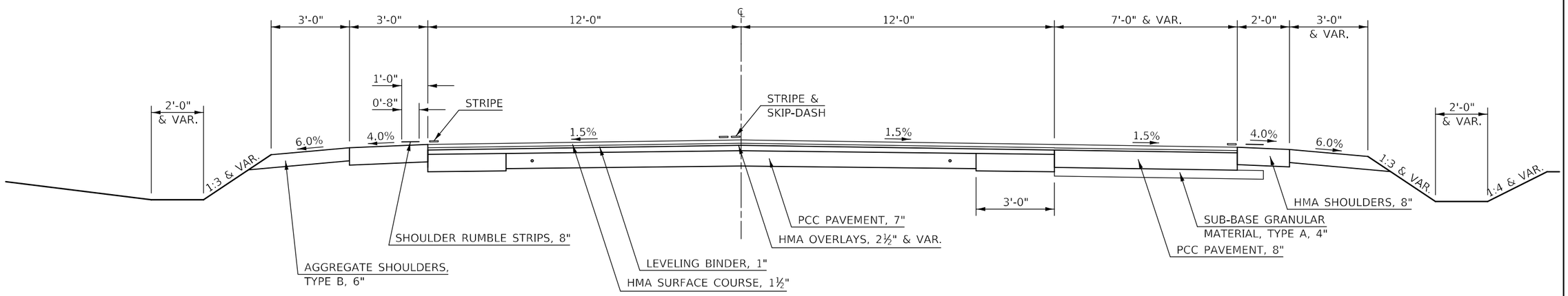

HMA SURFACE
REMOVAL, 2¾"

PROPOSED TYPICAL CROSS-SECTION 5

STATION	TO	STATION
4 139+81.50		139+97.40 (BK)
140+00.00 (AH)		141+00.00 6

STATION EQUATION:
STA. 139+97.40 BK = STA. 140+00.00 AH

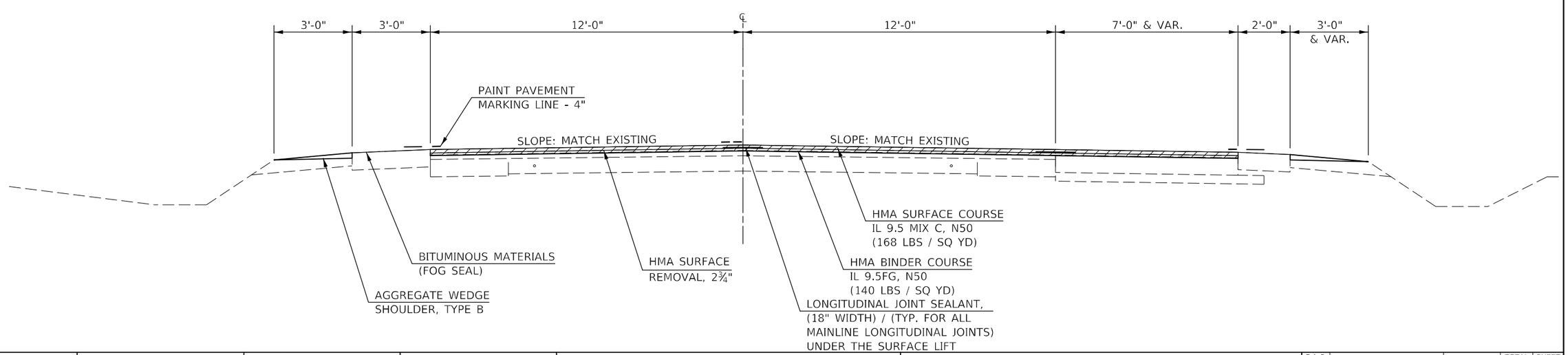

MODEL: $MODELNAME$
FILE NAME: pw:\\ildot-pw.bentley.com:PWIDOT\Documents\IDOT Offices\Districts 5\Projects\D570944\CADData\CADsheets\D570944-sht-Typical Cross Sections.dgn

USER NAME = Tyler.Pierson	DESIGNED -	REVISED -	STATE OF ILLINOIS DEPARTMENT OF TRANSPORTATION
	DRAWN -	REVISED -	
PLOT SCALE = 4.0000 ' / in.	CHECKED -	REVISED -	
PLOT DATE = 1/26/2023	DATE -	REVISED -	

FAP 709 (US 136) TYPICAL CROSS-SECTIONS

SCALE: N.T.S. | SHEET 5 OF 12 SHEETS | STA. TO STA.

F.A.P. RTE.	SECTION	COUNTY	TOTAL SHEETS	SHEET NO.
709	(113)RS-7	CHAMPAIGN	103	36
		CONTRACT NO. 70944		
		ILLINOIS FED. AID PROJECT		

STATION EQUATIONS:
STA. 190+00.00 BK = STA. 189+95.90 AH
STA. 288+00.00 BK = STA. 288+11.51 AH
STA. 310+11.20 BK = STA. 310+00.00 AH

EXISTING TYPICAL CROSS-SECTION 6

STATION	TO	STATION	STATION	TO	STATION
5 141+00.00		147+97.00 7	10 301+71.00		310+11.20 (BK)
7 153+58.00		190+00.00 (BK)			310+00.00 (AH)
189+95.90 (AH)		212+46.00 9	11 374+75.00		365+82.00 11
9 212+78.00		288+00.00 (BK)	11 396+13.00		379+65.00 11
288+11.51 (AH)		297+86.00 10	11 403.82.00		398+18.00 11
					423+00.00

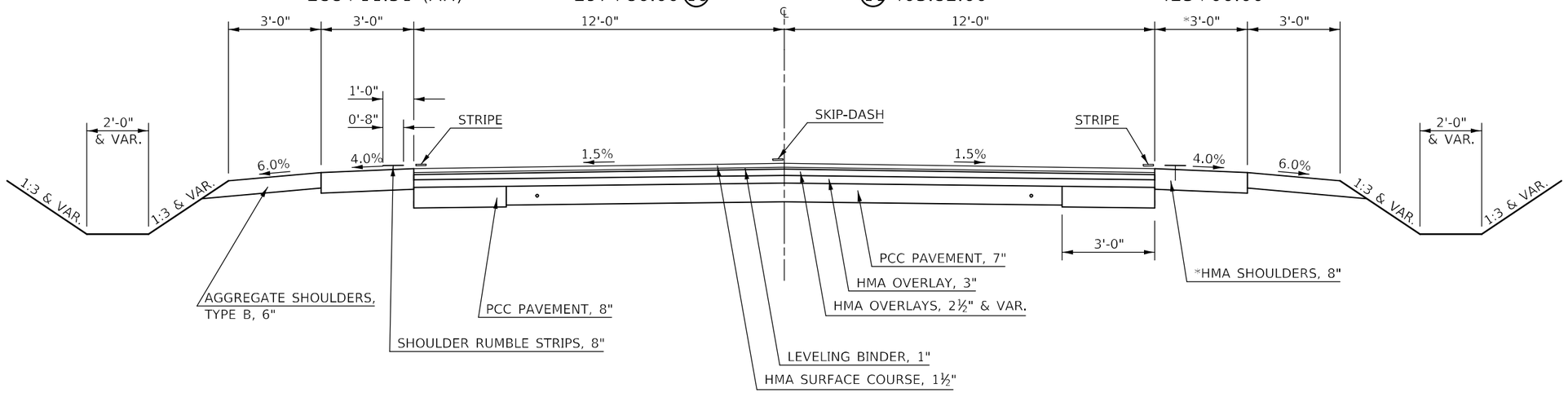

*RIGHT SHOULDER DETAIL

STA. 223+95.00 TO STA 242+00.00

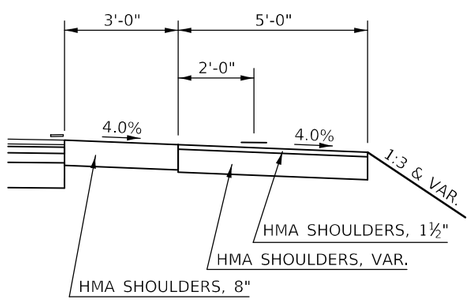

STA. 242+00.00 TO STA 254+14.00

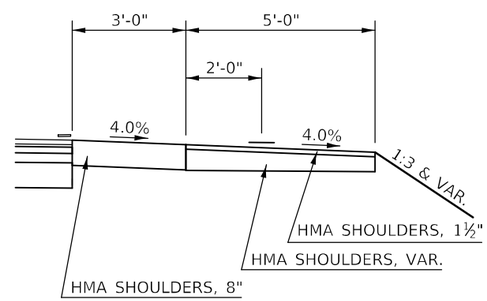

STA. 286+54.00 TO STA 293+52.00

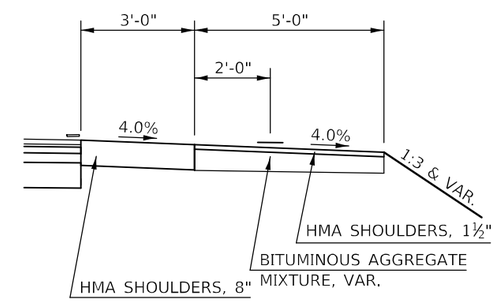

MODEL: $MODEL$NAME$
FILE NAME: pw:\\ildot-pw.bentley.com:PWIDOT\Documents\IDOT Offices\Districts 5\Project\D570944\CADData\CADsheets\D570944-sht-Typical Cross Sections.dgn

USER NAME = Tyler.Pierson	DESIGNED -	REVISED -	STATE OF ILLINOIS DEPARTMENT OF TRANSPORTATION
	DRAWN -	REVISED -	
PLOT SCALE = 4.0000 ' / in.	CHECKED -	REVISED -	
PLOT DATE = 1/26/2023	DATE -	REVISED -	

FAP 709 (US 136) TYPICAL CROSS-SECTIONS

SCALE: N.T.S. | SHEET 6 OF 12 SHEETS | STA. TO STA.

F.A.P. RTE.	SECTION	COUNTY	TOTAL SHEETS	SHEET NO.
709	(113)RS-7	CHAMPAIGN	103	37

CONTRACT NO. 70944

ILLINOIS FED. AID PROJECT

HMA SURFACE REMOVAL, 2¾"

STATION EQUATIONS:
STA. 190+00.00 BK = STA. 189+95.90 AH
STA. 288+00.00 BK = STA. 288+11.51 AH
STA. 310+11.20 BK = STA. 310+00.00 AH

PROPOSED TYPICAL CROSS-SECTION 6

STATION	TO	STATION	STATION	TO	STATION
5 141+00.00		147+97.00 7	10 301+71.00		310+11.20 (BK)
7 153+58.00		190+00.00 (BK)			310+00.00 (AH)
189+95.90 (AH)		212+46.00 9	11 374+75.00		365+82.00 11
9 212+78.00		288+00.00 (BK)	11 396+13.00		379+65.00 11
288+11.51 (AH)		297+86.00 10	11 403.82.00		398+18.00 11
					423+00.00

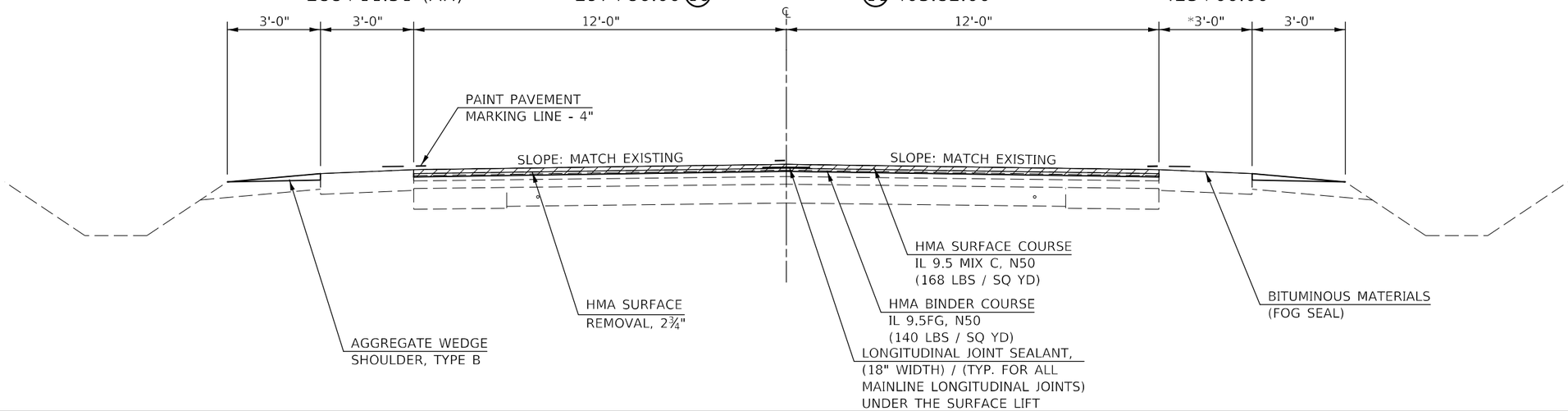

*RIGHT SHOULDER DETAIL

HMA SURFACE REMOVAL, 2¾"

STA. 223+95.00 TO STA 242+00.00

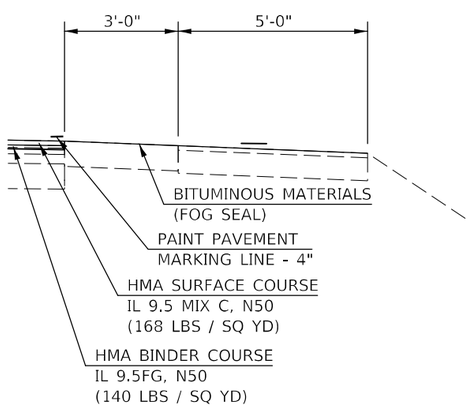

STA. 242+00.00 TO STA 254+14.00

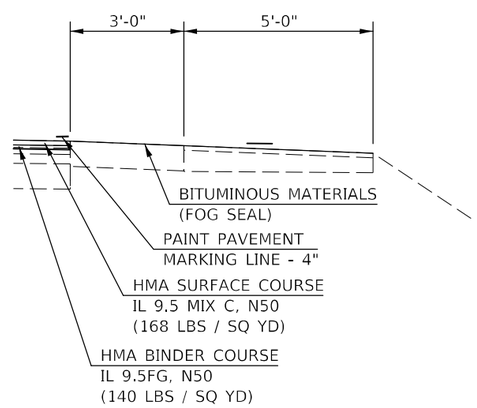

STA. 286+54.00 TO STA 293+52.00

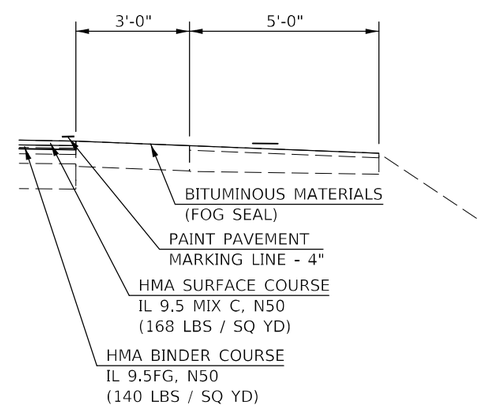

EXISTING TYPICAL CROSS-SECTION 7

STATION	TO	STATION
6 147+97.00		150+25.80 8
8 151+15.50		153+58.00 6

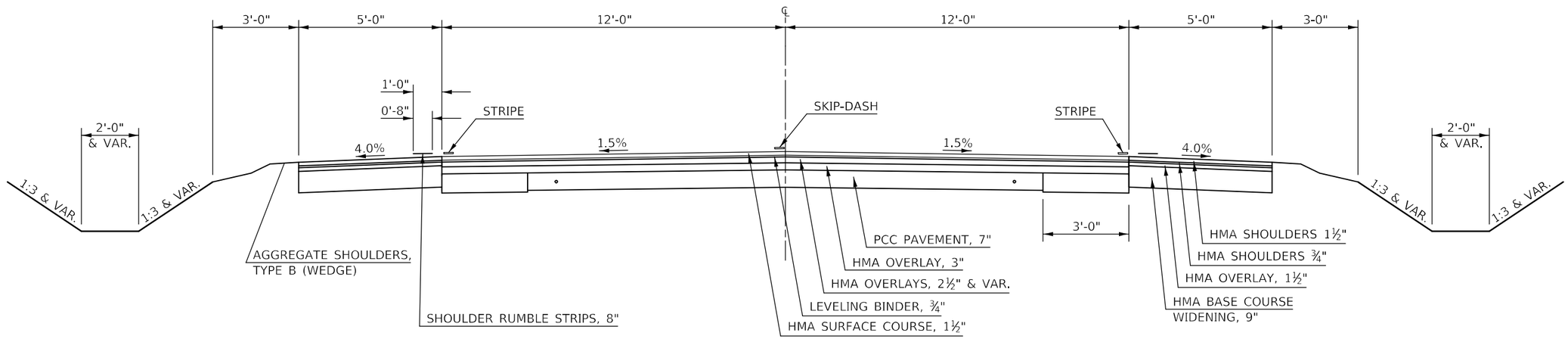

HMA SURFACE
REMOVAL, 2¾"

PROPOSED TYPICAL CROSS-SECTION 7

STATION	TO	STATION
6 147+97.00		150+25.80 8
8 151+15.50		153+58.00 6

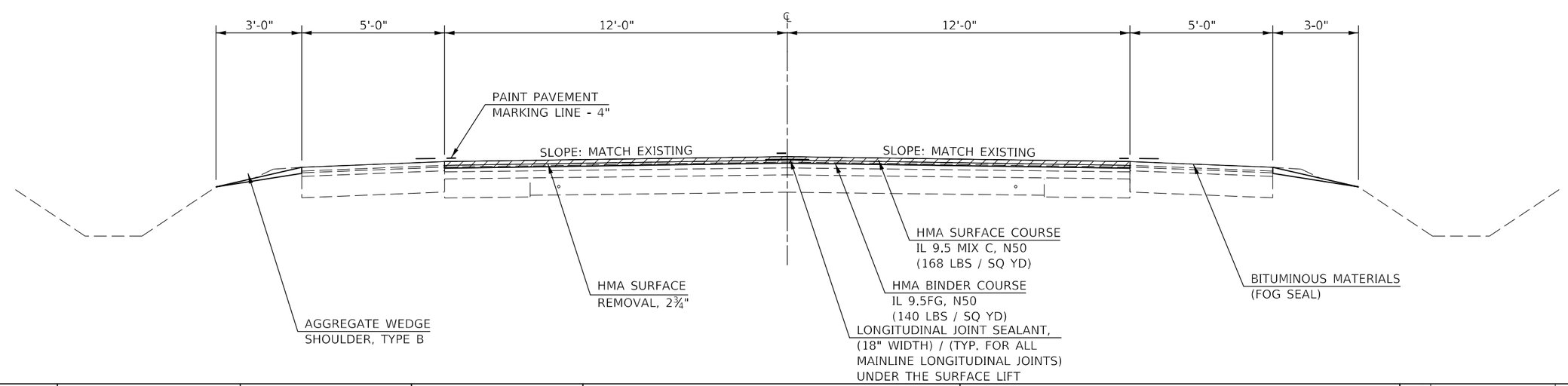

MODEL: $MODELNAME$
FILE NAME: pw:\\ildot-pw.bentley.com:PWIDOT\Documents\IDOT Offices\District 5\Project\D570944\CADData\CADsheets\D570944-sht-Typical Cross Sections.dgn

USER NAME = Tyler.Pierson	DESIGNED -	REVISED -	STATE OF ILLINOIS DEPARTMENT OF TRANSPORTATION
	DRAWN -	REVISED -	
PLOT SCALE = 4.0000 ' / in.	CHECKED -	REVISED -	
PLOT DATE = 1/26/2023	DATE -	REVISED -	

FAP 709 (US 136) TYPICAL CROSS-SECTIONS

SCALE: N.T.S. | SHEET 8 OF 12 SHEETS | STA. TO STA.

F.A.P. RTE.	SECTION	COUNTY	TOTAL SHEETS	SHEET NO.
709	(113)RS-7	CHAMPAIGN	103	39

CONTRACT NO. 70944

ILLINOIS | FED. AID PROJECT

EXISTING TYPICAL CROSS-SECTION 8

STATION TO STATION

7 150+25.80 151+15.50 7

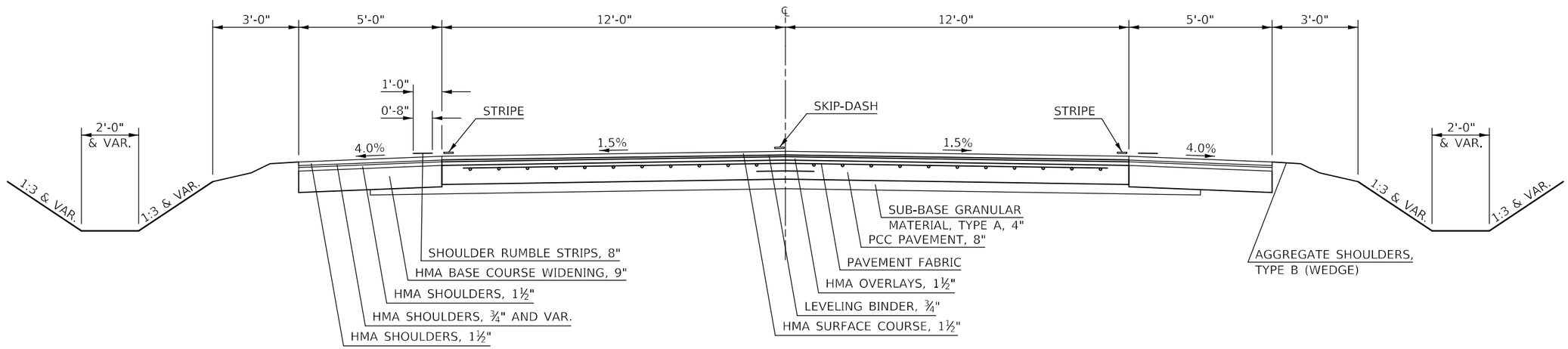

HMA SURFACE REMOVAL, 2¾"

PROPOSED TYPICAL CROSS-SECTION 8

STATION TO STATION

7 150+25.80 151+15.50 7

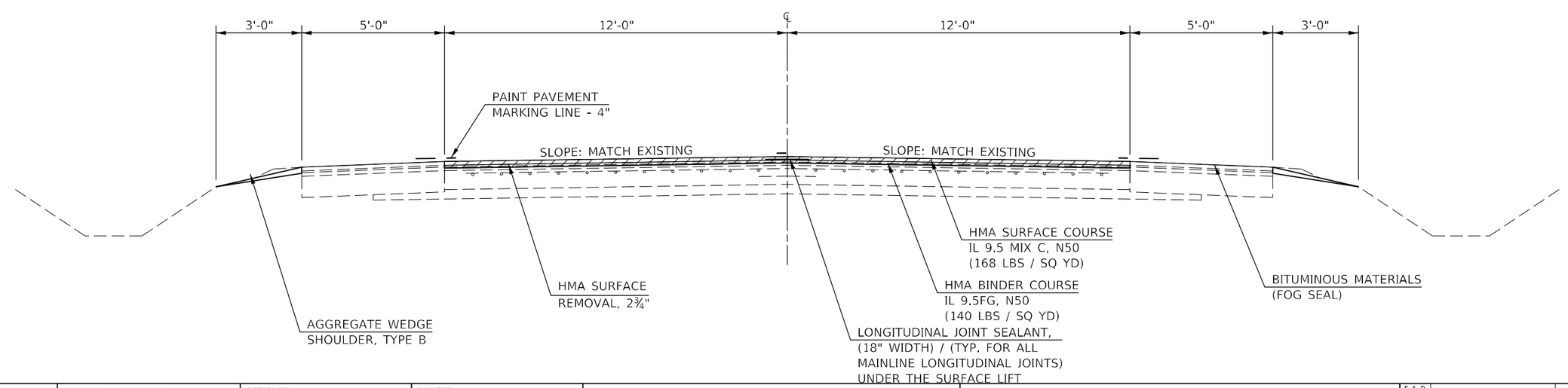

MODEL: $MODEL$NAME$
FILE NAME: pw:\\ildot-pw.bentley.com:PWIDOT\Documents\IDOT Offices\Districts 5\Project\D570944\CADData\CADsheets\D570944-sht-Typical Cross Sections.dgn

USER NAME = Tyler.Pierson	DESIGNED -	REVISED -	STATE OF ILLINOIS DEPARTMENT OF TRANSPORTATION	FAP 709 (US 136) TYPICAL CROSS-SECTIONS	F.A.P. RTE.	SECTION	COUNTY	TOTAL SHEETS / SHEET NO.
	DRAWN -	REVISED -			709	(113)RS-7	CHAMPAIGN	103 / 40
PLOT SCALE = 4.0000 ' / in.	CHECKED -	REVISED -					CONTRACT NO. 70944	
PLOT DATE = 1/26/2023	DATE -	REVISED -		SCALE: N.T.S. / SHEET 9 OF 12 SHEETS / STA. TO STA.		ILLINOIS	FED. AID PROJECT	

EXISTING TYPICAL CROSS-SECTION 9

STATION TO STATION

6 212+46.00 212+78.00 6

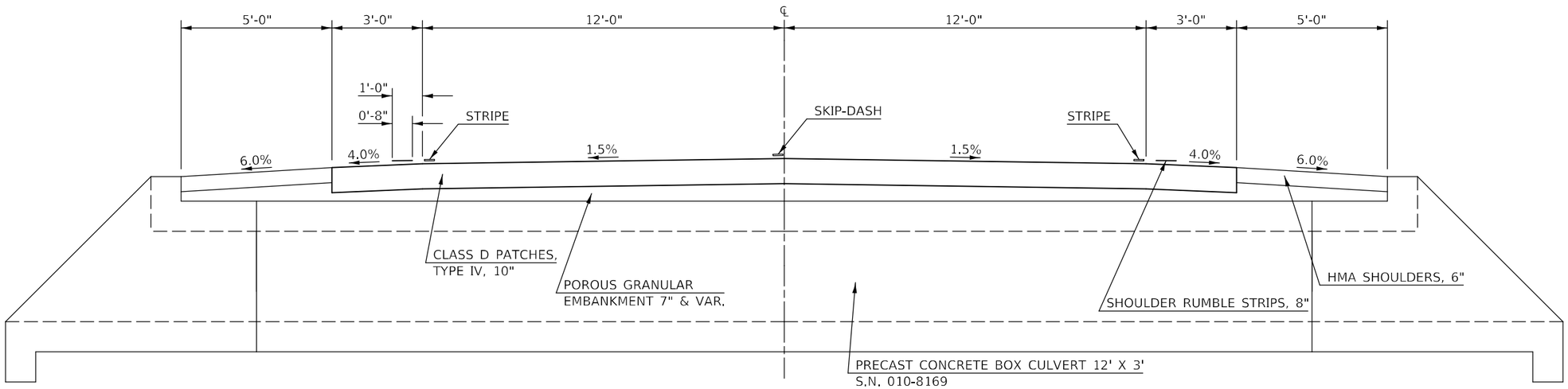

PROPOSED TYPICAL CROSS-SECTION 9

STATION TO STATION

6 212+46.00 212+78.00 6

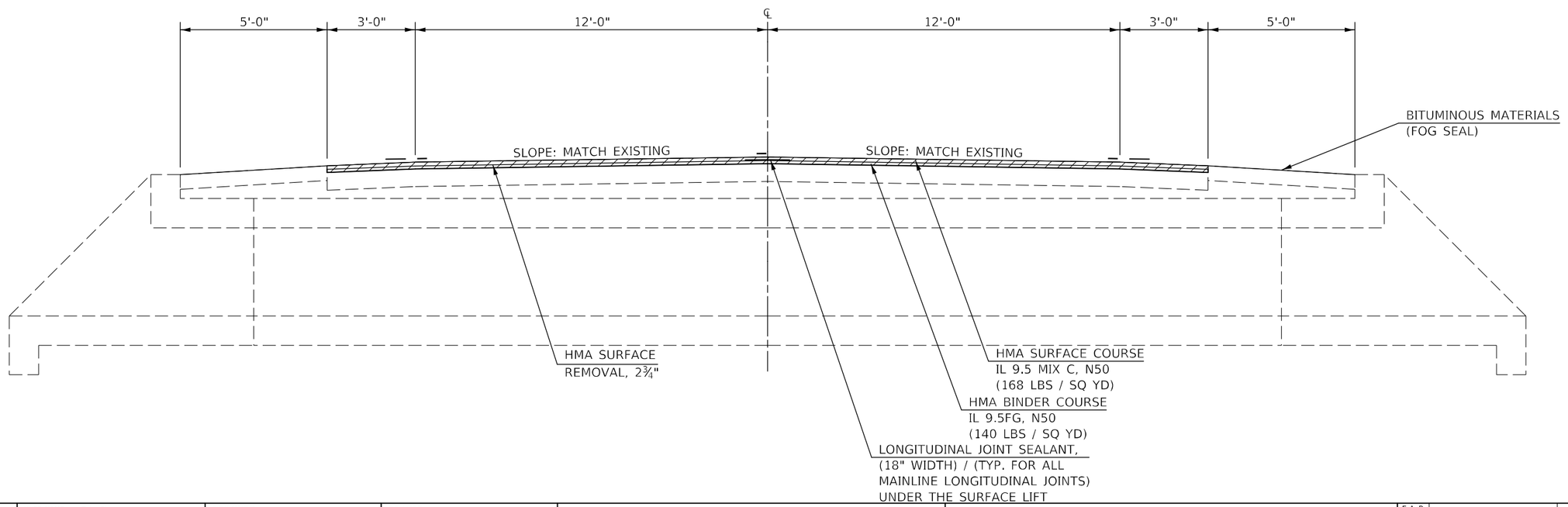

USER NAME = Tyler.Pierson	DESIGNED -	REVISED -	STATE OF ILLINOIS DEPARTMENT OF TRANSPORTATION	FAP 709 (US 136) TYPICAL CROSS-SECTIONS	F.A.P. RTE.	SECTION	COUNTY	TOTAL SHEETS / SHEET NO.
	DRAWN -	REVISED -			709	(113)RS-7	CHAMPAIGN	103 / 41
PLOT SCALE = 4.0000 ' / in.	CHECKED -	REVISED -					CONTRACT NO. 70944	
PLOT DATE = 1/26/2023	DATE -	REVISED -		SCALE: N.T.S. / SHEET 10 OF 12 SHEETS / STA. TO STA.			ILLINOIS FED. AID PROJECT	

MODEL: $MODELNAME$
FILE NAME: pw:\\ildot-pw.bentley.com:PWIDOT\Documents\IDOT Offices\Districts $Project\D570944\CADData\CADsheets\D570944-sht-Typical Cross Sections.dgn

EXISTING TYPICAL CROSS-SECTION 10

STATION TO STATION

6 297+86.00 301+71.00 6

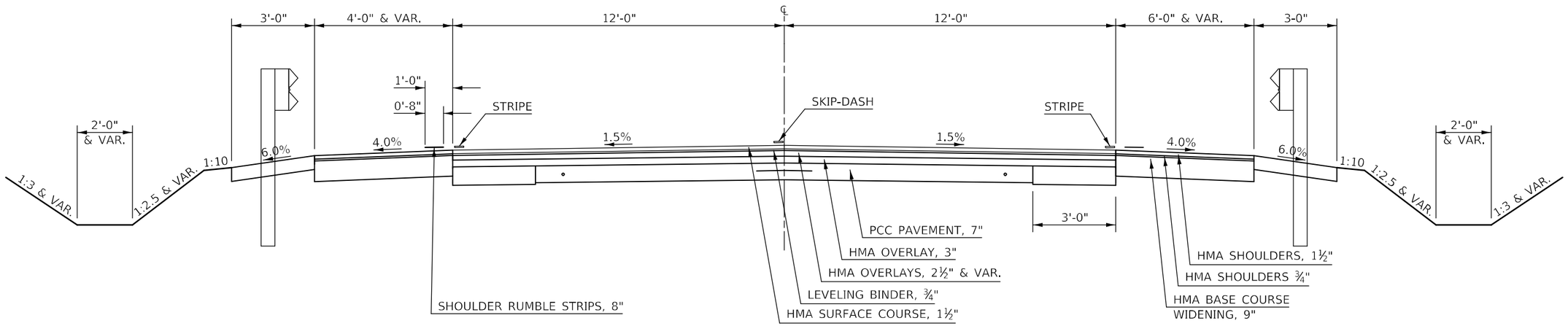

PROPOSED TYPICAL CROSS-SECTION 10

HMA SURFACE REMOVAL, 2¾"

STATION TO STATION

6 297+86.00 301+71.00 6

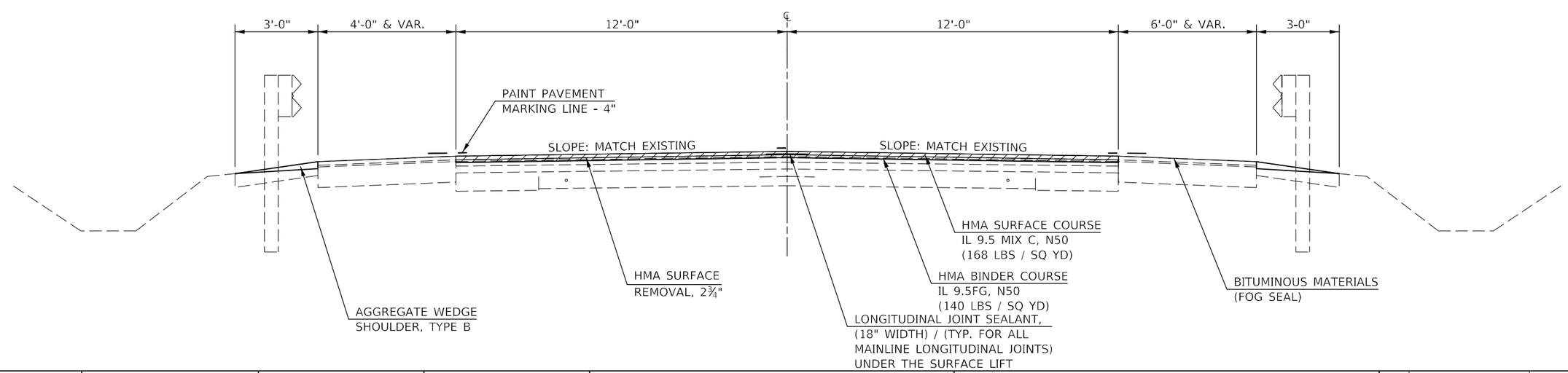

MODEL: $MODEL$NAME$
FILE NAME: pw:\\ildot-pw.bentley.com:PWIDOT\Documents\IDOT Offices\Districts 5\Project\D570944\CADData\CADsheets\D570944-sht-Typical Cross Sections.dgn

USER NAME = Tyler.Pierson	DESIGNED -	REVISED -	STATE OF ILLINOIS DEPARTMENT OF TRANSPORTATION	FAP 709 (US 136) TYPICAL CROSS-SECTIONS	F.A.P. RTE.	SECTION	COUNTY	TOTAL SHEETS / SHEET NO.
	DRAWN -	REVISED -			709	(113)RS-7	CHAMPAIGN	103 / 42
PLOT SCALE = 4.0000 ' / in.	CHECKED -	REVISED -					CONTRACT NO. 70944	
PLOT DATE = 1/26/2023	DATE -	REVISED -		SCALE: N.T.S. SHEET 11 OF 12 SHEETS STA. TO STA.		ILLINOIS	FED. AID PROJECT	

EXISTING TYPICAL CROSS-SECTION 11

STATION	TO	STATION
6 365+82.00		374+75.00 6
6 379+65.00		396+13.00 6
6 398+18.00		403+82.00 6

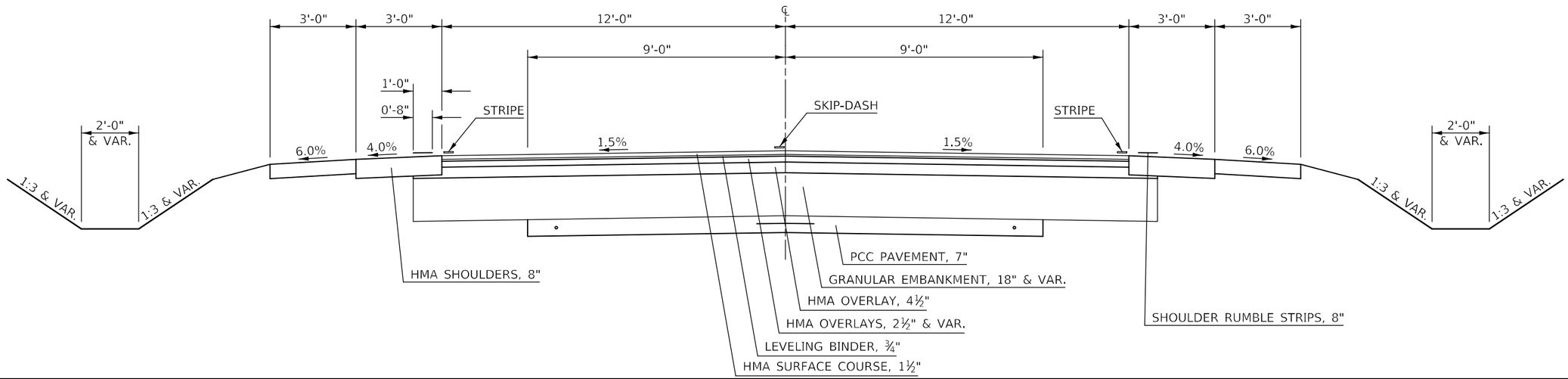

PROPOSED TYPICAL CROSS-SECTION 11

HMA SURFACE REMOVAL, 2¾"

STATION	TO	STATION
6 365+82.00		374+75.00 6
6 379+65.00		396+13.00 6
6 398+18.00		403+82.00 6

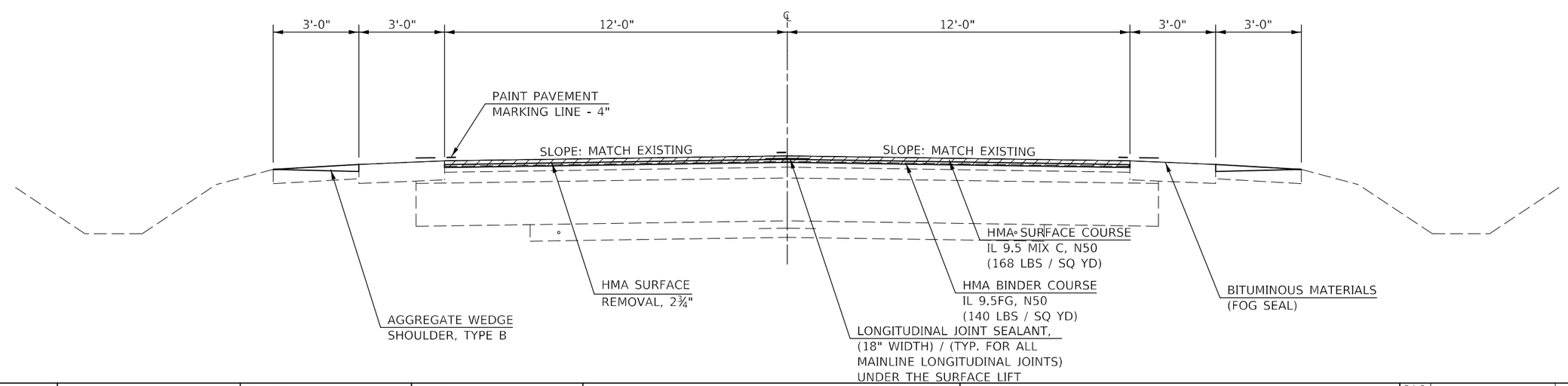

MODEL: SMODELNAME5
FILE NAME: pw:\\ildot-pw.bentley.com:PWIDOT\Documents\IDOT Offices\District 5\Projects\D570944\CADData\CADsheets\D570944-sht-Typical Cross Sections.dgn

USER NAME = Tyler.Pierson	DESIGNED -	REVISED -	STATE OF ILLINOIS DEPARTMENT OF TRANSPORTATION
	DRAWN -	REVISED -	
PLOT SCALE = 4.0000 ' / in.	CHECKED -	REVISED -	
PLOT DATE = 1/26/2023	DATE -	REVISED -	

FAP 709 (US 136) TYPICAL CROSS-SECTIONS

SCALE: N.T.S. | SHEET 12 OF 12 SHEETS | STA. TO STA.

F.A.P. RTE.	SECTION	COUNTY	TOTAL SHEETS	SHEET NO.
709	(113)RS-7	CHAMPAIGN	103	43
		CONTRACT NO. 70944		
		ILLINOIS FED. AID PROJECT		

CONTROL POINTS

CENTERLINE POINTS								
PT #	NORTHING	EASTING	STATION	OFFSET	CODE	DESC	EXISTING	SET AFTER CONST
106	1,327,669.889	1,039,078.392	2362+39.04/100+00	0.00	832	STA EQ	MAG NAIL	TYPE II
1	1,327,675.292	1,039,577.947	104+99.58	0.00	832	POT	PSM	TYPE II
105	1,327,693.125	1,041,374.738	122+99.99	-1.47	820	PI	MAG NAIL	TYPE II
2	1,327,691.103	1,042,499.257	134+24.51	0.00	820	PI	PSM	TYPE II
50	1,327,689.481	1,043,858.411	147+88.76	1.44	820	PI	PSM	TYPE II
51	1,327,795.778	1,050,060.588	209+87.74	0.00	820	PI	PSM	TYPE II
8	1,327,822.839	1,052,676.649	236+03.94	0.00	820	PI	PSM	TYPE II
52	1,327,850.810	1,054,958.380	258+85.84	0.00	820	PI	PSM	TYPE II
58	1,327,875.707	1,056,677.121	276+04.76	0.00	820	PI	PSM	TYPE II
53	1,327,882.851	1,057,287.012	282+14.70	0.00	820	PI	PSM	TYPE II
54	1,327,913.889	1,060,679.200	316+07.33	0.00	820	PI	PSM	TYPE II
55	1,327,958.982	1,065,390.978	363+19.32	0.00	820	PI	PSM	TYPE II
56	1,327,972.686	1,066,689.415	376+17.83	0.00	820	PI	PSM	TYPE II
57	1,327,989.212	1,068,953.196	398+81.68	0.00	820	PI	PSM	TYPE II

SECTION CORNERS								
POINT #	NORTHING	EASTING	STATION	OFFSET	CODE	DESCRIPTION	EXISTING	SET AFTER CONST
100	1,327,672.740	1,039,137.323	100+58.96	-2.21	200	SECTION CORNER	VAULT	VAULT
1558	1,327,702.070	1,044,449.895	153+80.36	-2.45	200	SECTION CORNER	PSM	VAULT
2306	1,327,749.982	1,047,198.821	181+29.70	-3.25	200	SECTION CORNER	MAG NAIL	VAULT
2307	1,327,749.927	1,047,200.631	181+31.51	-3.16	200	SECTION CORNER	MAG NAIL	VAULT
3614	1,327,799.283	1,049,935.674	208+62.90	-5.64	200	SECTION CORNER	MAG NAIL	VAULT
10276	1,327,826.807	1,052,566.267	234+93.60	-5.11	201	QUARTER CORNER	MAG NAIL	VAULT
11341	1,327,853.258	1,055,112.472	260+39.95	-0.22	200	SECTION CORNER	PSM	VAULT
11366	1,327,854.485	1,055,211.507	261+39.00	-0.01	200	SECTION CORNER	MAG NAIL	VAULT
4192	1,327,883.790	1,057,805.020	287+32.69	3.80	200	SECTION CORNER	MAG NAIL	VAULT
5123	1,327,914.287	1,060,497.376	314+25.52	-2.06	200	SECTION CORNER	MAG NAIL	VAULT
5125	1,327,914.889	1,060,563.426	314+91.57	-2.06	200	SECTION CORNER	MAG NAIL	VAULT
5816	1,327,940.174	1,063,181.477	341+09.74	-2.34	201	QUARTER CORNER	MAG NAIL	VAULT
5817	1,327,940.083	1,063,179.391	341+07.66	-2.27	201	QUARTER CORNER	MAG NAIL	VAULT
6401	1,327,965.883	1,065,847.864	367+76.26	-2.08	200	SECTION CORNER	MAG NAIL	VAULT
6402	1,327,965.629	1,065,860.967	367+89.36	-1.69	200	SECTION CORNER	MAG NAIL	VAULT

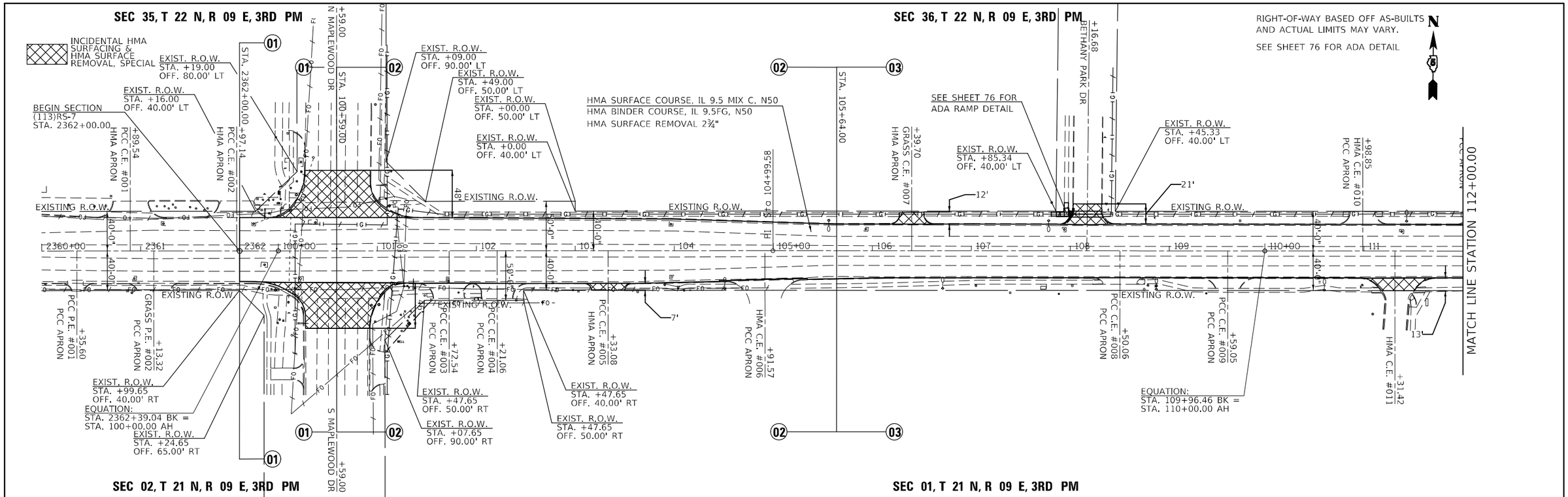

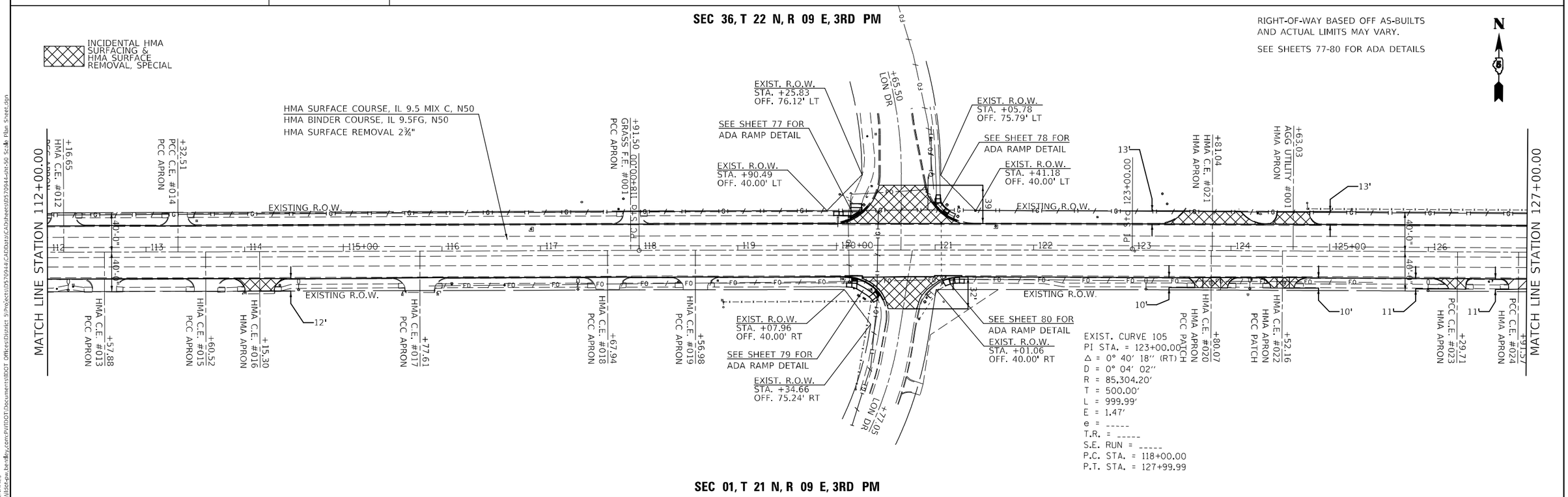

USER NAME = Tyler.Pierson	DESIGNED -	REVISED -	
	DRAWN -	REVISED -	
PLOT SCALE = 100.0000 ' / in.	CHECKED -	REVISED -	
PLOT DATE = 1/26/2023	DATE -	REVISED -	

STATE OF ILLINOIS
DEPARTMENT OF TRANSPORTATION

FAP 709 (US 136) PLAN SHEETS

SCALE: 1" = 50' | SHEET 1 OF 11 SHEETS | STA. 2360+00.00 TO STA. 127+00.00

F.A.P. RTE.	SECTION	COUNTY	TOTAL SHEETS	SHEET NO.
709	(113)RS-7	CHAMPAIGN	103	45
		CONTRACT NO. 70944		
		ILLINOIS	FED. AID PROJECT	

MODEL: $MODELNAME$
FILE NAME: pw:\\ildot-pw.bentley.com:PWIDOT\Documents\IDOT Offices\District 5\Project\D570944\CADData\CADsheets\D570944-sht-50 Scale Plan Sheet.dgn

SEC 36, T 22 N, R 09 E, 3RD PM

INCIDENTAL HMA SURFACING & HMA SURFACE REMOVAL, SPECIAL

BITUMINOUS MATERIALS, (FOG SEAL)

RIGHT-OF-WAY BASED OFF AS-BUILTS AND ACTUAL LIMITS MAY VARY.

N

MATCH LINE STATION 127+00.00

MATCH LINE STATION 142+00.00

STA. 130+36.50

STA. 139+81.50

STA. 141+00.00

+09.41 GRASS UTILITY #002

+19.42 HMA UTILITY #003

+41.15 HMA UTILITY #004

HMA APRON

HMA SURFACE COURSE, IL 9.5 MIX C, N50
HMA BINDER COURSE, IL 9.5FG, N50
HMA SURFACE REMOVAL 2¾"

EXISTING R.O.W.

127 128 129 130+00 131 132 133 134 135+00 136 137 138 139 140+00 141

40'-0"

27'

7'

12'

10'

11'

PCC C.E. #025 +45.89 HMA APRON

PCC C.E. #026 +39.43 HMA APRON

PCC C.E. #027 +06.74 HMA APRON

EQUATION:
STA. 134+37.90 BK =
STA. 134+40.40 AH

EQUATION:
STA. 139+97.40 BK =
STA. 140+00.00 AH

BITUMINOUS MATERIALS (FOG SEAL)

SEC 01, T 21 N, R 09 E, 3RD PM

SEC 36, T 22 N, R 09 E, 3RD PM

SEC 31, T 22 N, R 10 E, 3RD PM

RIGHT-OF-WAY BASED OFF AS-BUILTS AND ACTUAL LIMITS MAY VARY.

N

INCIDENTAL HMA SURFACING & HMA SURFACE REMOVAL, SPECIAL

BITUMINOUS MATERIALS, (FOG SEAL)

MATCH LINE STATION 142+00.00

MATCH LINE STATION 157+00.00

+63.94 GRASS F.E. #002 HMA APRON

PC Sta 144+73.77

STA. 147+97.00

STA. 150+25.80

STA. 151+15.50

+81.99 TOWNSHIP HIGHWAY 178E

STA. 153+58.00

HMA SURFACE COURSE, IL 9.5 MIX C, N50
HMA BINDER COURSE, IL 9.5FG, N50
HMA SURFACE REMOVAL 2¾"

EXIST. R.O.W.
STA. +00.00
OFF. 60.00' LT

EXIST. R.O.W.
STA. +00.00
OFF. 40.00' LT

S.N. 010-8069
STA. 150+71
HMA RESURFACING

PC Sta 151+03.74

EXIST. R.O.W.
STA. +70.00
OFF. 60.00' LT

EXIST. R.O.W.
STA. +10.00
OFF. 40.00' LT

EXISTING R.O.W.

142 143 144 145+00 146 147 148 149 150+00 151 152 153 154 155+00 156

40'-0"

60'-0"

75'-0"

26'

28'

PC Sta 147+88.76

EXIST. R.O.W.
STA. +00.00
OFF. 40.00' RT

EXIST. R.O.W.
STA. +00.00
OFF. 75.00' RT

BITUMINOUS MATERIALS (FOG SEAL)

EXIST. CURVE 50
PI STA. = 147+88.76
Δ = 1° 03′ 01″ (LT)
D = 0° 10′ 00″
R = 34,366.33′
T = 314.99′
L = 629.96′
E = 1.44′
e = -----
T.R. = -----
S.E. RUN = -----
P.C. STA. = 144+73.77
P.T. STA. = 151+03.74

EXIST. R.O.W.
STA. +52.00
OFF. 75.00' RT

+42.74 GRASS F.E. #003

TOWNSHIP HIGHWAY 178E

+82.21

EXIST. R.O.W.
STA. +07.00
OFF. 40.00' RT

SEC 01, T 21 N, R 09 E, 3RD PM

SEC 06, T 21 N, R 10 E, 3RD PM

MODEL: $MODELNAMES
FILE NAME: pw:\\ildot-pw.bentley.com:PWIDOT\Documents\IDOT Offices\District 5\Project\D570944\CAD\Dgns\C42sheets\D570944-sht-50 Scale Plan Sheet.dgn

USER NAME = Tyler.Pierson	DESIGNED -	REVISED -
	DRAWN -	REVISED -
PLOT SCALE = 100.0000 ' / in.	CHECKED -	REVISED -
PLOT DATE = 1/26/2023	DATE -	REVISED -

STATE OF ILLINOIS
DEPARTMENT OF TRANSPORTATION

FAP 709 (US 136) PLAN SHEETS

SCALE: 1" = 50' | SHEET 2 OF 11 SHEETS | STA. 127+00.00 TO STA. 157+00.00

F.A.P. RTE.	SECTION	COUNTY	TOTAL SHEETS	SHEET NO.
709	(113)RS-7	CHAMPAIGN	103	46
		CONTRACT NO. 70944		
		ILLINOIS	FED. AID PROJECT	

SEC 31, T 22 N, R 10 E, 3RD PM

RIGHT-OF-WAY BASED OFF AS-BUILTS
AND ACTUAL LIMITS MAY VARY.

N

INCIDENTAL HMA SURFACING & HMA SURFACE REMOVAL, SPECIAL

BITUMINOUS MATERIALS, (FOG SEAL)

HMA SURFACE COURSE, IL 9.5 MIX C, N50
HMA BINDER COURSE, IL 9.5FG, N50
HMA SURFACE REMOVAL 2¾"

MATCH LINE STATION 157+00.00

+50.03 GRASS F.E. #004

EXISTING R.O.W.

40'-0"

157 | 158 | 159 | 160+00 | 161 | 162 | 163 | 164 | 165+00 | 166 | 167 | 168 | 169 | 170+00 | 171

+25.06 HMA C.E. #028 HMA APRON

+41.52 HMA C.E. #029 HMA APRON

EXISTING R.O.W.

40'-0"

EXISTING R.O.W.

8'

GRASS F.E. #005 +51.75 HMA APRON

BITUMINOUS MATERIALS (FOG SEAL)

EXISTING R.O.W.

GRASS F.E. #006 +03.43

MATCH LINE STATION 172+00.00

SEC 06, T 21 N, R 10 E, 3RD PM

SEC 31, T 22 N, R 10 E, 3RD PM

RIGHT-OF-WAY BASED OFF AS-BUILTS
AND ACTUAL LIMITS MAY VARY.

N

BITUMINOUS MATERIALS, (FOG SEAL)

EXIST. R.O.W.
STA. +60.00
OFF. 60.00' LT

EXIST. R.O.W.
STA. +60.00
OFF. 40.00' LT

BEGIN OMISSION
STA. 173+55.76

EXIST. R.O.W.
STA. +20.00
OFF. 60.00' LT

EXIST. R.O.W.
STA. +20.00
OFF. 40.00' LT

HMA SURFACE COURSE, IL 9.5 MIX C, N50
HMA BINDER COURSE, IL 9.5FG, N50
HMA SURFACE REMOVAL 2¾"

MATCH LINE STATION 172+00.00

+44.74 HMA C.E. #030 HMA APRON

+14.36 GRASS F.E. #007

EXISTING R.O.W.

+19.40 AGG F.E. #008

EXISTING R.O.W.

40'-0"

60'-0"

172 | 173 | 174 | 175+00 | 176 | 177 | 178 | 179 | 180+00 | 181 | 182 | 183 | 184 | 185+00 | 186

EXISTING R.O.W.

EXISTING R.O.W.

AGG F.E. #009 +13.91

EXIST. R.O.W.
STA. +20.00
OFF. 40.00' RT

EXIST. R.O.W.
STA. +60.00
OFF. 40.00' RT

S.N. 010-0252
STA. 174+16.90
OMIT E-E APPR.

END OMISSION
STA. 174+75.52

EXIST. R.O.W.
STA. +20.00
OFF. 60.00' RT

BITUMINOUS MATERIALS (FOG SEAL)

EXIST. R.O.W.
STA. +06.00
OFF. 60.00' RT

MATCH LINE STATION 187+00.00

SEC 06, T 21 N, R 10 E, 3RD PM

USER NAME = Tyler.Pierson	DESIGNED -	REVISED -	STATE OF ILLINOIS DEPARTMENT OF TRANSPORTATION
	DRAWN -	REVISED -	
PLOT SCALE = 100.0000 ' / in.	CHECKED -	REVISED -	
PLOT DATE = 1/26/2023	DATE -	REVISED -	

FAP 709 (US 136) PLAN SHEETS

SCALE: 1" = 50' | SHEET 3 OF 11 SHEETS | STA. 157+00.00 TO STA. 187+00.00

F.A.P. RTE.	SECTION	COUNTY	TOTAL SHEETS	SHEET NO.
709	(113)RS-7	CHAMPAIGN	103	47
		CONTRACT NO. 70944		
		ILLINOIS FED. AID PROJECT		

MODEL: $MODELNAME$
FILE NAME: pw:\\ildot-pw.bentley.com:PWIDOT\Documents\IDOT Offices\District 5\Project\D570944\CADData\CADsheets\D570944-sht-50 Scale Plan Sheet.dgn

SEC 31, T 22 N, R 10 E, 3RD PM

RIGHT-OF-WAY BASED OFF AS-BUILTS
AND ACTUAL LIMITS MAY VARY.

BITUMINOUS MATERIALS, (FOG SEAL)

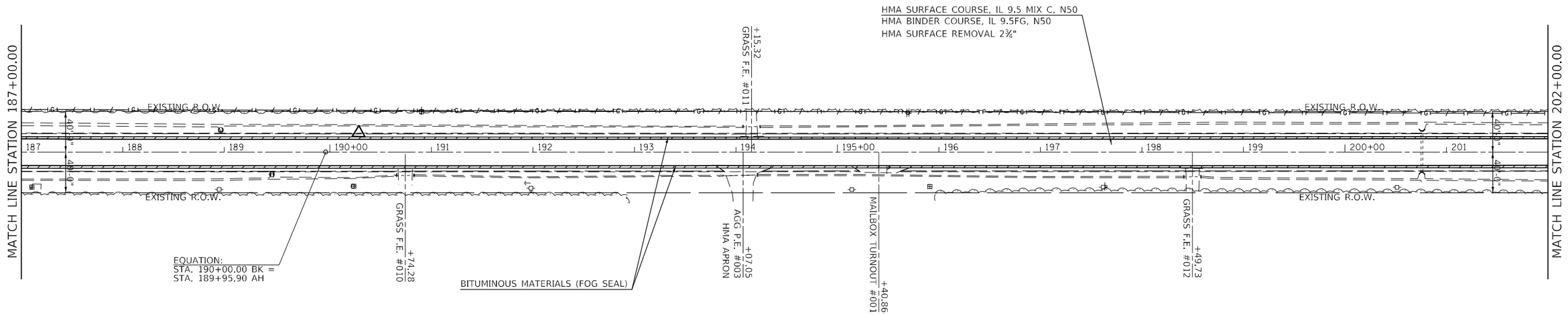

SEC 06, T 21 N, R 10 E, 3RD PM

SEC 31, T 22 N, R 10 E, 3RD PM

SEC 32, T 22 N, R 10 E, 3RD PM

RIGHT-OF-WAY BASED OFF AS-BUILTS
AND ACTUAL LIMITS MAY VARY.
FOR CULVERT INFORMATION SEE SHEETS 56-59
FOR DRAINAGE PLAN & PROFILE SHEETS

INCIDENTAL HMA SURFACING & HMA SURFACE REMOVAL, SPECIAL

BITUMINOUS MATERIALS, (FOG SEAL)

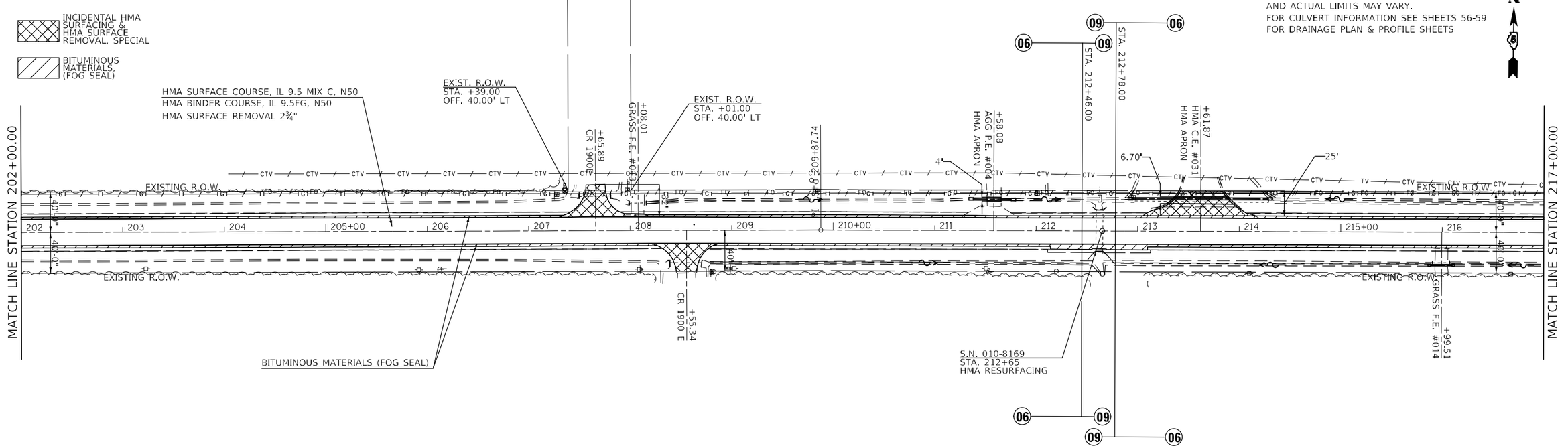

SEC 06, T 21 N, R 10 E, 3RD PM

SEC 05, T 21 N, R 10 E, 3RD PM

MODEL: $MODEL NAMES
FILE NAME: pw:\\ildot-pw.bentley.com:PWIDOT\Documents\IDOT Offices\District 5\Projects\D570944\CADData\CADsheets\D570944-sht-50 Scale Plan Sheet.dgn

USER NAME = Tyler.Pierson	DESIGNED -	REVISED -	
	DRAWN -	REVISED -	
PLOT SCALE = 100.0000 ' / in.	CHECKED -	REVISED -	
PLOT DATE = 1/26/2023	DATE -	REVISED -	

STATE OF ILLINOIS
DEPARTMENT OF TRANSPORTATION

FAP 709 (US 136) PLAN SHEETS

SCALE: 1" = 50' | SHEET 4 OF 11 SHEETS | STA. 187+00.00 TO STA. 217+00.00

F.A.P. RTE.	SECTION	COUNTY	TOTAL SHEETS	SHEET NO.
709	(113)RS-7	CHAMPAIGN	103	48
		CONTRACT NO. 70944		
		ILLINOIS	FED. AID PROJECT	

SEC 32, T 22 N, R 10 E, 3RD PM

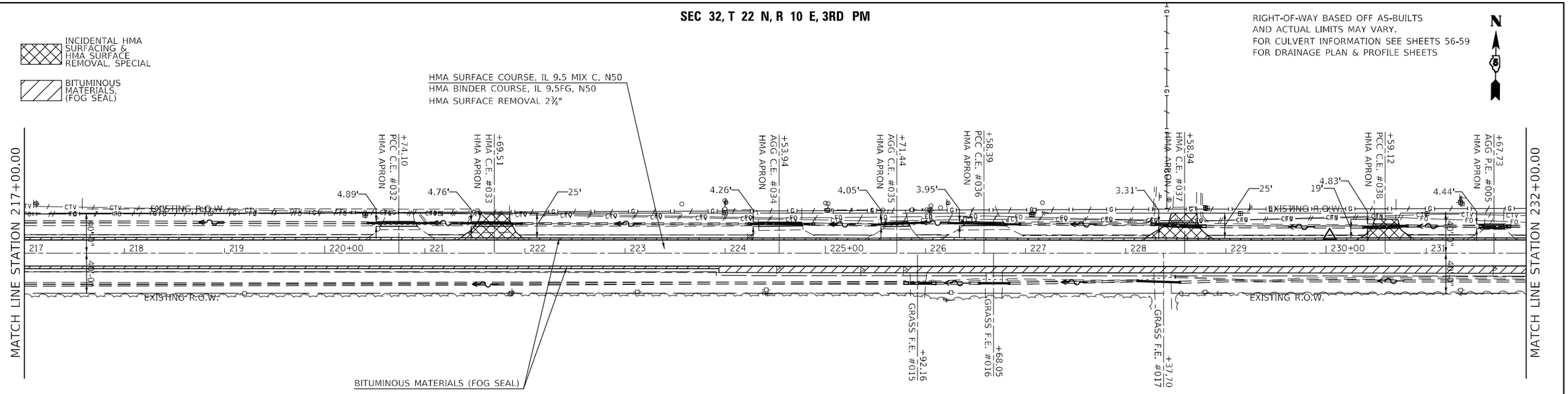

SEC 05, T 21 N, R 10 E, 3RD PM

SEC 32, T 22 N, R 10 E, 3RD PM

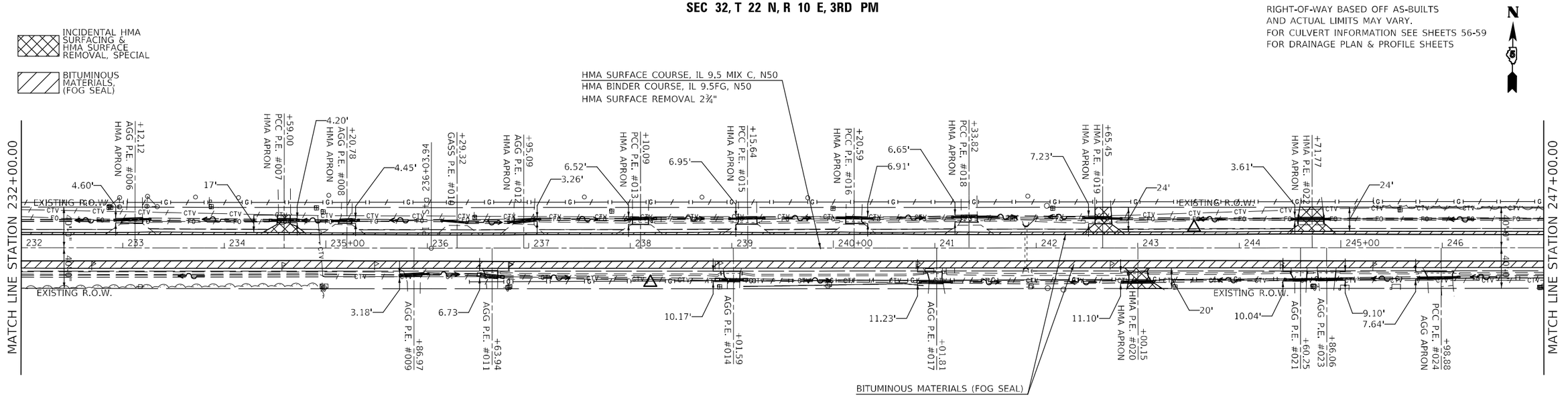

SEC 05, T 21 N, R 10 E, 3RD PM

USER NAME = Tyler.Pierson	DESIGNED -	REVISED -	STATE OF ILLINOIS DEPARTMENT OF TRANSPORTATION	FAP 709 (US 136) PLAN SHEETS	F.A.P. RTE.	SECTION	COUNTY	TOTAL SHEETS	SHEET NO.
	DRAWN -	REVISED -			709	(113)RS-7	CHAMPAIGN	103	49
PLOT SCALE = 100.0000 ' / in.	CHECKED -	REVISED -					CONTRACT NO. 70944		
PLOT DATE = 1/26/2023	DATE -	REVISED -		SCALE: 1" = 50' SHEET 5 OF 11 SHEETS STA. 217+00.00 TO STA. 247+00.00			ILLINOIS FED. AID PROJECT		

MODEL: $MODELNAME$
FILE NAME: pw:\\ildot-pw.bentley.com:PWIDOT\Documents\IDOT Offices\District 5\Project\D570944\CADData\CADsheets\D570944-sht-50 Scale Plan Sheet.dgn

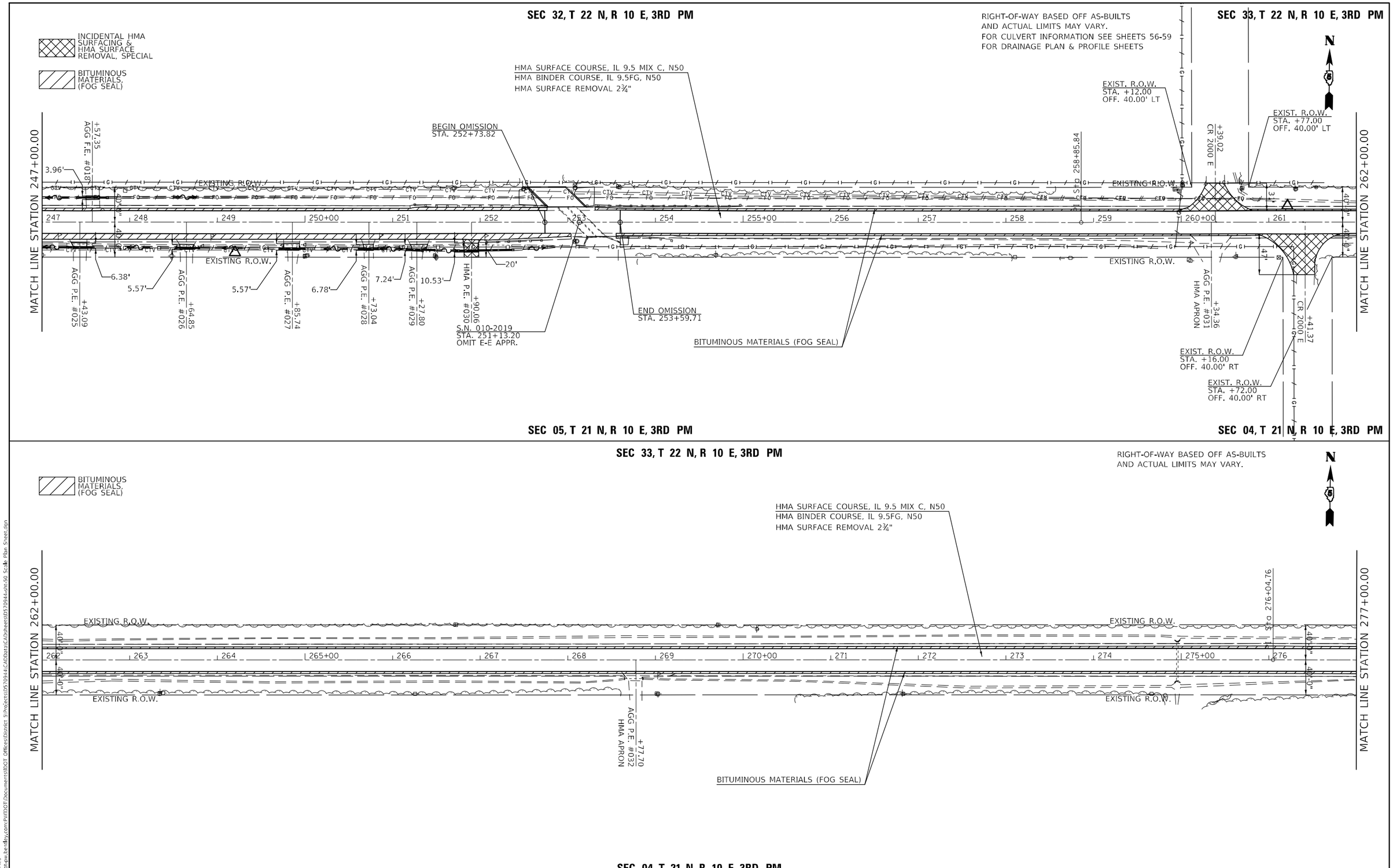

SEC 04, T 21 N, R 10 E, 3RD PM

USER NAME = Tyler.Pierson	DESIGNED -	REVISED -	STATE OF ILLINOIS DEPARTMENT OF TRANSPORTATION	FAP 709 (US 136) PLAN SHEETS	F.A.P. RTE.	SECTION	COUNTY	TOTAL SHEETS	SHEET NO.
	DRAWN -	REVISED -			709	(113)RS-7	CHAMPAIGN	103	50
PLOT SCALE = 100.0000 ' / in.	CHECKED -	REVISED -					CONTRACT NO. 70944		
PLOT DATE = 1/26/2023	DATE -	REVISED -		SCALE: 1" = 50' SHEET 6 OF 11 SHEETS STA. 247+00.00 TO STA. 277+00.00			ILLINOIS FED. AID PROJECT		

MODEL: $MODELNAME$
FILE NAME: pw:\\ildot-pw.bentley.com:PWIDOT\Documents\IDOT Offices\District 5\Project\D570944\CADData\CADsheets\D570944-sht-50 Scale Plan Sheet.dgn

SEC 33, T 22 N, R 10 E, 3RD PM

RIGHT-OF-WAY BASED OFF AS-BUILTS AND ACTUAL LIMITS MAY VARY.

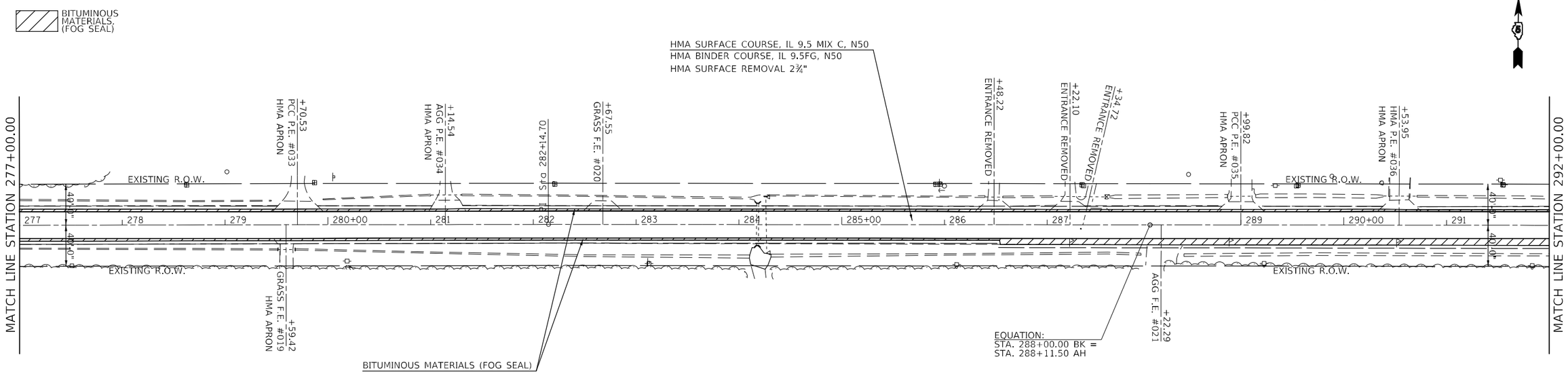

SEC 04, T 21 N, R 10 E, 3RD PM

SEC 33, T 22 N, R 10 E, 3RD PM

RIGHT-OF-WAY BASED OFF AS-BUILTS AND ACTUAL LIMITS MAY VARY.

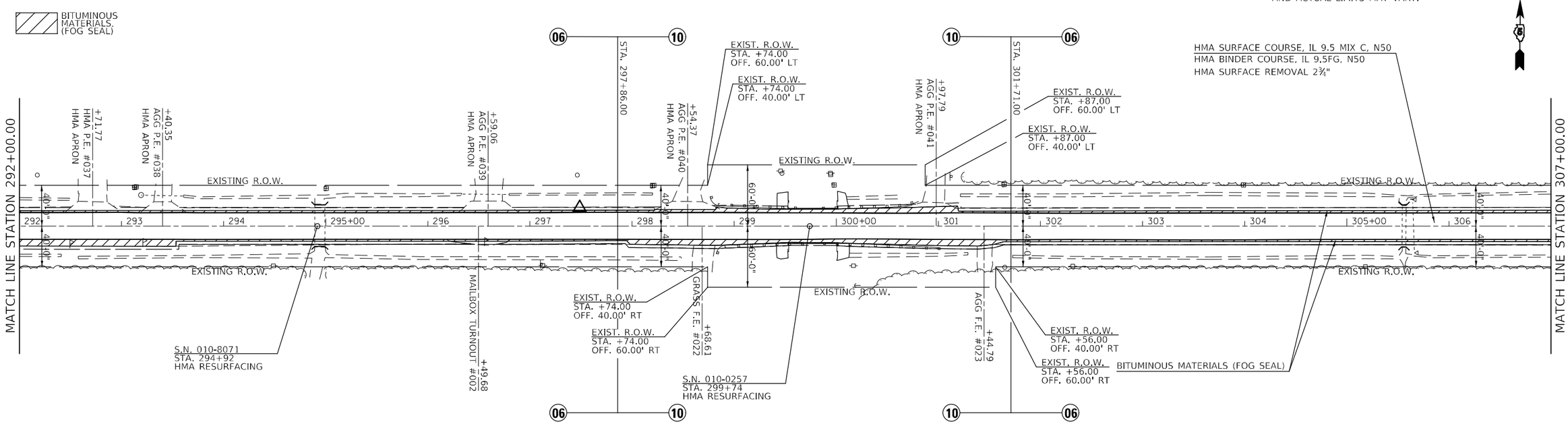

SEC 04, T 21 N, R 10 E, 3RD PM

MODEL: $MODELNAME$
FILE NAME: pw:\\ildot-pw.bentley.com:PWIDOT\Documents\IDOT Offices\District 5\Project\D570944\CADData\CADsheets\D570944-sht-50 Scale Plan Sheet.dgn

USER NAME = Tyler.Pierson	DESIGNED -	REVISED -	STATE OF ILLINOIS DEPARTMENT OF TRANSPORTATION
	DRAWN -	REVISED -	
PLOT SCALE = 100.0000 ' / in.	CHECKED -	REVISED -	
PLOT DATE = 1/26/2023	DATE -	REVISED -	

FAP 709 (US 136) PLAN SHEETS

SCALE: 1" = 50' | SHEET 7 OF 11 SHEETS | STA. 277+00.00 TO STA. 307+00.00

F.A.P. RTE.	SECTION	COUNTY	TOTAL SHEETS	SHEET NO.
709	(113)RS-7	CHAMPAIGN	103	51
		CONTRACT NO. 70944		
		ILLINOIS FED. AID PROJECT		

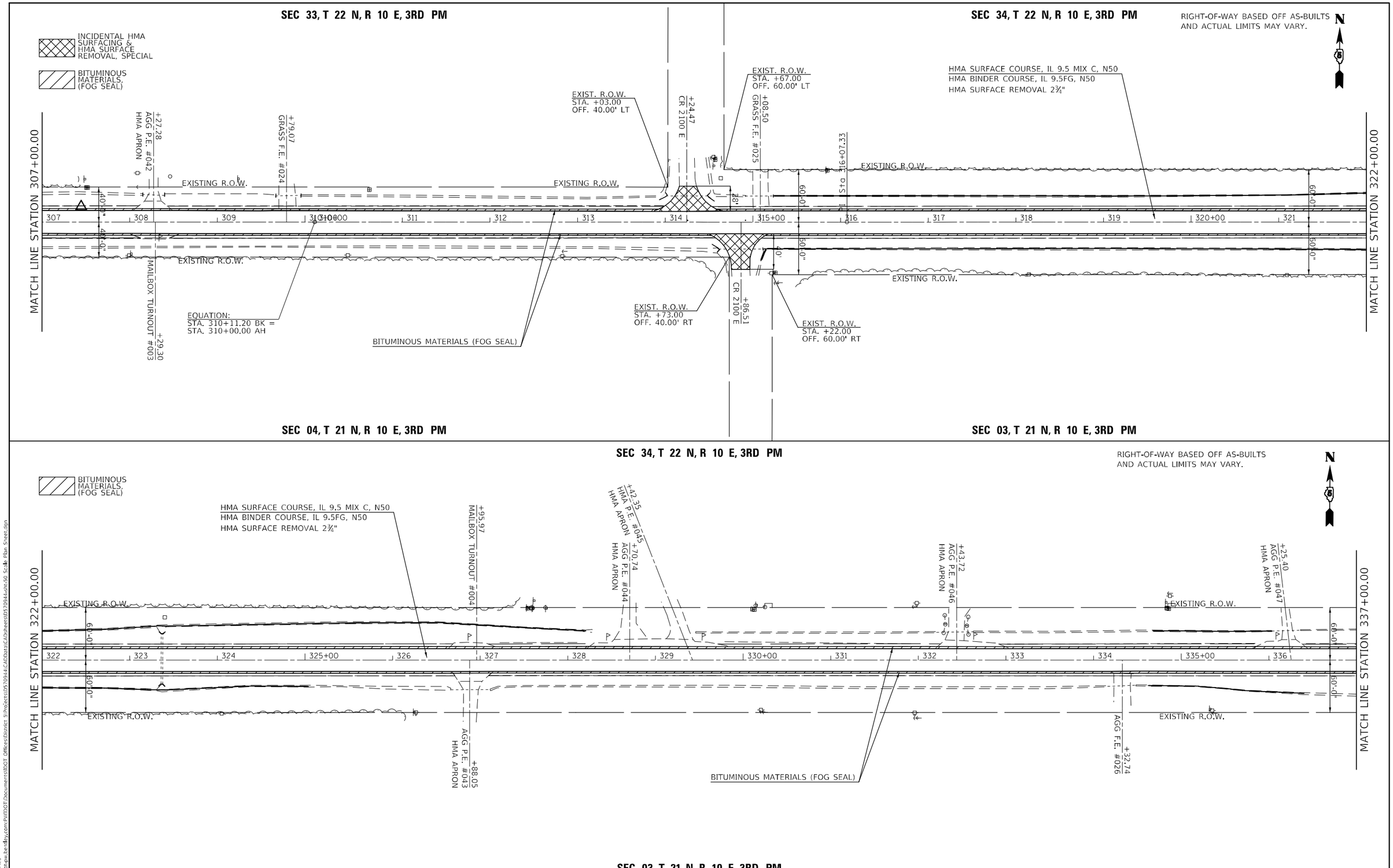

MODEL: $MODELNAME$
FILE NAME: pw:\\ildot-pw.bentley.com:PWIDOT\Documents\IDOT Offices\District 5\Project\D570944\CADData\CADsheets\D570944-sht-50 Scale Plan Sheet.dgn

USER NAME = Tyler.Pierson	DESIGNED -	REVISED -	
	DRAWN -	REVISED -	
PLOT SCALE = 100.0000 ' / in.	CHECKED -	REVISED -	
PLOT DATE = 1/26/2023	DATE -	REVISED -	

STATE OF ILLINOIS
DEPARTMENT OF TRANSPORTATION

FAP 709 (US 136) PLAN SHEETS

SCALE: 1" = 50' | SHEET 8 OF 11 SHEETS | STA. 307+00.00 TO STA. 337+00.00

F.A.P. RTE.	SECTION	COUNTY	TOTAL SHEETS	SHEET NO.
709	(113)RS-7	CHAMPAIGN	103	52
		CONTRACT NO. 70944		

ILLINOIS FED. AID PROJECT

SEC 34, T 22 N, R 10 E, 3RD PM

RIGHT-OF-WAY BASED OFF AS-BUILTS
AND ACTUAL LIMITS MAY VARY.

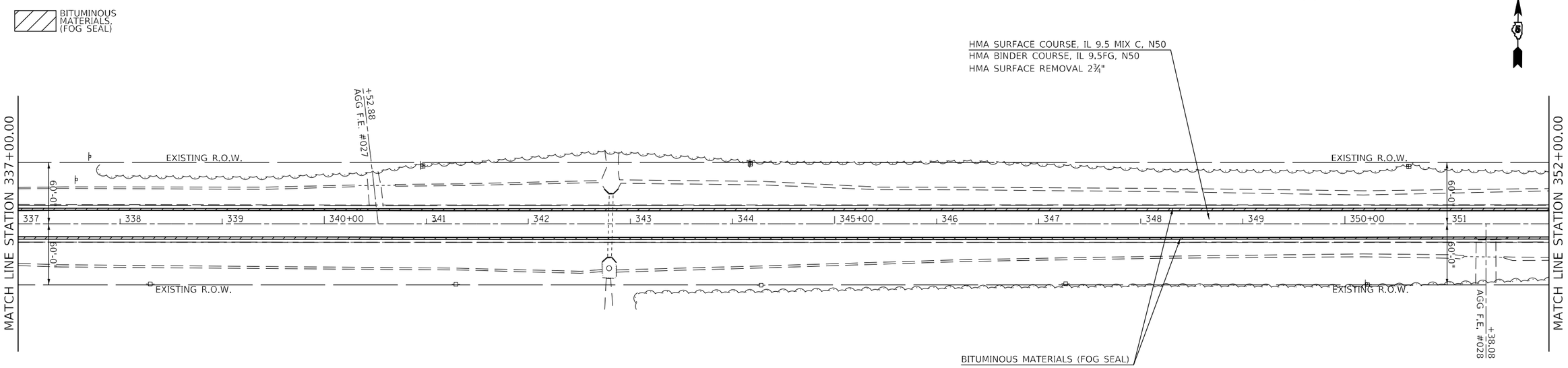

SEC 03, T 21 N, R 10 E, 3RD PM

SEC 34, T 22 N, R 10 E, 3RD PM

RIGHT-OF-WAY BASED OFF AS-BUILTS
AND ACTUAL LIMITS MAY VARY.

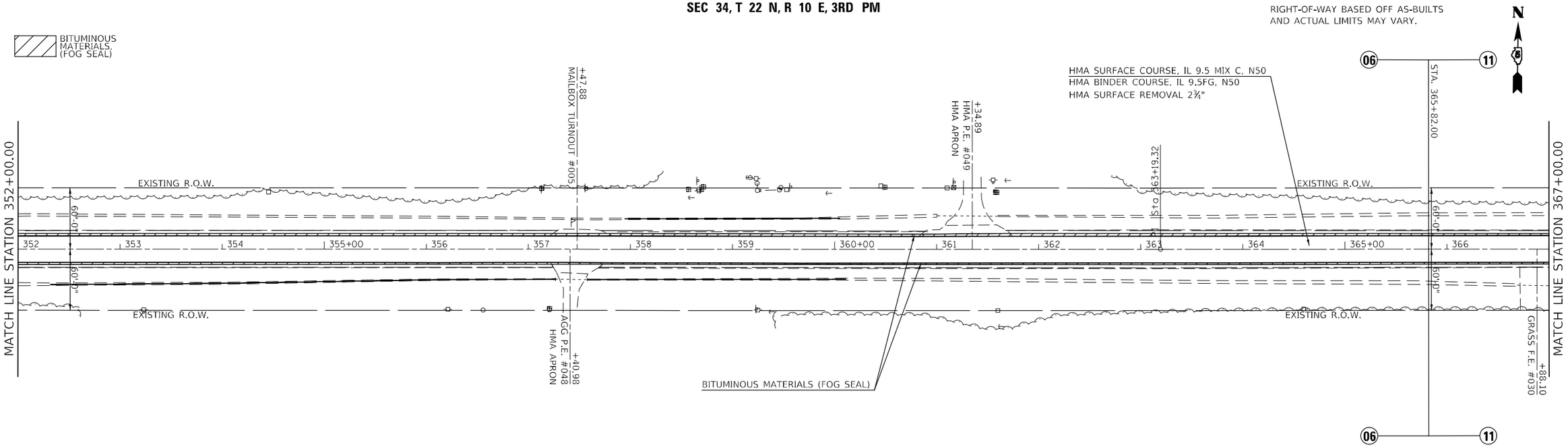

SEC 03, T 21 N, R 10 E, 3RD PM

MODEL: $MODELNAME$
FILE NAME: pw:\\ildot-pw.bentley.com:PWIDOT\Documents\IDOT Offices\District 5\Project\D570944\CADData\CADsheets\D570944-sht-50 Scale Plan Sheet.dgn

USER NAME = Tyler.Pierson	DESIGNED -	REVISED -	STATE OF ILLINOIS DEPARTMENT OF TRANSPORTATION
	DRAWN -	REVISED -	
PLOT SCALE = 100.0000 ' / in.	CHECKED -	REVISED -	
PLOT DATE = 1/26/2023	DATE -	REVISED -	

FAP 709 (US 136) PLAN SHEETS

SCALE: 1" = 50' | SHEET 9 OF 11 SHEETS | STA. 337+00.00 TO STA. 367+00.00

F.A.P. RTE.	SECTION	COUNTY	TOTAL SHEETS	SHEET NO.
709	(113)RS-7	CHAMPAIGN	103	53
		CONTRACT NO. 70944		
		ILLINOIS	FED. AID PROJECT	

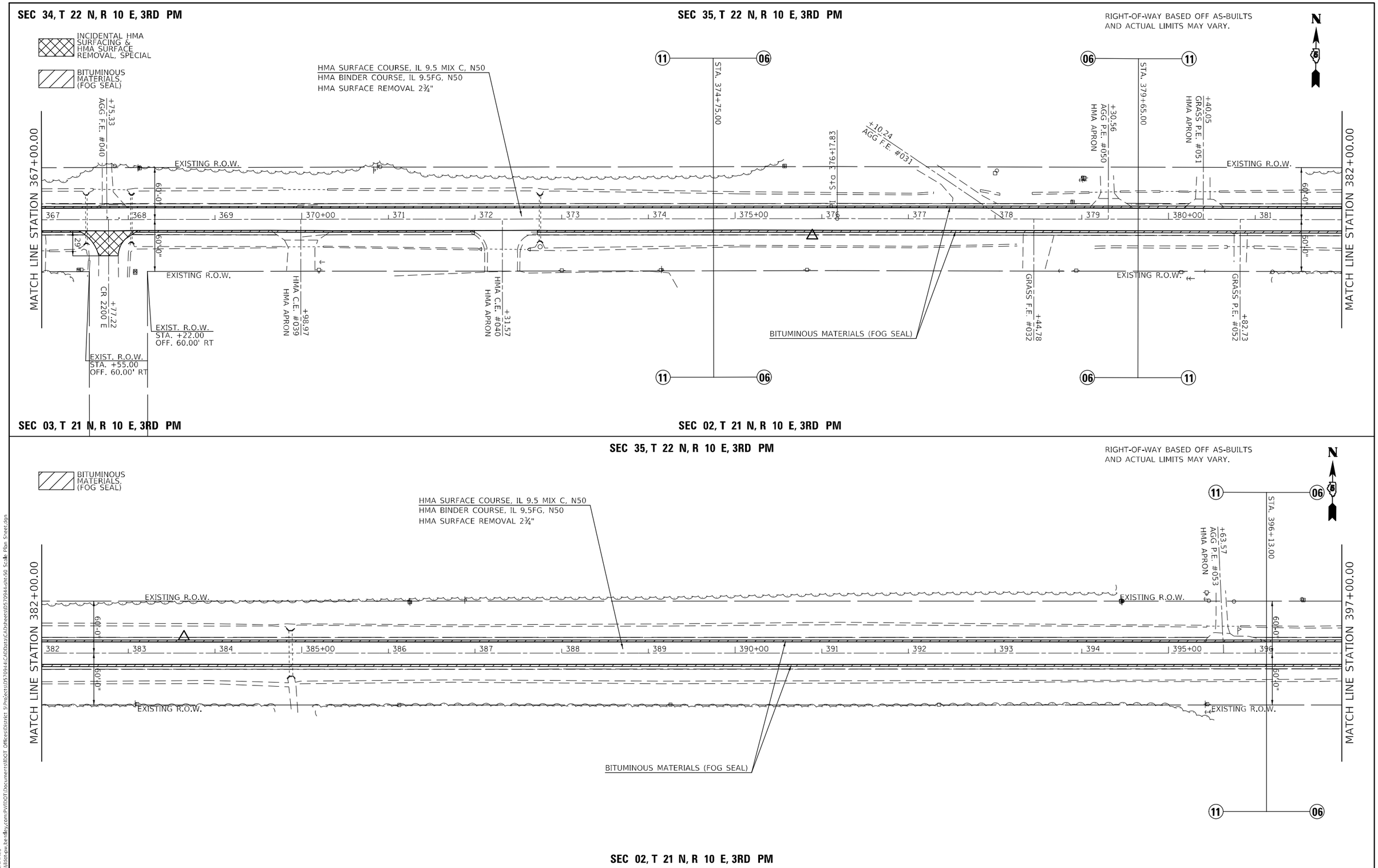

USER NAME = Tyler.Pierson	DESIGNED -	REVISED -	STATE OF ILLINOIS DEPARTMENT OF TRANSPORTATION	FAP 709 (US 136) PLAN SHEETS	F.A.P. RTE.	SECTION	COUNTY	TOTAL SHEETS	SHEET NO.
	DRAWN -	REVISED -			709	(113)RS-7	CHAMPAIGN	103	54
PLOT SCALE = 100.0000 ' / in.	CHECKED -	REVISED -					CONTRACT NO. 70944		
PLOT DATE = 1/26/2023	DATE -	REVISED -		SCALE: 1" = 50' SHEET 10 OF 11 SHEETS STA. 367+00.00 TO STA. 397+00.00			ILLINOIS FED. AID PROJECT		

MODEL: $MODELNAME$
FILE NAME: pw:\\ildot-pw.bentley.com:PWIDOT\Documents\IDOT Offices\District 5\Project\D570944\CADData\CADsheets\D570944-sht-50 Scale Plan Sheet.dgn

SEC 35, T 22 N, R 10 E, 3RD PM

RIGHT-OF-WAY BASED OFF AS-BUILTS
AND ACTUAL LIMITS MAY VARY.

N

BITUMINOUS MATERIALS, (FOG SEAL)

06 11

STA. 398+18.00

+34.49
AGG F.E. #033

PI Sta 398+81.68

HMA SURFACE COURSE, IL 9.5 MIX C, N50
HMA BINDER COURSE, IL 9.5FG, N50
HMA SURFACE REMOVAL 2¾"

STA. 403+82.00

+41.91
GRASS F.E. #036

EXIST. R.O.W.
STA. +49.00
OFF. 60.00' LT

EXIST. R.O.W.
STA. +49.00
OFF. 40.00' LT

MATCH LINE STATION 397+00.00

MATCH LINE STATION 412+00.00

EXISTING R.O.W.

60'-0"

397 398 399 400+00 401 402 403 404 405+00 406 407 408 409 410+00 411

40'-0"

AGG P.E. #054
HMA APRON
+43.59

AGG P.E. #055
HMA APRON
+52.98

GRASS F.E. #034
+09.07

BITUMINOUS MATERIALS (FOG SEAL)

GRASS F.E. #035
+16.84

SEC 02, T 21 N, R 10 E, 3RD PM

SEC 35, T 22 N, R 10 E, 3RD PM

SEC 36, T 22 N, R 10 E, 3RD PM

RIGHT-OF-WAY BASED OFF AS-BUILTS
AND ACTUAL LIMITS MAY VARY.

N

INCIDENTAL HMA SURFACING & HMA SURFACE REMOVAL, SPECIAL

BITUMINOUS MATERIALS, (FOG SEAL)

HMA SURFACE COURSE, IL 9.5 MIX C, N50
HMA BINDER COURSE, IL 9.5FG, N50
HMA SURFACE REMOVAL 2¾"

EXIST. R.O.W.
STA. +00.00
OFF. 40.00' LT

+73.30
MAIN STREET

06

STA. 423+00.00

END SECTION
(113)RS-7
STA. 423+00.00

+92.23
N WEST ST

+62.65
AGG C.E. #041
HMA APRON

+80.57
AGG C.E. #043
HMA APRON

65'

93'

PI Sta 426+29.89

MATCH LINE STATION 412+00.00

EXISTING R.O.W.

40'-0"

412 413 414 415+00 416 417 418 419 420+00 421 422 423 424 425+00 426

60'-0"

48'

29'

92'

EILER DR
+77.90

EXIST. R.O.W.
STA. +40.00
OFF. 40.00' RT

EXIST. R.O.W.
STA. +40.00
OFF. 60.00' RT

BITUMINOUS MATERIALS (FOG SEAL)

N WEST ST
+94.93

AGG UTILITY #005
+59.27

PCC C.E. #042
PCC APRON
RELOCATED
+79.34

ENTRANCE REMOVED
+66.32

AGG C.E. #044
HMA APRON
+32.14

PCC C.E. #045
PCC APRON
+53.54

PCC C.E. #046
HMA APRON
+22.64

EXIST. R.O.W.
STA. +85.00
OFF. 40.00' RT

EXIST. R.O.W.
STA. +35.00
OFF. 40.00' RT

EXIST. R.O.W.
STA. +00.00
OFF. 40.00' RT

MAIN STREET
+71.95

06

SEC 02, T 21 N, R 10 E, 3RD PM

SEC 01, T 21 N, R 10 E, 3RD PM

MODEL: $MODELNAME$
FILE NAME: pw:\\ildot-pw.bentley.com:PWIDOT\Documents\IDOT Offices\District 5\Project\D570944\CADData\CADsheets\D570944-sht-50 Scale Plan Sheet.dgn

USER NAME = Tyler.Pierson	DESIGNED -	REVISED -	STATE OF ILLINOIS DEPARTMENT OF TRANSPORTATION
	DRAWN -	REVISED -	
PLOT SCALE = 100.0000 ' / in.	CHECKED -	REVISED -	
PLOT DATE = 1/26/2023	DATE -	REVISED -	

FAP 709 (US 136) PLAN SHEETS

SCALE: 1" = 50' | SHEET 11 OF 11 SHEETS | STA. 397+00.00 TO STA. 426+29.89

F.A.P. RTE.	SECTION	COUNTY	TOTAL SHEETS	SHEET NO.
709	(113)RS-7	CHAMPAIGN	103	55
		CONTRACT NO. 70944		
		ILLINOIS FED. AID PROJECT		

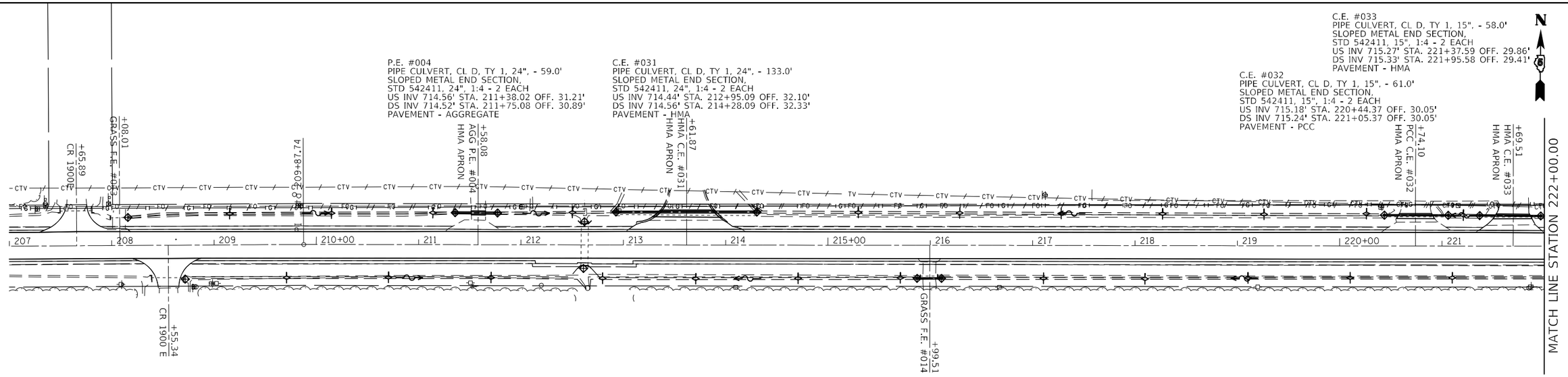

F.E. #014
PIPE CULVERT, CL D, TY 1, 18", - 21.0'
SLOPED METAL END SECTION,
STD 542411, 18", 1:4 - 2 EACH
US INV 714.39' STA. 215+88.64 OFF. 32.30'
DS INV 714.41' STA. 216+09.65 OFF. 32.26'
PAVEMENT - AGGREGATE

LEGEND

- INLET AND PIPE PROTECTION
- TEMPORARY DITCH CHECK
- SLOPED METAL END SECTION

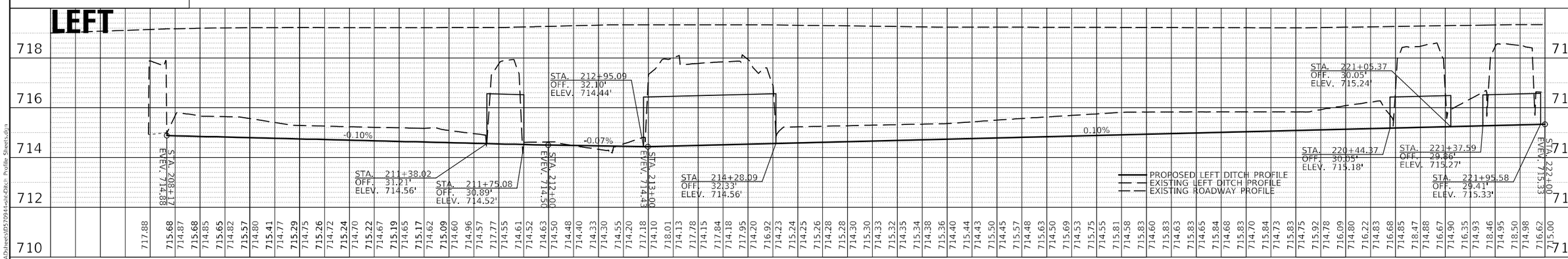

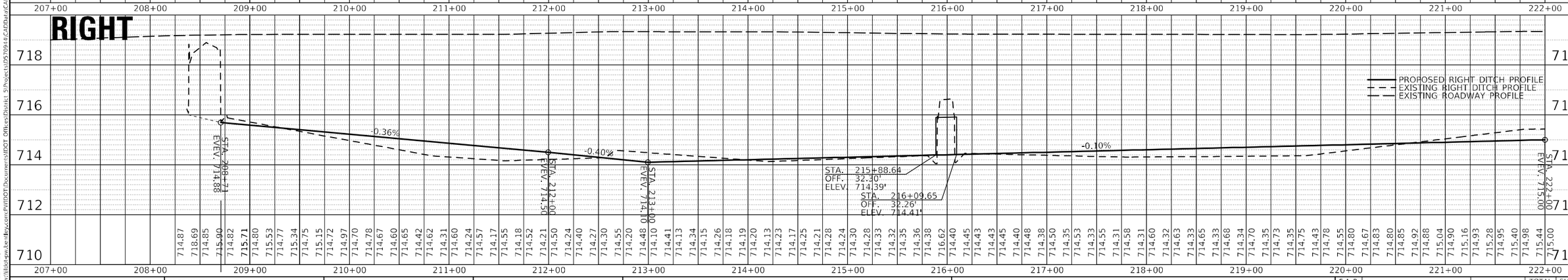

USER NAME = Tyler.Pierson	DESIGNED -	REVISED -	
	CHECKED -	REVISED -	
PLOT SCALE = 100.0000 ' / in.	DRAWN -	REVISED -	
PLOT DATE = 1/26/2023	CHECKED -	REVISED -	

STATE OF ILLINOIS
DEPARTMENT OF TRANSPORTATION

FAP 709 (US 136) DRAINAGE
PLAN & PROFILE SHEETS

SCALE: 1" = 50' | SHEET 1 OF 4 SHEETS | STA. 207+00.00 TO STA. 222+00.00

F.A.P. RTE.	SECTION	COUNTY	TOTAL SHEETS	SHEET NO.
709	(113)RS-7	CHAMPAIGN	103	56
		CONTRACT NO. 70944		
		ILLINOIS FED. AID PROJECT		

PLAN — NOTE BOOK NO.____ — SURVEYED / PLOTTED / ALIGNMENT CHECKED / R.O.W. CHECKED / CADD FILE NAME — BY — DATE

PROFILE — NOTE BOOK NO.____ — SURVEYED / PLOTTED / GRADES CHECKED / B.M. NOTED / STRUCTURE NOTATIONS CHKD — BY — DATE

MODEL: $MODELNAME$
FILE NAME: pw:\\ildot-pw.bentley.com:PWIDOT\Documents\IDOT Offices\District 5\Projects\D570944\CADData\CADsheets\D570944-sht-Ditch Profile Sheets.dgn

C.E. #034
PIPE CULVERT, CL D, TY 1, 18", - 61.0'
SLOPED METAL END SECTION,
STD 542411, 18", 1:4 - 2 EACH
US INV 715.63' STA. 224+25.69 OFF. 29.15'
DS INV 715.72' STA. 224+86.69 OFF. 29.06'
PAVEMENT - AGGREGATE

C.E. #035
PIPE CULVERT, CL D, TY 1, 15", - 48.0'
SLOPED METAL END SECTION,
STD 542411, 15", 1:4 - 2 EACH
US INV 715.80' STA. 225+47.94 OFF. 28.41'
DS INV 715.86' STA. 225+95.94 OFF. 30.30'
PAVEMENT - AGGREGATE

C.E. #036
PIPE CULVERT, CL D, TY 1, 15", - 69.0'
SLOPED METAL END SECTION,
STD 542411, 15", 1:4 - 2 EACH
US INV 715.90' STA. 226+24.43 OFF. 30.08'
DS INV 715.99' STA. 226+93.45 OFF. 28.70'
PAVEMENT - PCC

C.E. #037
PIPE CULVERT, CL D, TY 1, 24", - 46.0'
SLOPED METAL END SECTION,
STD 542411, 24", 1:4 - 2 EACH
US INV 717.17' STA. 228+29.72 OFF. 28.68'
DS INV 717.59' STA. 228+75.72 OFF 26.92'
PAVEMENT - HMA

C.E. #038
PIPE CULVERT, CL D, TY 1, 18" ERS, - 42.0'
SLOPED METAL END SECTION,
STD 542416, 24", 1:4 - 2 EACH
US INV 718.08' STA. 230+38.31 OFF. 26.00'
DS INV 718.16' STA. 230+40.31 OFF. 26.99'
PAVEMENT - HMA

P.E. #005
PIPE CULVERT, CL D, TY 1, 24" ERS, - 25.0'
SLOPED METAL END SECTION,
STD 542416, 24", 1:4 - 2 EACH
US INV 718.31' STA. 231+56.14 OFF. 26.77'
DS INV 718.36' STA. 231+81.12 OFF. 26.60'
PAVEMENT - AGGREGATE

P.E. #006
PIPE CULVERT, CL D, TY 1, 15", - 33.0'
SLOPED METAL END SECTION,
STD 542411, 15", 1:4 - 2 EACH
US INV 718.59' STA. 232+93.03 OFF. 27.26'
DS INV 718.65' STA. 233+26.05 OFF. 28.24'
PAVEMENT - AGGREGATE

P.E. #007
PIPE CULVERT, CL D, TY 1, 18", - 24.0'
SLOPED METAL END SECTION,
STD 542411, 18", 1:4 - 2 EACH
US INV 718.89' STA. 234+47.07 OFF. 27.37'
DS INV 718.94' STA. 234+71.07 OFF. 27.41'
PAVEMENT - HMA

P.E. #008
PIPE CULVERT, CL D, TY 1, 15", - 24.0'
SLOPED METAL END SECTION,
STD 542411, 15", 1:4 - 2 EACH
US INV 719.02' STA. 235+07.37 OFF. 26.77'
DS INV 719.06' STA. 235+31.34 OFF. 27.49'
PAVEMENT - AGGREGATE

P.E. #010
PIPE CULVERT, CL D, TY 1, 15", - 23.0'
SLOPED METAL END SECTION,
STD 542411, 15", 1:4 - 2 EACH
US INV 719.18' STA. 236+15.21 OFF. 27.22'
DS INV 719.14' STA. 236+38.22 OFF 25.28'
PAVEMENT - AGGREGATE

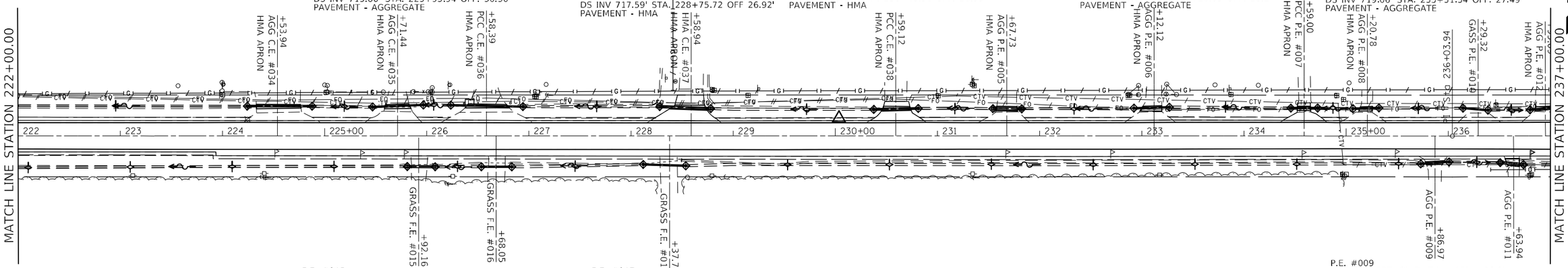

F.E. #015
PIPE CULVERT, CL D, TY 1, 24", - 23.0'
SLOPED METAL END SECTION,
STD 542411, 24", 1:4 - 2 EACH
US INV 715.77' STA. 225+83.02 OFF. 29.99'
DS INV 715.81' STA. 226+06.03 OFF. 30.10'
PAVEMENT - AGGREGATE

F.E. #016
PIPE CULVERT, CL D, TY 1, 15", - 28.0'
SLOPED METAL END SECTION,
STD 542411, 15", 1:4 - 2 EACH
US INV 715.91' STA. 226+54.48 OFF. 30.13'
DS INV 715.97' STA. 226+82.52 OFF. 30.15'
PAVEMENT - AGGREGATE

F.E. #017
PIPE CULVERT, CL D, TY 1, 15", - 40.0'
SLOPED METAL END SECTION,
STD 542411, 15", 1:4 - 2 EACH
US INV 717.02' STA. 228+12.96 OFF. 27.85'
DS INV 717.38' STA. 228+52.96 OFF. 29.13'
PAVEMENT - AGGREGATE

P.E. #009
PIPE CULVERT, CL D, TY 1, 15", - 26.0'
SLOPED METAL END SECTION,
STD 542411, 15", 1:4 - 2 EACH
US INV 719.15' STA. 235+73.99 OFF. 27.03'
DS INV 719.20' STA. 235+99.99 OFF. 25.30'
PAVEMENT - AGGREGATE

P.E. #011
PIPE CULVERT, CL D, TY 1, 24" ERS, - 20.0'
SLOPED METAL END SECTION,
STD 542416, 24", 1:4 - 2 EACH
US INV 719.09' STA. 236+52.57 OFF. 26.08'
DS INV 719.05' STA. 236+72.47 OFF. 28.04'
PAVEMENT - AGGREGATE

LEGEND

- INLET AND PIPE PROTECTION
- TEMPORARY DITCH CHECK
- SLOPED METAL END SECTION

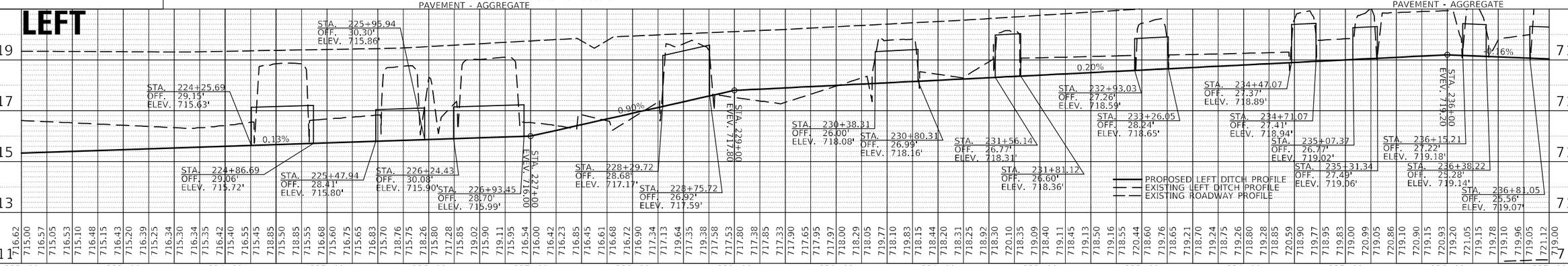

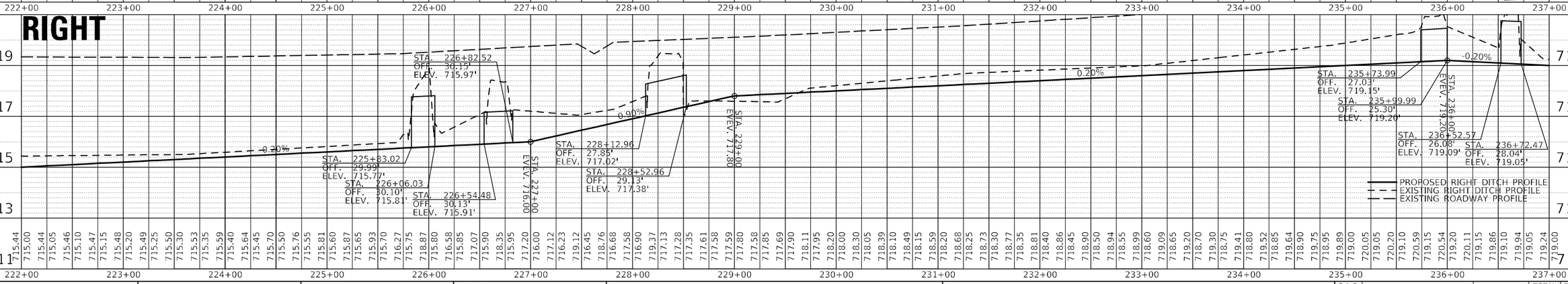

USER NAME = Tyler.Pierson	DESIGNED -	REVISED -	
	CHECKED -	REVISED -	
PLOT SCALE = 100.0000 ' / in.	DRAWN -	REVISED -	
PLOT DATE = 1/26/2023	CHECKED -	REVISED -	

STATE OF ILLINOIS
DEPARTMENT OF TRANSPORTATION

FAP 709 (US 136) DRAINAGE
PLAN & PROFILE SHEETS

SCALE: 1" = 50' | SHEET 2 OF 4 SHEETS | STA. 222+00.00 TO STA. 237+00.00

F.A.P. RTE.	SECTION	COUNTY	TOTAL SHEETS	SHEET NO.
709	(113)RS-7	CHAMPAIGN	103	57
		CONTRACT NO. 70944		
		ILLINOIS	FED. AID PROJECT	

PLAN
SURVEYED
PLOTTED
ALIGNMENT CHECKED
R/ OF WAY CHECKED
CADD FILE NAME
NOTE BOOK NO.
DATE

PROFILE
SURVEYED
PLOTTED
GRADES CHECKED
B.M. NOTED
STRUCTURE NOTATIONS CHKD
NOTE BOOK NO.
BY
DATE

MODEL: $MODELNAME$
FILE NAME: pw:\\ildot-pw.bentley.com:PWIDOT\Documents\IDOT Offices\District 5\Projects\D570944\CAD\Data\CAD-Sheets\D570944-sht-Ditch Profile Sheets.dgn

P.E. #013
PIPE CULVERT, CL D, TY 1, 18", - 26.0'
SLOPED METAL END SECTION,
STD 542411, 18", 1:4 - 2 EACH
US INV 718.89' STA. 237+97.18 OFF. 28.20'
DS INV 718.85' STA. 238+23.18 OFF. 29.00'
PAVEMENT - PCC

P.E. #016
PIPE CULVERT, CL D, TY 1, 15", - 23.0'
SLOPED METAL END SECTION,
STD 542411, 15", 1:4 - 2 EACH
US INV 718.56' STA. 240+04.27 OFF. 29.59'
DS INV 718.51' STA. 240+37.20 OFF. 29.16'
PAVEMENT - PCC

P.E. #019
PIPE CULVERT, CL D, TY 1, 15", - 35.0'
SLOPED METAL END SECTION,
STD 542411, 15", 1:4 - 2 EACH
US INV 718.43' STA. 242+47.60 OFF. 29.57'
DS INV 718.57' STA. 242+82.60 OFF. 28.78'
PAVEMENT - HMA

P.E. #012
PIPE CULVERT, CL D, TY 1, 15", - 29.0'
SLOPED METAL END SECTION,
STD 542411, 15", 1:4 - 2 EACH
US INV 719.07' STA. 236+81.05 OFF. 25.56'
DS INV 719.03' STA. 237+09.96 OFF. 28.56'
PAVEMENT - AGGREGATE

P.E. #015
PIPE CULVERT, CL D, TY 1, 15", - 32.0'
SLOPED METAL END SECTION,
STD 542411, 15", 1:4 - 2 EACH
US INV 718.73' STA. 238+98.91 OFF. 28.93'
DS INV 718.68' STA. 239+30.91 OFF. 29.41'
PAVEMENT - PCC

P.E. #018
PIPE CULVERT, CL D, TY 1, 15", - 33.0'
SLOPED METAL END SECTION,
STD 542411, 15", 1:4 - 2 EACH
US INV 718.38' STA. 241+18.42 OFF. 30.48'
DS INV 718.33' STA. 241+51.45 OFF. 30.73'
PAVEMENT - PCC

P.E. #022
PIPE CULVERT, CL D, TY 1, 15", - 35.0'
SLOPED METAL END SECTION,
STD 542411, 15", 1:4 - 2 EACH
US INV 719.22' STA. 244+52.74 OFF. 28.28'
DS INV 719.36' STA. 244+87.98 OFF. 28.39'
PAVEMENT - HMA

F.E. #018
PIPE CULVERT, CL D, TY 1, 18", - 31.0'
SLOPED METAL END SECTION,
STD 542411, 18", 1:4 - 2 EACH
US INV 720.34' STA. 247+42.15 OFF. 27.89'
DS INV 720.44' STA. 247+73.15 OFF. 27.88'
PAVEMENT - AGGREGATE

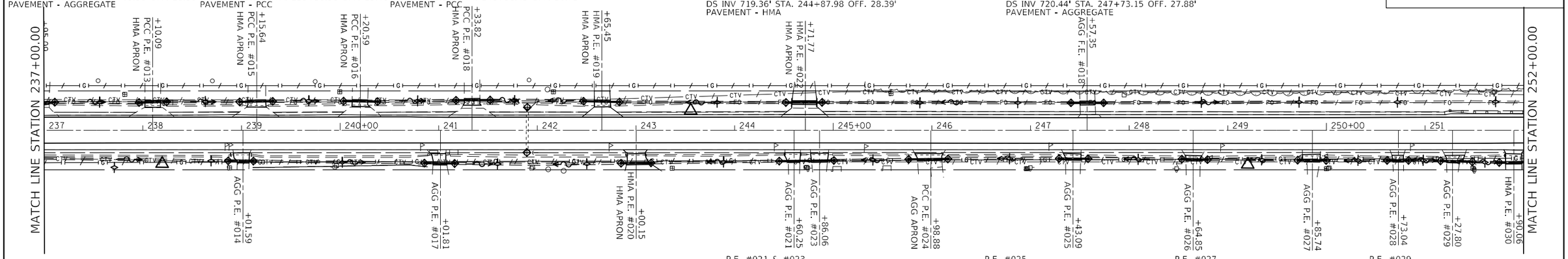

P.E. #014
PIPE CULVERT, CL D, TY 1, 24", - 23.0'
SLOPED METAL END SECTION,
STD 542411, 24", 1:4 - 2 EACH
US INV 718.62' STA. 238+88.21 OFF. 30.91'
DS INV 718.58' STA. 239+11.12 OFF. 31.17'
PAVEMENT - AGGREGATE

P.E. #017
PIPE CULVERT, CL D, TY 1, 15", - 29.0'
SLOPED METAL END SECTION,
STD 542411, 15", 1:4 - 2 EACH
US INV 718.23' STA. 240+86.64 OFF. 33.21'
DS INV 718.17' STA. 241+15.64 OFF. 33.55'
PAVEMENT - AGGREGATE

P.E. #020
PIPE CULVERT, CL D, TY 1, 15", - 29.0'
SLOPED METAL END SECTION,
STD 542411, 15", 1:4 - 2 EACH
US INV 718.37' STA. 242+85.73 OFF. 33.37'
DS INV 718.49' STA. 243+14.75 OFF. 32.99'
PAVEMENT - HMA

P.E. #021 & #023
PIPE CULVERT, CL D, TY 1, 15", - 54.0'
SLOPED METAL END SECTION,
STD 542411, 15", 1:4 - 2 EACH
US INV 719.06' STA. 244+46.06 OFF. 31.21'
DS INV 719.29' STA. 245+00.05 OFF. 30.50'
PAVEMENT - AGGREGATE

P.E. #024
PIPE CULVERT, CL D, TY 1, 15", - 38.0'
SLOPED METAL END SECTION,
STD 542411, 15", 1:4 - 2 EACH
US INV 719.62' STA. 245+77.54 OFF. 29.46'
DS INV 719.78' STA. 246+15.54 OFF. 28.96'
PAVEMENT - PCC

P.E. #025
PIPE CULVERT, CL D, TY 1, 15", - 28.0'
SLOPED METAL END SECTION,
STD 542411, 15", 1:4 - 2 EACH
US INV 720.22' STA. 247+29.66 OFF. 28.59'
DS INV 720.29' STA. 247+57.66 OFF. 28.75'
PAVEMENT - AGGREGATE

P.E. #026
PIPE CULVERT, CL D, TY 1, 15" ERS, - 25.0'
SLOPED METAL END SECTION,
STD 542415, 15", 1:4 - 2 EACH
US INV 720.55' STA. 248+53.83 OFF. 29.20'
DS INV 720.61' STA. 248+78.84 OFF. 29.70'
PAVEMENT - AGGREGATE

P.E. #027
PIPE CULVERT, CL D, TY 1, 15" ERS, - 28.0'
SLOPED METAL END SECTION,
STD 542416, 15", 1:4 - 2 EACH
US INV 720.74' STA. 249+71.32 OFF. 30.21'
DS INV 720.77' STA. 249+99.32 OFF. 30.52'
PAVEMENT - AGGREGATE

P.E. #028
PIPE CULVERT, CL D, TY 1, 15" ERS, - 21.0'
SLOPED METAL END SECTION,
STD 542415, 15", 1:4 - 2 EACH
US INV 721.06' STA. 250+61.92 OFF. 30.49'
DS INV 721.10' STA. 250+82.93 OFF. 30.47'
PAVEMENT - AGGREGATE

P.E. #029
PIPE CULVERT, CL D, TY 1, 15" ERS, - 31.0'
SLOPED METAL END SECTION,
STD 542416, 15", 1:4 - 2 EACH
US INV 721.08' STA. 251+16.26 OFF. 30.92'
DS INV 720.93' STA. 251+47.26 OFF. 31.87'
PAVEMENT - AGGREGATE

LEGEND
- INLET AND PIPE PROTECTION
- TEMPORARY DITCH CHECK
- SLOPED METAL END SECTION

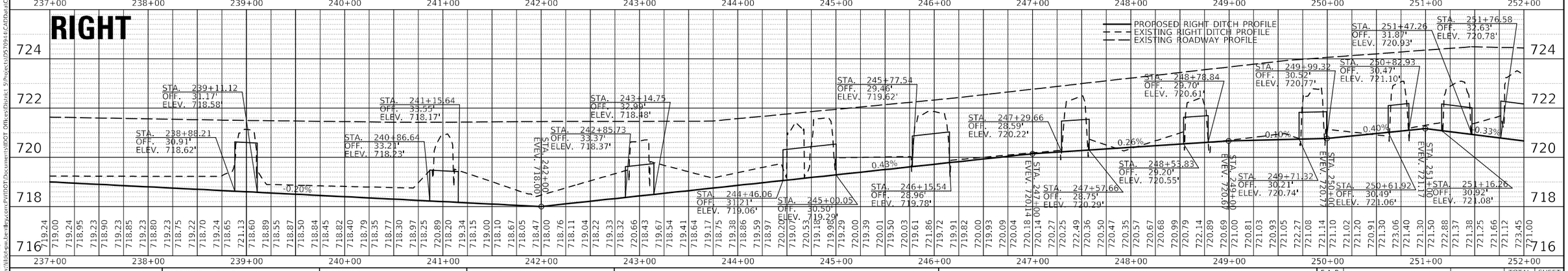

USER NAME = Tyler.Pierson	DESIGNED -	REVISED -	
	CHECKED -	REVISED -	
PLOT SCALE = 100.0000 ' / in.	DRAWN -	REVISED -	
PLOT DATE = 1/26/2023	CHECKED -	REVISED -	

STATE OF ILLINOIS
DEPARTMENT OF TRANSPORTATION

FAP 709 (US 136) DRAINAGE
PLAN & PROFILE SHEETS

SCALE: 1" = 50' | SHEET 3 OF 4 SHEETS | STA. 237+00.00 TO STA. 252+00.00

F.A.P. RTE.	SECTION	COUNTY	TOTAL SHEETS	SHEET NO.
709	(113)RS-7	CHAMPAIGN	103	58
		CONTRACT NO. 70944		
		ILLINOIS	FED. AID PROJECT	

PLAN | SURVEYED | PLOTTED | ALIGNMENT CHECKED | R/W CHECKED | CADD FILE NAME | NOTE BOOK NO. | BY | DATE

PROFILE | SURVEYED | PLOTTED | GRADES CHECKED | B.M. NOTED | STRUCTURE NOTATIONS CPND | NOTE BOOK NO. | BY | DATE

MODEL: $MODELNAME$
FILE NAME: pw:\\ildot-pw.bentley.com:PWIDOT\Documents\IDOT Offices\District 5\Projects\D570944\CADData\CADsheets\D570944-sht-Ditch Profile Sheets.dgn

LEGEND

- INLET AND PIPE PROTECTION
- TEMPORARY DITCH CHECK
- SLOPED METAL END SECTION

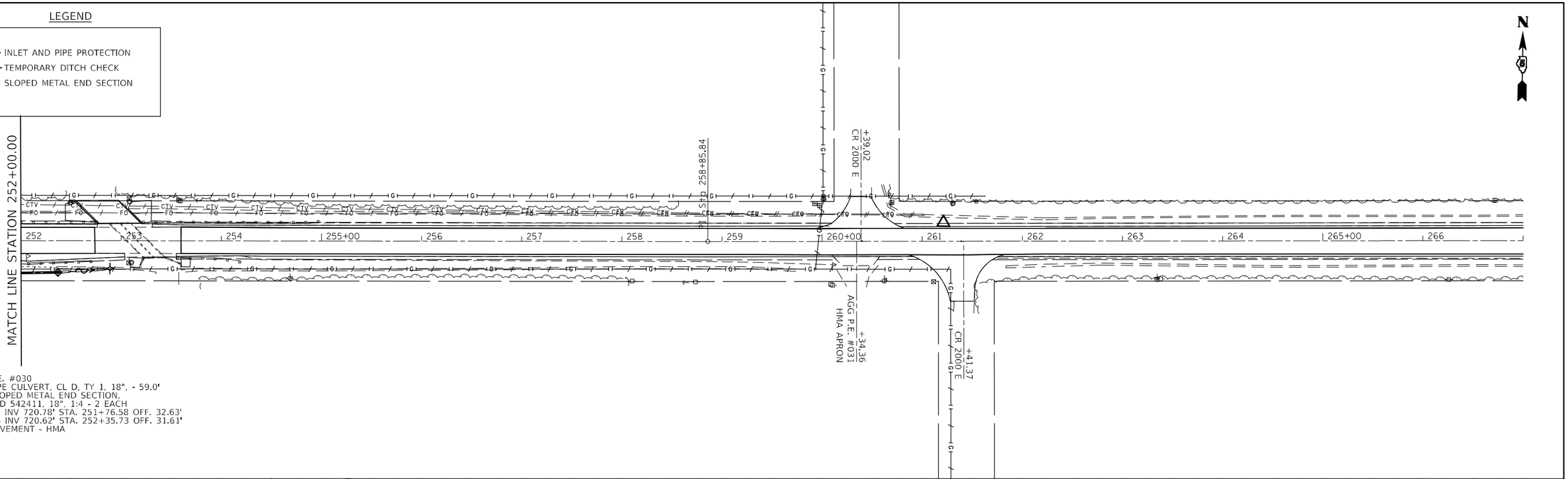

P.E. #030
PIPE CULVERT, CL D, TY 1, 18", - 59.0'
SLOPED METAL END SECTION,
STD 542411, 18", 1:4 - 2 EACH
US INV 720.78' STA. 251+76.58 OFF. 32.63'
DS INV 720.62' STA. 252+35.73 OFF. 31.61'
PAVEMENT - HMA

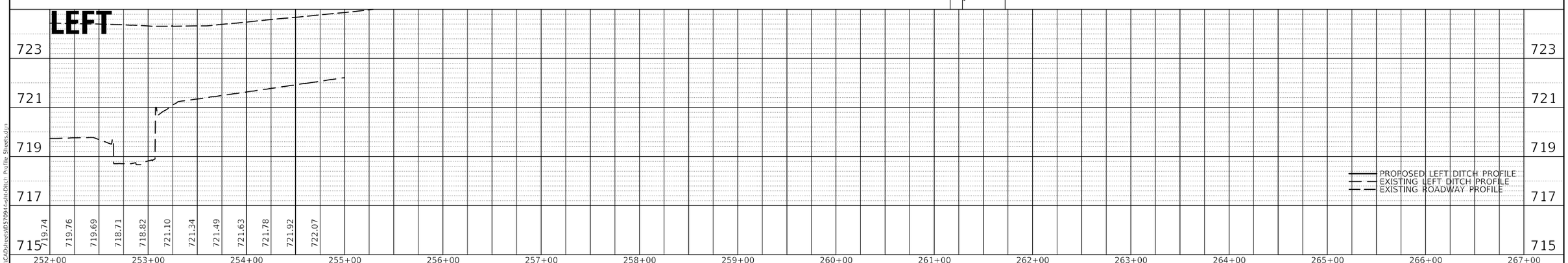

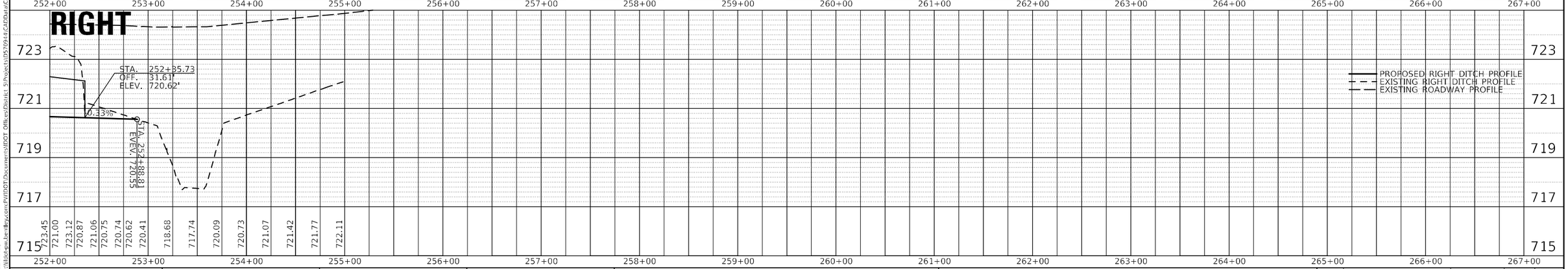

PLAN		BY	DATE
SURVEYED			
PLOTTED			
ALIGNMENT CHECKED			
R/W CHECKED			
CADD FILE NAME			
NOTE BOOK NO.			

PROFILE		BY	DATE
SURVEYED			
PLOTTED			
GRADES CHECKED			
B.M. NOTED			
STRUCTURE NOTATIONS CHKD			
NOTE BOOK NO.			

MODEL: $MODELNAME$
FILE NAME: pw:\\ildot-pw.bentley.com:PWIDOT\Documents\IDOT Offices\District 5\Projects\D570944\CADData\CADsheets\D570944-sht-Ditch Profile Sheets.dgn

USER NAME = Tyler.Pierson	DESIGNED -	REVISED -	
	CHECKED -	REVISED -	
PLOT SCALE = 100.0000 ' / in.	DRAWN -	REVISED -	
PLOT DATE = 1/26/2023	CHECKED -	REVISED -	

STATE OF ILLINOIS
DEPARTMENT OF TRANSPORTATION

FAP 709 (US 136) DRAINAGE
PLAN & PROFILE SHEETS

SCALE: 1" = 50' | SHEET 4 OF 4 SHEETS | STA. 252+00.00 TO STA. 267+00.00

F.A.P. RTE.	SECTION	COUNTY	TOTAL SHEETS	SHEET NO.
709	(113)RS-7	CHAMPAIGN	103	59
		CONTRACT NO. 70944		
		ILLINOIS	FED. AID PROJECT	

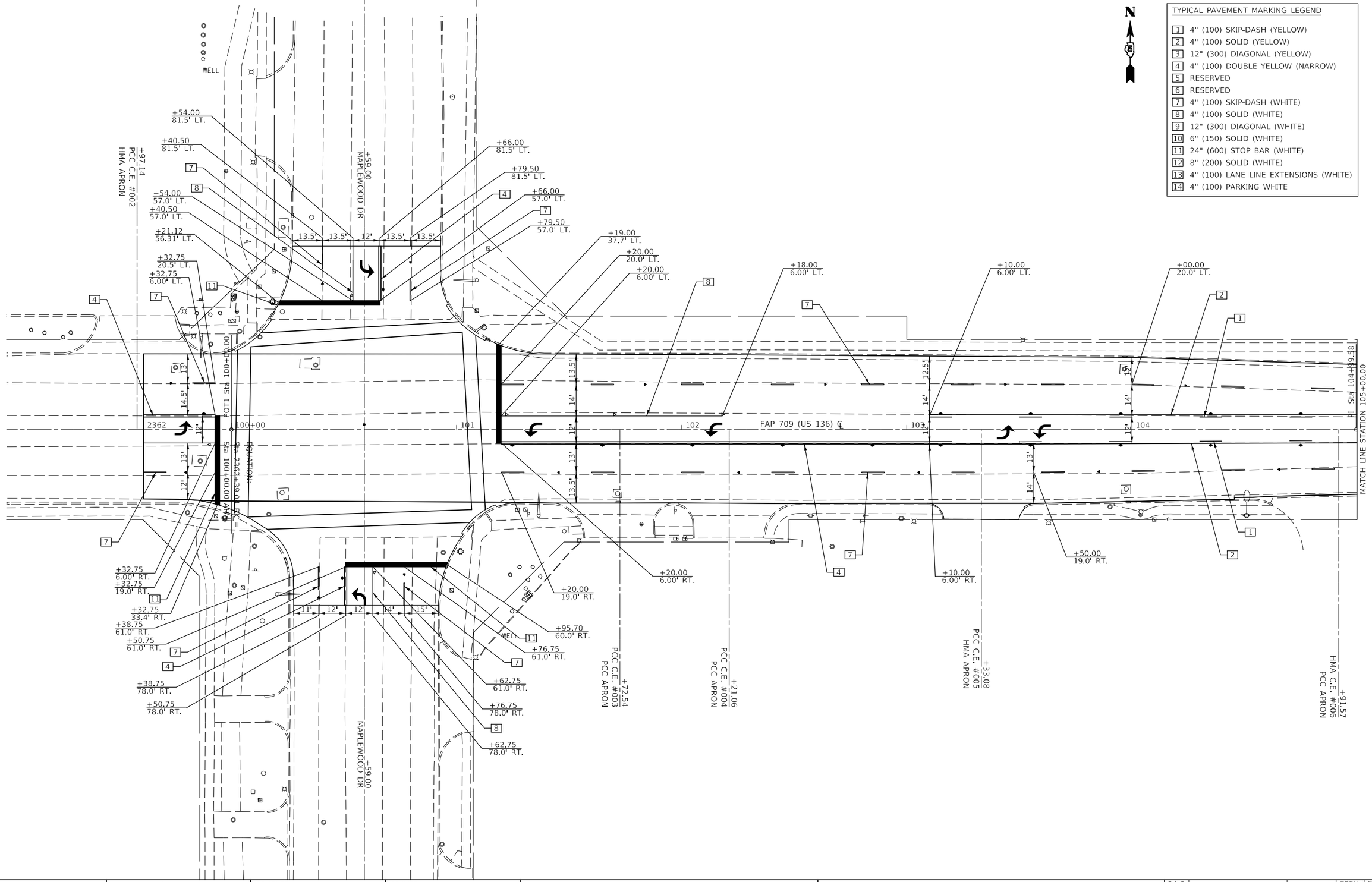

TYPICAL PAVEMENT MARKING LEGEND

1	4" (100) SKIP-DASH (YELLOW)
2	4" (100) SOLID (YELLOW)
3	12" (300) DIAGONAL (YELLOW)
4	4" (100) DOUBLE YELLOW (NARROW)
5	RESERVED
6	RESERVED
7	4" (100) SKIP-DASH (WHITE)
8	4" (100) SOLID (WHITE)
9	12" (300) DIAGONAL (WHITE)
10	6" (150) SOLID (WHITE)
11	24" (600) STOP BAR (WHITE)
12	8" (200) SOLID (WHITE)
13	4" (100) LANE LINE EXTENSIONS (WHITE)
14	4" (100) PARKING WHITE

MODEL: $MODELNAME$
FILE NAME: pw:\\ildot-pw.bentley.com:PWIDOT\Documents\IDOT Offices\District 5\Project\D570944\CADData\CADsheets\D570944-sht-Pavement Marking Plan Sheets.dgn

USER NAME = Tyler.Pierson	DESIGNED -	REVISED -
	DRAWN -	REVISED -
PLOT SCALE = 40.0000 ' / in.	CHECKED -	REVISED -
PLOT DATE = 1/26/2023	DATE -	REVISED -

STATE OF ILLINOIS
DEPARTMENT OF TRANSPORTATION

FAP 709 (US 136)
PAVEMENT MARKING PLAN SHEET DETAIL

SCALE: 1" = 20' | SHEET 1 OF 7 SHEETS | STA. 2362+00.00 TO STA. 105+00.00

F.A.P. RTE.	SECTION	COUNTY	TOTAL SHEETS	SHEET NO.
709	(113)RS-7	CHAMPAIGN	103	60
		CONTRACT NO. 70944		
		ILLINOIS	FED. AID PROJECT	

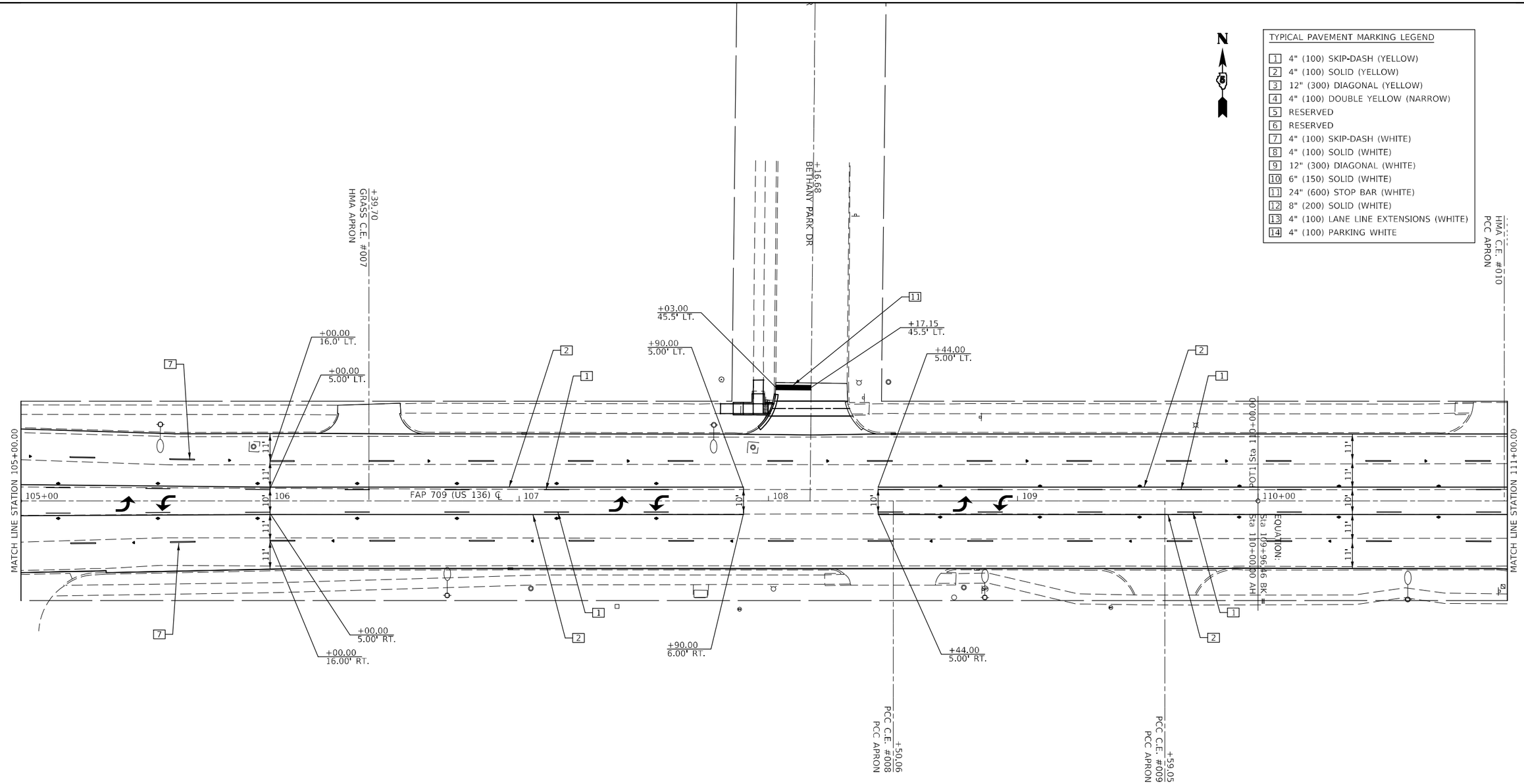

USER NAME = Tyler.Pierson	DESIGNED -	REVISED -	STATE OF ILLINOIS DEPARTMENT OF TRANSPORTATION
	DRAWN -	REVISED -	
PLOT SCALE = 40.0000 ' / in.	CHECKED -	REVISED -	
PLOT DATE = 1/26/2023	DATE -	REVISED -	

FAP 709 (US 136)
PAVEMENT MARKING PLAN SHEET DETAIL

SCALE: 1" = 20' | SHEET 2 OF 7 SHEETS | STA. 105+00.00 TO STA. 111+00.00

F.A.P. RTE.	SECTION	COUNTY	TOTAL SHEETS	SHEET NO.
709	(113)RS-7	CHAMPAIGN	103	61

CONTRACT NO. 70944

ILLINOIS | FED. AID PROJECT

MODEL: $MODELNAME$
FILE NAME: pw:\\ildot-pw.bentley.com:PWIDOT\Documents\IDOT Offices\District 5\Projects\D570944\CADData\CADsheets\D570944-sht-Pavement Marking Plan Sheets.dgn

TYPICAL PAVEMENT MARKING LEGEND

1	4" (100) SKIP-DASH (YELLOW)
2	4" (100) SOLID (YELLOW)
3	12" (300) DIAGONAL (YELLOW)
4	4" (100) DOUBLE YELLOW (NARROW)
5	RESERVED
6	RESERVED
7	4" (100) SKIP-DASH (WHITE)
8	4" (100) SOLID (WHITE)
9	12" (300) DIAGONAL (WHITE)
10	6" (150) SOLID (WHITE)
11	24" (600) STOP BAR (WHITE)
12	8" (200) SOLID (WHITE)
13	4" (100) LANE LINE EXTENSIONS (WHITE)
14	4" (100) PARKING WHITE

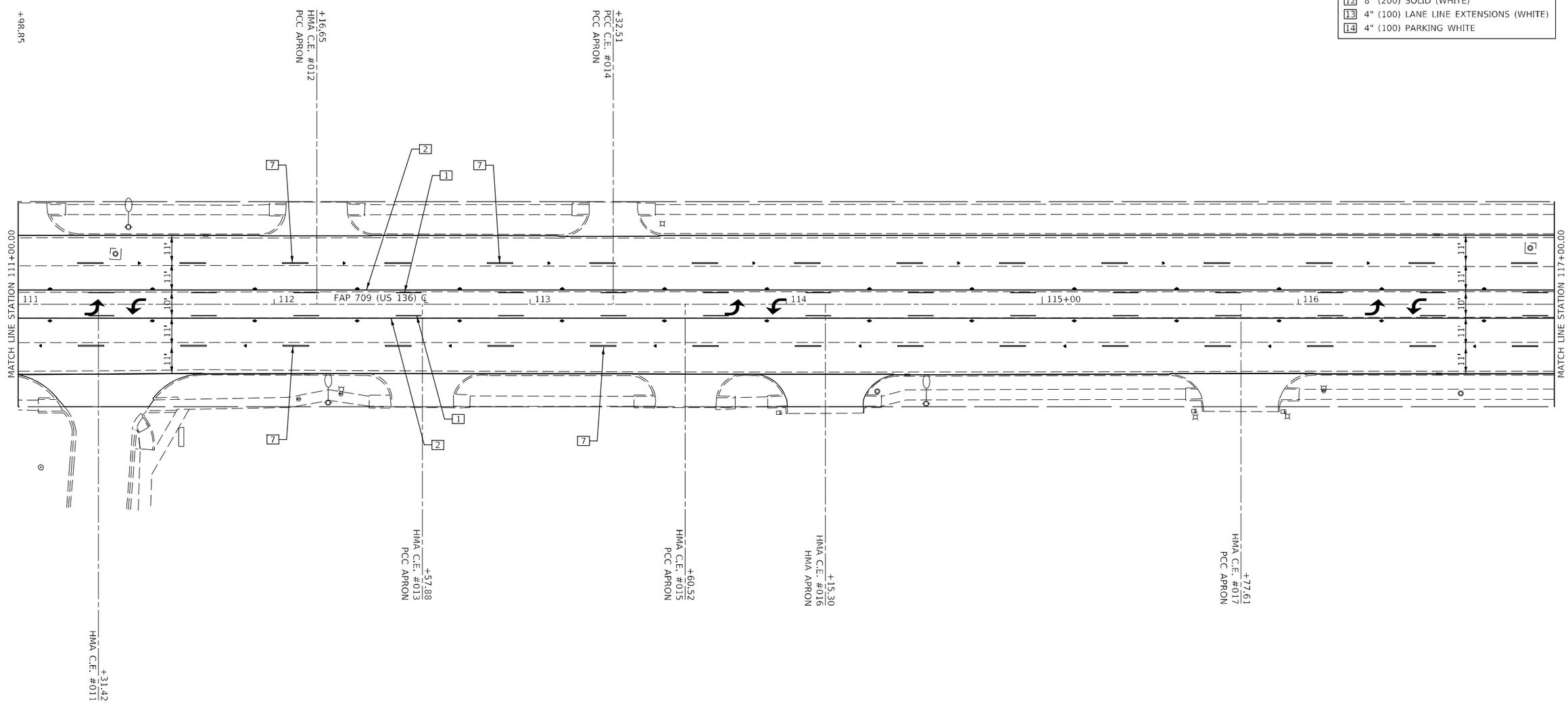

USER NAME = Tyler.Pierson	DESIGNED -	REVISED -	STATE OF ILLINOIS DEPARTMENT OF TRANSPORTATION
	DRAWN -	REVISED -	
PLOT SCALE = 40.0000 ' / in.	CHECKED -	REVISED -	
PLOT DATE = 1/26/2023	DATE -	REVISED -	

FAP 709 (US 136)
PAVEMENT MARKING PLAN SHEET DETAIL

SCALE: 1" = 20' | SHEET 3 OF 7 SHEETS | STA. 111+00.00 TO STA. 117+00.00

F.A.P. RTE.	SECTION	COUNTY	TOTAL SHEETS	SHEET NO.
709	(113)RS-7	CHAMPAIGN	103	62
		CONTRACT NO. 70944		
		ILLINOIS	FED. AID PROJECT	

MODEL: $MODEL$NAMES
FILE NAME: pw:\\ildot-pw.bentley.com:PWIDOT\Documents\IDOT Offices\District 5\Projects\D570944\CADData\CADSheets\D570944-sht-Pavement Marking Plan Sheets.dgn

NOT FOR CONSTRUCTION

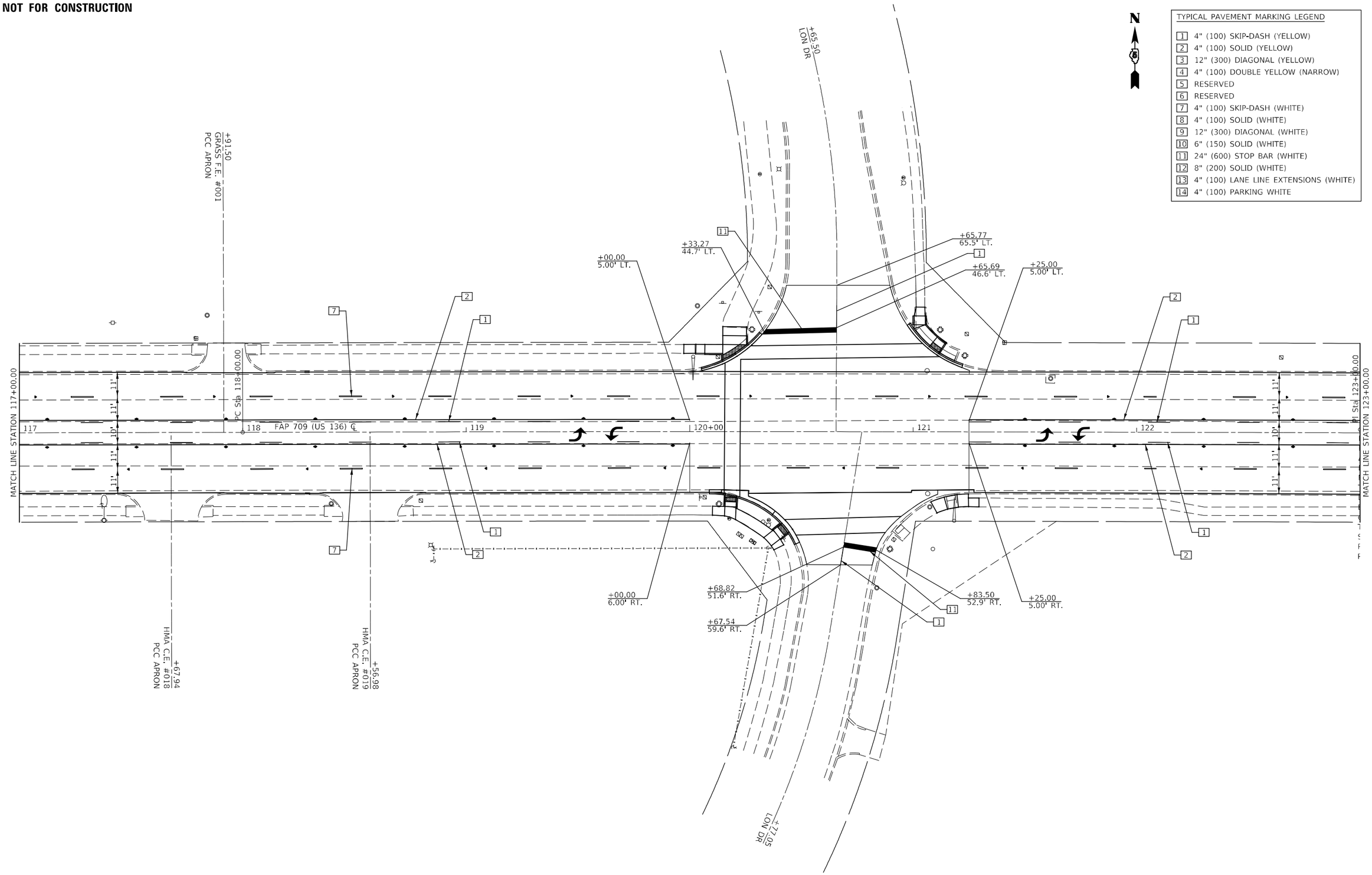

TYPICAL PAVEMENT MARKING LEGEND

1	4" (100) SKIP-DASH (YELLOW)
2	4" (100) SOLID (YELLOW)
3	12" (300) DIAGONAL (YELLOW)
4	4" (100) DOUBLE YELLOW (NARROW)
5	RESERVED
6	RESERVED
7	4" (100) SKIP-DASH (WHITE)
8	4" (100) SOLID (WHITE)
9	12" (300) DIAGONAL (WHITE)
10	6" (150) SOLID (WHITE)
11	24" (600) STOP BAR (WHITE)
12	8" (200) SOLID (WHITE)
13	4" (100) LANE LINE EXTENSIONS (WHITE)
14	4" (100) PARKING WHITE

MODEL: $MODEL$NAME$
FILE NAME: pw:\\ildot-pw.bentley.com:PWIDOT\Documents\IDOT Offices\District 5\Projects\D570944\CADData\CADSheets\D570944-sht-Pavement Marking Plan Sheets.dgn

USER NAME = Tyler.Pierson	DESIGNED -	REVISED -	
	DRAWN -	REVISED -	
PLOT SCALE = 40.0000 ' / in.	CHECKED -	REVISED -	
PLOT DATE = 1/26/2023	DATE -	REVISED -	

STATE OF ILLINOIS
DEPARTMENT OF TRANSPORTATION

FAP 709 (US 136)
PAVEMENT MARKING PLAN SHEET DETAIL

SCALE: 1" = 20' | SHEET 4 OF 7 SHEETS | STA. 117+00.00 TO STA. 123+00.00

F.A.P. RTE.	SECTION	COUNTY	TOTAL SHEETS	SHEET NO.
709	(113)RS-7	CHAMPAIGN	103	63
		CONTRACT NO. 70944		
		ILLINOIS	FED. AID PROJECT	

TYPICAL PAVEMENT MARKING LEGEND

1	4" (100) SKIP-DASH (YELLOW)
2	4" (100) SOLID (YELLOW)
3	12" (300) DIAGONAL (YELLOW)
4	4" (100) DOUBLE YELLOW (NARROW)
5	RESERVED
6	RESERVED
7	4" (100) SKIP-DASH (WHITE)
8	4" (100) SOLID (WHITE)
9	12" (300) DIAGONAL (WHITE)
10	6" (150) SOLID (WHITE)
11	24" (600) STOP BAR (WHITE)
12	8" (200) SOLID (WHITE)
13	4" (100) LANE LINE EXTENSIONS (WHITE)
14	4" (100) PARKING WHITE

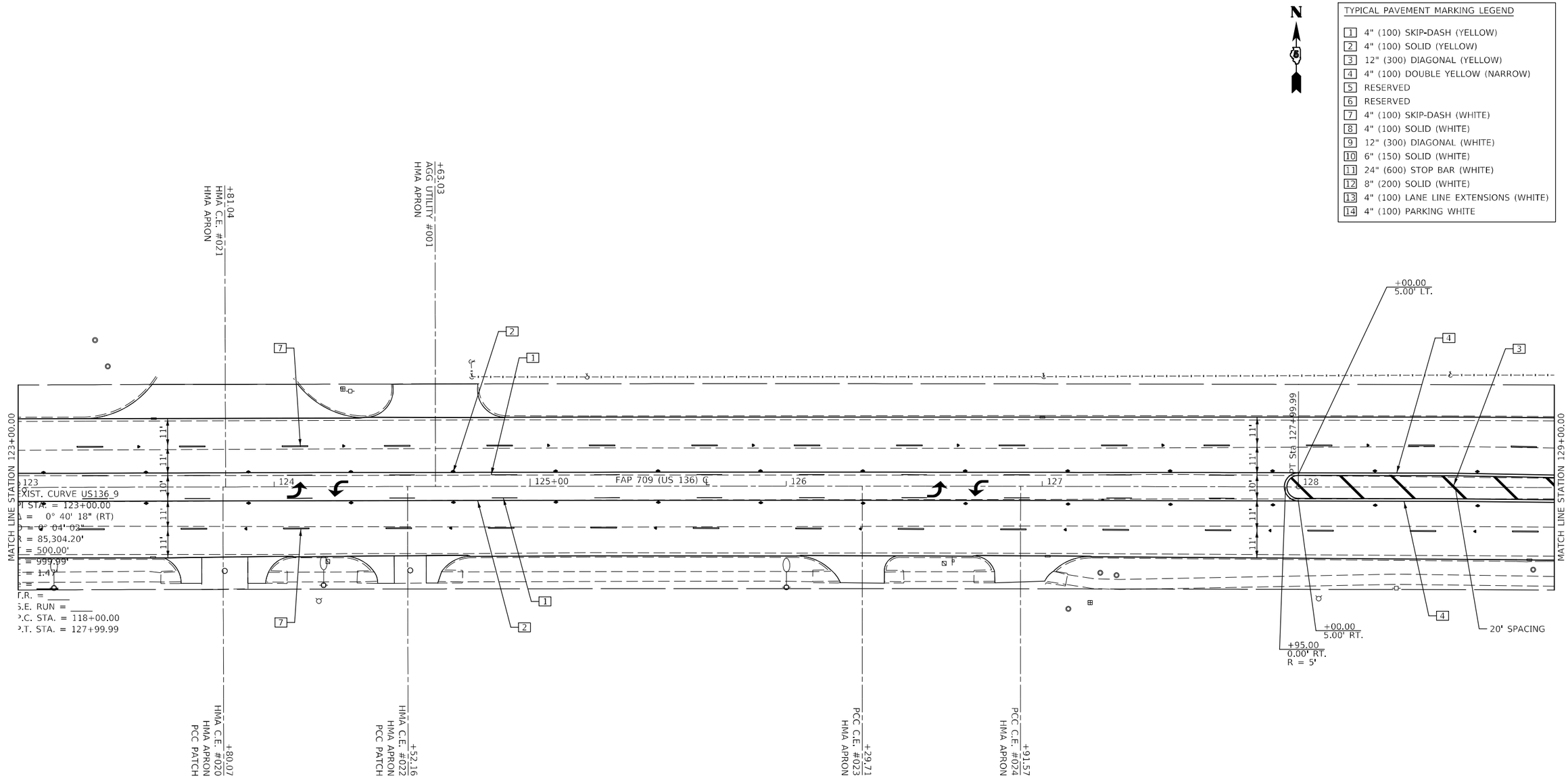

USER NAME = Tyler.Pierson	DESIGNED -	REVISED -	
	DRAWN -	REVISED -	
PLOT SCALE = 40.0000 ' / in.	CHECKED -	REVISED -	
PLOT DATE = 1/26/2023	DATE -	REVISED -	

STATE OF ILLINOIS
DEPARTMENT OF TRANSPORTATION

FAP 709 (US 136)
PAVEMENT MARKING PLAN SHEET DETAIL

SCALE: 1" = 20' | SHEET 5 OF 7 SHEETS | STA. 123+00.00 TO STA. 129+00.00

F.A.P. RTE.	SECTION	COUNTY	TOTAL SHEETS	SHEET NO.
709	(113)RS-7	CHAMPAIGN	103	64
		CONTRACT NO. 70944		
		ILLINOIS	FED. AID PROJECT	

MODEL: $MODELNAME$
FILE NAME: pw:\\ildot-pw.bentley.com:PWIDOT\Documents\IDOT Offices\District 5\Projects\D570944\CADData\CADSheets\D570944-sht-Pavement Marking Plan Sheets.dgn

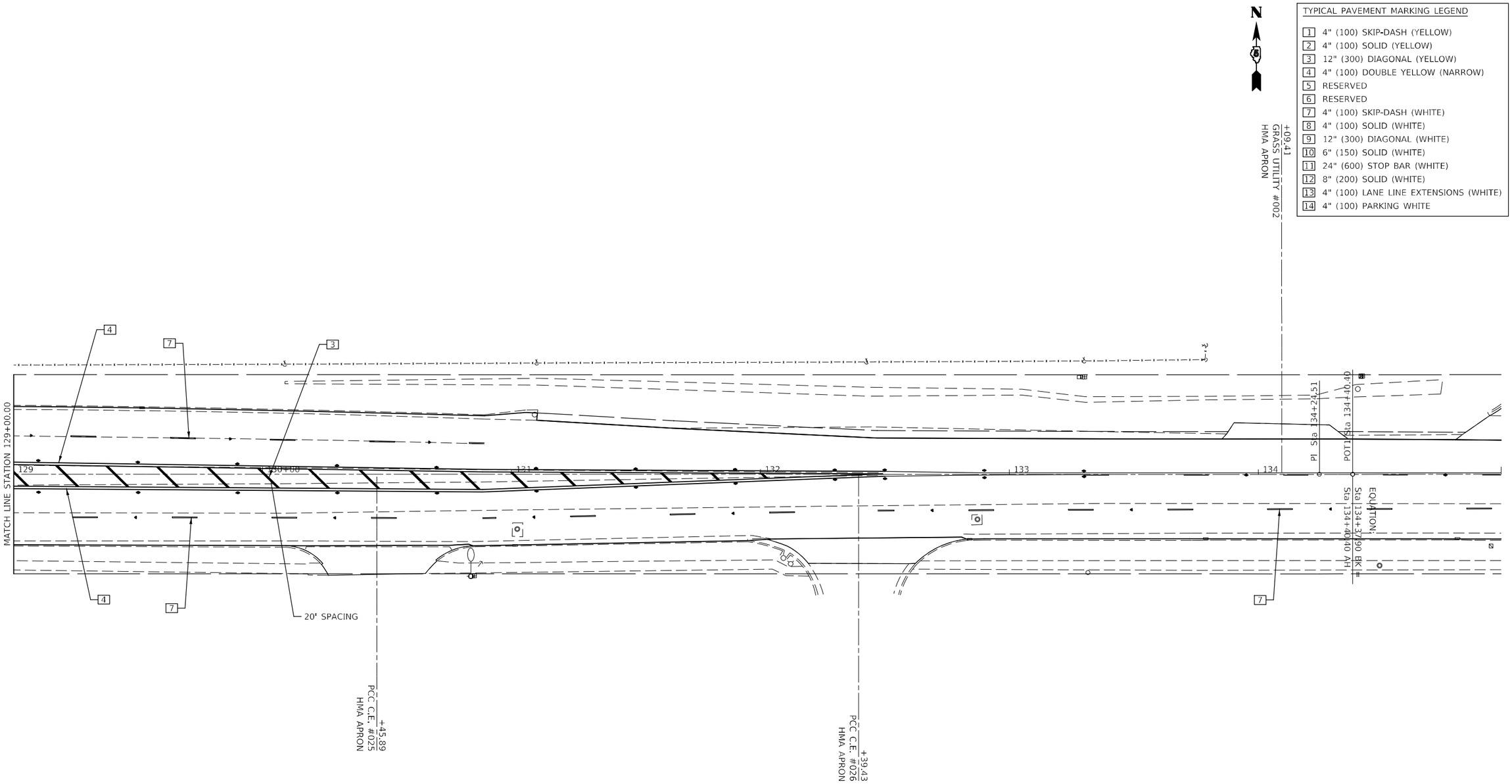

TYPICAL PAVEMENT MARKING LEGEND

1	4" (100) SKIP-DASH (YELLOW)
2	4" (100) SOLID (YELLOW)
3	12" (300) DIAGONAL (YELLOW)
4	4" (100) DOUBLE YELLOW (NARROW)
5	RESERVED
6	RESERVED
7	4" (100) SKIP-DASH (WHITE)
8	4" (100) SOLID (WHITE)
9	12" (300) DIAGONAL (WHITE)
10	6" (150) SOLID (WHITE)
11	24" (600) STOP BAR (WHITE)
12	8" (200) SOLID (WHITE)
13	4" (100) LANE LINE EXTENSIONS (WHITE)
14	4" (100) PARKING WHITE

MODEL: $MODELNAME$
FILE NAME: pw:\\ildot-pw.bentley.com:PWIDOT\Documents\IDOT Offices\District 5\Projects\D570944\CADData\CADsheets\D570944-Sht-Pavement Marking Plan Sheets.dgn

USER NAME = Tyler.Pierson	DESIGNED -	REVISED -	
	DRAWN -	REVISED -	
PLOT SCALE = 40.0000 ' / in.	CHECKED -	REVISED -	
PLOT DATE = 1/26/2023	DATE -	REVISED -	

STATE OF ILLINOIS
DEPARTMENT OF TRANSPORTATION

FAP 709 (US 136)
PAVEMENT MARKING PLAN SHEET DETAIL

SCALE: 1" = 20' | SHEET 6 OF 7 SHEETS | STA. 129+00.00 TO STA. 135+00.00

F.A.P. RTE.	SECTION	COUNTY	TOTAL SHEETS	SHEET NO.
709	(113)RS-7	CHAMPAIGN	103	65
		CONTRACT NO. 70944		
		ILLINOIS	FED. AID PROJECT	

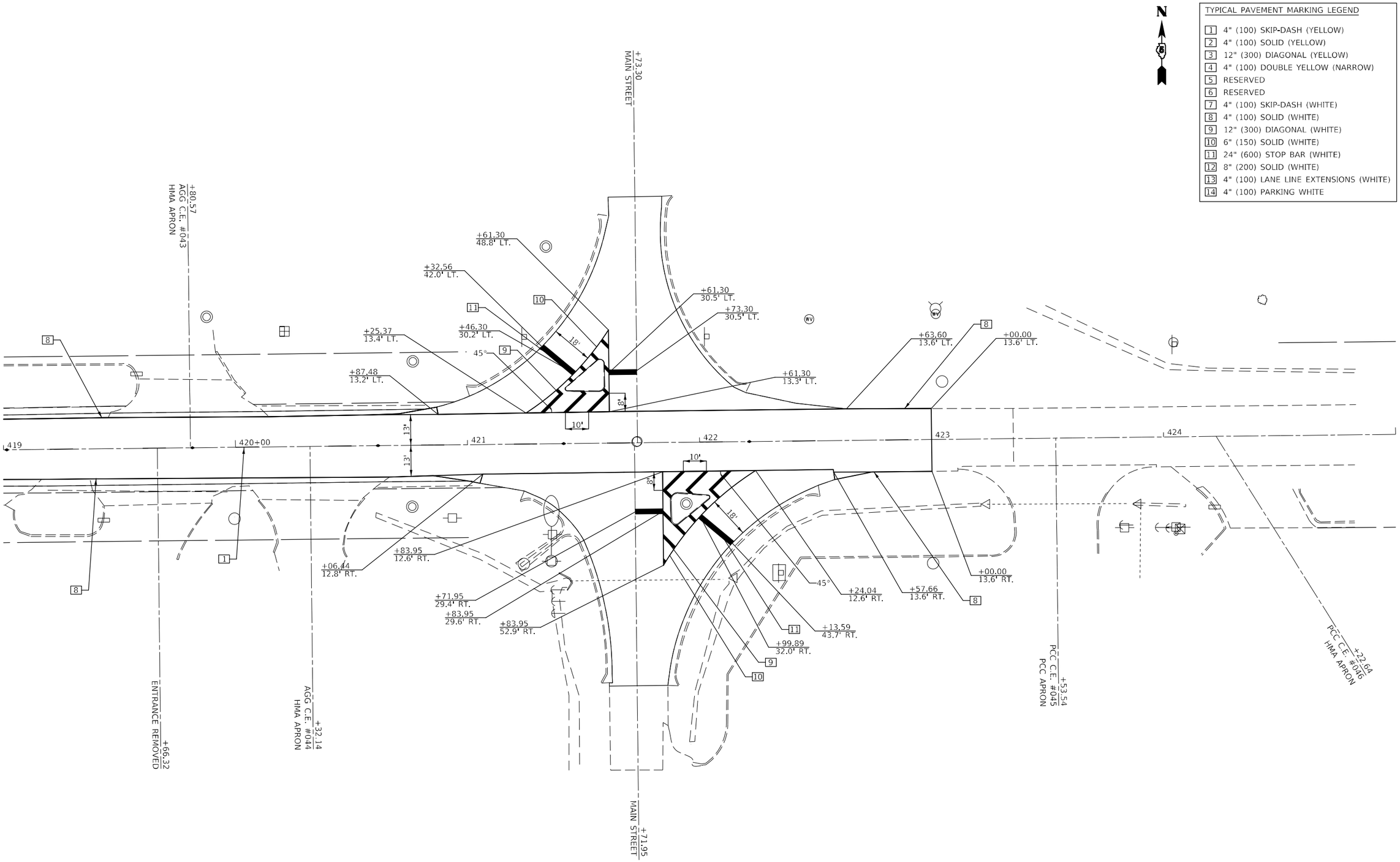

TYPICAL PAVEMENT MARKING LEGEND

1	4" (100) SKIP-DASH (YELLOW)
2	4" (100) SOLID (YELLOW)
3	12" (300) DIAGONAL (YELLOW)
4	4" (100) DOUBLE YELLOW (NARROW)
5	RESERVED
6	RESERVED
7	4" (100) SKIP-DASH (WHITE)
8	4" (100) SOLID (WHITE)
9	12" (300) DIAGONAL (WHITE)
10	6" (150) SOLID (WHITE)
11	24" (600) STOP BAR (WHITE)
12	8" (200) SOLID (WHITE)
13	4" (100) LANE LINE EXTENSIONS (WHITE)
14	4" (100) PARKING WHITE

MODEL: SMODELNAME5
FILE NAME: pw:\\illiad-pw.bentley.com:PWIDOT\Documents\IDOT Offices\District 5\Projects\D570944\CADData\CADsheets\D570944-sht-Pavement Marking Plan Sheets.dgn

USER NAME = Tyler.Pierson	DESIGNED -	REVISED -	
	DRAWN -	REVISED -	
PLOT SCALE = 40.0000 ' / in.	CHECKED -	REVISED -	
PLOT DATE = 1/26/2023	DATE -	REVISED -	

STATE OF ILLINOIS
DEPARTMENT OF TRANSPORTATION

FAP 709 (US 136)
PAVEMENT MARKING PLAN SHEET DETAIL

SCALE: 1" = 20' | SHEET 7 OF 7 SHEETS | STA. 419+00.00 TO STA. 425+00.00

F.A.P. RTE.	SECTION	COUNTY	TOTAL SHEETS	SHEET NO.
709	(113)RS-7	CHAMPAIGN	103	66
		CONTRACT NO. 70944		
		ILLINOIS	FED. AID PROJECT	

TRAFFIC SIGNAL MODERNIZATION

F.A.P. 709 (U.S. 136 / E. Grove Ave.)

&

Mapplewood Dr.

1''=20'

0' 5' 10' 15' 20' 40' 60'

N

REMOVAL

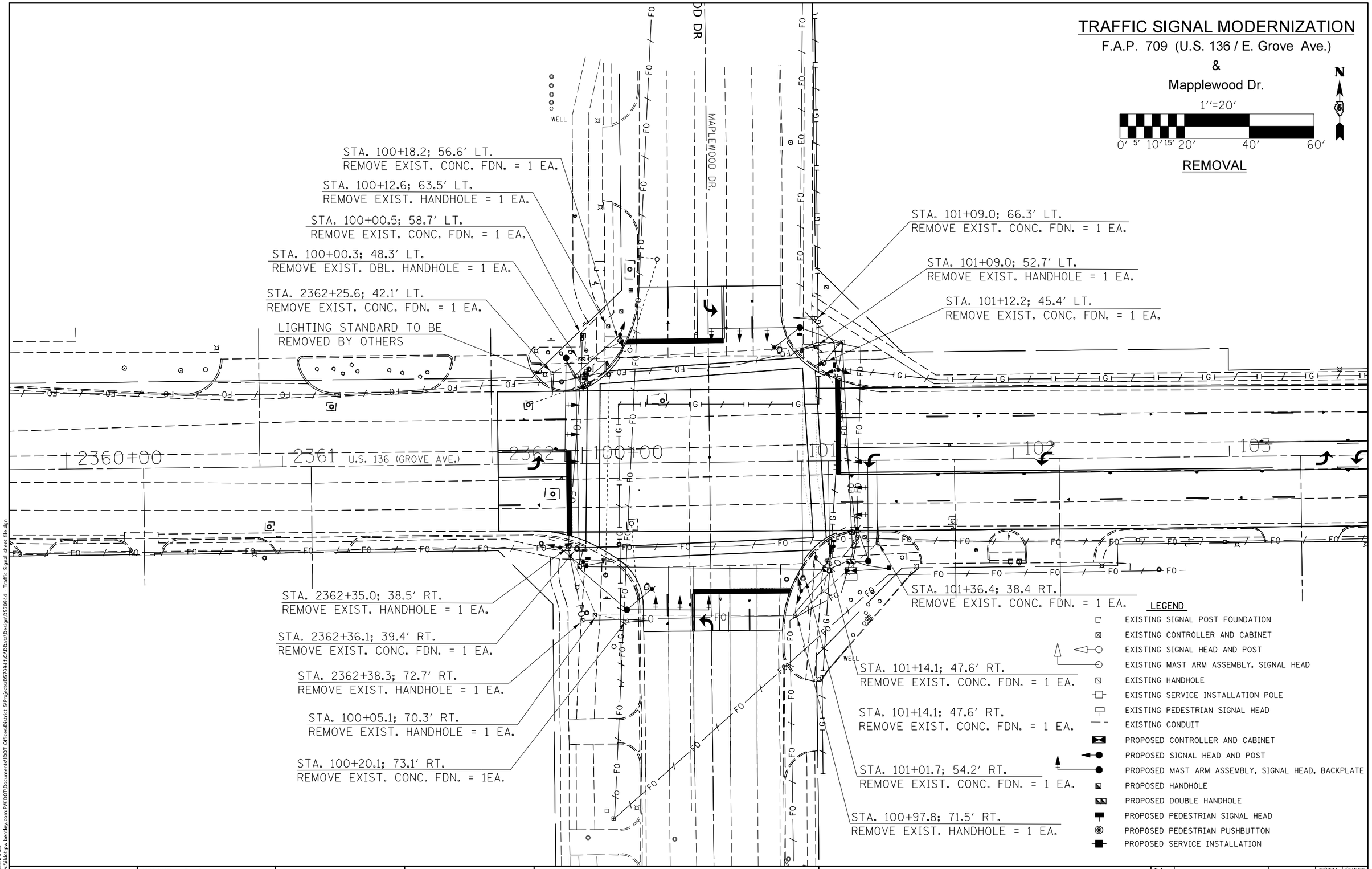

MODEL: $MODELNAME$
FILE NAME: pw:\\ildot-pw.bentley.com:PWIDOT\Documents\IDOT Offices\District 5\Projects\D570944\CADData\Design\D570944 - Traffic Signal sheet file.dgn

USER NAME = Tyler.Pierson	DESIGNED -	REVISED -	STATE OF ILLINOIS DEPARTMENT OF TRANSPORTATION
	DRAWN -	REVISED -	
PLOT SCALE = 40.0000 ' / in.	CHECKED -	REVISED -	
PLOT DATE = 1/26/2023	DATE -	REVISED -	

TRAFFIC SIGNAL MODERNIZATION
EXISTING SIGNAL REMOVAL

SCALE: SHEET OF SHEETS STA. TO STA.

F.A. RTE.	SECTION	COUNTY	TOTAL SHEETS	SHEET NO.
		CONTRACT NO.		
	ILLINOIS	FED. AID PROJECT		

TRAFFIC SIGNAL MODERNIZATION

F.A.P. 709 (U.S. 136 / E. Grove Ave.)

&

Mapplewood Dr.

1''=20'

0' 5' 10' 15' 20' 40' 60'

TRAFFIC SIGNAL LAYOUT

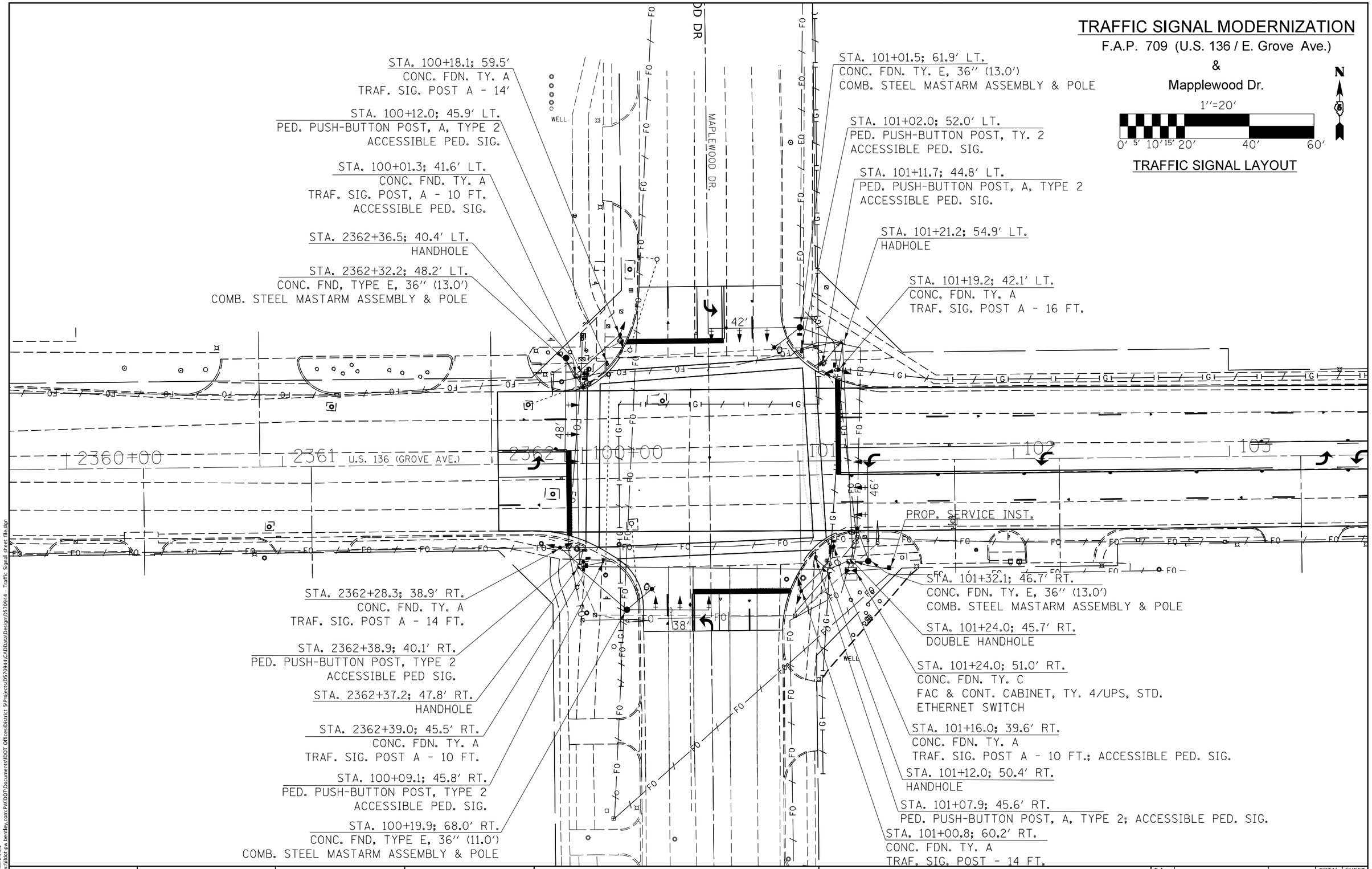

MODEL: $MODELNAMES
FILE NAME: pw:\\ildot-pw.bentley.com:PWIDOT\Documents\IDOT Offices\District 5\Projects\D570944\CADData\Design\D570944 - Traffic Signal sheet file.dgn

USER NAME = Tyler.Pierson	DESIGNED -	REVISED -	
	DRAWN -	REVISED -	
PLOT SCALE = 40.0000 ' / in.	CHECKED -	REVISED -	
PLOT DATE = 1/26/2023	DATE -	REVISED -	

STATE OF ILLINOIS
DEPARTMENT OF TRANSPORTATION

TRAFFIC SIGNAL MODERNIZATION
PROPOSED TRAFFIC SIGNAL LAYOUT

SCALE: SHEET OF SHEETS STA. TO STA.

F.A. RTE.	SECTION	COUNTY	TOTAL SHEETS	SHEET NO.
		CONTRACT NO.		
	ILLINOIS	FED. AID PROJECT		

TRAFFIC SIGNAL MODERNIZATION

F.A.P. 709 (U.S. 136 / E. Grove Ave.)

&

Mapplewood Dr.

1''=20'

0' 5' 10' 15' 20' 40' 60'

N

CONDUIT & CABLE LAYOUT

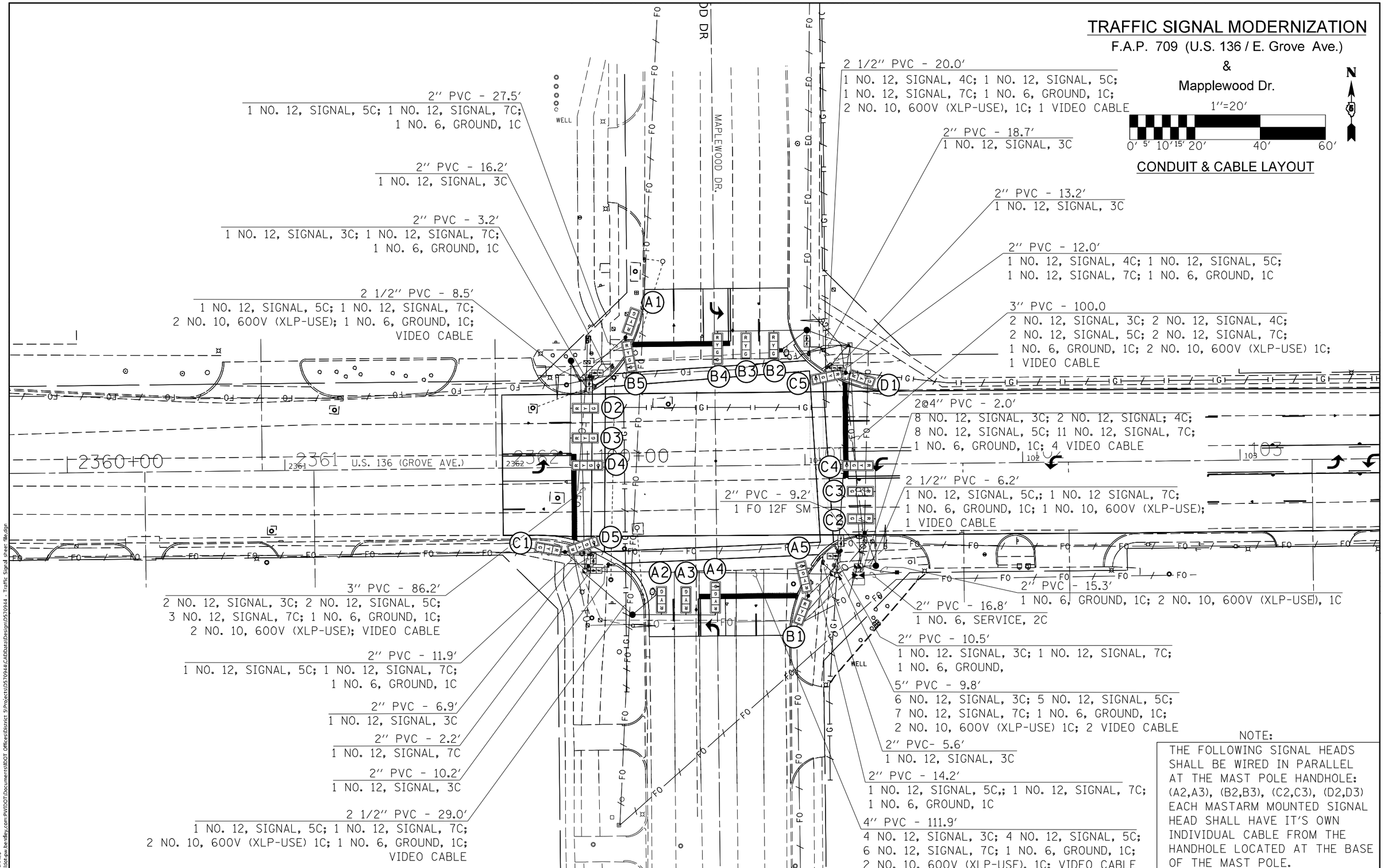

NOTE:

THE FOLLOWING SIGNAL HEADS SHALL BE WIRED IN PARALLEL AT THE MAST POLE HANDHOLE: (A2,A3), (B2,B3), (C2,C3), (D2,D3) EACH MASTARM MOUNTED SIGNAL HEAD SHALL HAVE IT'S OWN INDIVIDUAL CABLE FROM THE HANDHOLE LOCATED AT THE BASE OF THE MAST POLE.

USER NAME = Tyler.Pierson	DESIGNED -	REVISED -
	DRAWN -	REVISED -
PLOT SCALE = 40.0000 ' / in.	CHECKED -	REVISED -
PLOT DATE = 1/26/2023	DATE -	REVISED -

STATE OF ILLINOIS
DEPARTMENT OF TRANSPORTATION

TRAFFIC SIGNAL MODERNIZATION
CONDUIT & CABLE LAYOUT

SCALE: SHEET OF SHEETS STA. TO STA.

F.A. RTE.	SECTION	COUNTY	TOTAL SHEETS	SHEET NO.

CONTRACT NO.

ILLINOIS FED. AID PROJECT

MODEL: $MODELNAMES
FILE NAME: pw:\\ildot-pw.bentley.com:PWIDOT\Documents\IDOT Offices\District 5\Projects\D570944\CADData\Design\D570944 - Traffic Signal sheet file.dgn

BILL OF MATERIALS

U.S. 136 & MAPPLEWOOOD DR.

ITEM	UNIT	QUANTITY
SERVICE INSTALLATION, TYPE A	EACH	1.0
UNDERGROUND CONDUIT, PVC, 2" DIA.	FOOT	185.0
UNDERGROUND CONDUIT, PVC, 2 1/2" DIA.	FOOT	64.0
UNDERGROUND CONDUIT, PVC, 3" DIA.	FOOT	187.0
UNDERGROUND CONDUIT, PVC, 4" DIA.	FOOT	116.0
HANDHOLE	EACH	4.0
DOUBLE HANDHOLE	EACH	1.0
ELECTRIC CABLE IN CONDUIT, 600V (XLP-TYPE USE) 1/C NO. 10	FOOT	1479.0
LUMINAIRE, LED, ROADWAY, OUTPUT DESIGNATION G	EACH	4.0
FULL-ACTUATED CONTROLLER AND TYPE IV CABINET	EACH	1.0
UNINTERRUPTABLE POWER SUPPLY, STANDARD	EACH	1.0
ELECTRIC CABLE IN CONDUIT, SIGNAL NO. 12 3C	FOOT	1291.0
ELECTRIC CABLE IN CONDUIT, SIGNAL NO. 12 4C	FOOT	325.0
ELECTRIC CABLE IN CONDUIT, SIGNAL NO. 12 5C	FOOT	1483.0
ELECTRIC CABLE IN CONDUIT, SIGNAL NO. 12 7C	FOOT	1436.0
ELECTRIC CABLE IN CONDUIT, SERVICE, NO. 6 2C	FOOT	32.0
ELECTRIC CABLE IN CONDUIT, EQUIPMENT GROUNDING CONDUCTOR, NO. 6 1C	FOOT	529.0
TRAFFIC SIGNAL POST, ALUMINUM 10 FT.	EACH	3.0
TRAFFIC SIGNAL POST, ALUMINUM 14 FT.	EACH	3.0
TRAFFIC SIGNAL POST, ALUMINUM 16 FT.	EACH	1.0
STEEL COMBINATION MAST ARM ASSEMBLY AND POLE 38 FT.	EACH	1.0
STEEL COMBINATION MAST ARM ASSEMBLY AND POLE 42 FT.	EACH	1.0
STEEL COMBINATION MAST ARM ASSEMBLY AND POLE 46 FT.	EACH	1.0
STEEL COMBINATION MAST ARM ASSEMBLY AND POLE 48 FT.	EACH	1.0
CONCRETE FOUNDATION, TYPE A	FOOT	21.7
CONCRETE FOUNDATION, TYPE C	FOOT	3.5
CONCRETE FOUNDATION, TYPE E 36-INCH DIAMETER	FOOT	50.0
SIGNAL HEAD, POLYCARBONATE, LED, 1-FACE, 3-SECTION, BRACKET MOUNTED	EACH	4.0
SIGNAL HEAD, POLYCARBONATE, LED, 1-FACE, 3-SECTION, MAST ARM MOUNTED	EACH	8.0
SIGNAL HEAD, POLYCARBONATE, LED, 1-FACE, 4-SECTION, BRACKET MOUNTED	EACH	4.0
SIGNAL HEAD, POLYCARBONATE, LED, 1-FACE, 4-SECTION, MAST ARM MOUNTED	EACH	4.0
PEDESTRIAN SIGNAL HEAD, POLYCARBONATE, LED, 1-FACE, BRACKET MOUNTED WITH COUNT DOWN TIMER	EACH	8.0
TRAFFIC SIGNAL BACKPLATE, LOUVERED, ALUMINUM	EACH	20.0
REMOVE EXISTING TRAFFIC SIGNAL EQUIPMENT	EACH	1.0
REMOVE EXISTING HANDHOLE	EACH	6.0
REMOVE EXISTING DOUBLE HANDHOLE	EACH	1.0
REMOVE EXISTING CONCRETE FOUNDATION	EACH	10.0
ETHERNET SWITCH	EACH	1.0
VIDEO DETECTION SYSTEM COMPLETE	EACH	1.0
FIBER OPTIC CABLE 12 FIBERS, SINGLE MODE	FOOT	71.0
PEDESTRIAN PUSH-BUTTON POST, UNPAINTED ALUMINUM, TYPE II	EACH	6.0
ACCESSIBLE PEDESTRIAN SIGNALS	EACH	8.0

U.S. 136 & MAPPLEWOOD DR. SCHEDULES

81400100 HANDHOLE

STA. 2362+36.5; 40.4' LT.	1.0	EACH
STA. 2362+37.2; 47.8' RT.	1.0	EACH
STA. 101+21.2; 54.9' LT.	1.0	EACH
STA. 101+12.0; 50.40' RT.	1.0	EACH
TOTAL =	4.0	EACH

81400300 DOUBLE HANDHOLE

STA. 101+24.0; 45.7' RT.	1.0	EACH

87502640 TRAFFIC SIGNAL POST, A 10 FT.

STA. 2363+39.0; 45.5' RT.	1.0	EACH
STA. 100+01.3; 41.6' LT.	1.0	EACH
STA. 101+16.0; 39.6' RT.	1.0	EACH
TOTAL =	3.0	EACH

87502680 TRAFFIC SIGNAL POST, A 14 FT.

STA. 2362+28.3; 38.9' RT.	1.0	EACH
STA. 100+18.1; 59.5' LT.	1.0	EACH
STA. 101+00.8; 60.2' RT.	1.0	EACH
TOTAL =	3.0	EACH

87502700 TRAFFIC SIGNAL POST, A 16 FT.

STA. 101+19.2; 42.1' LT.	1.0	EACH

87702920 STL. COMB. MAA&P 38 FT.

STA. 100+19.9; 68.0' RT.	1.0	EACH

87702940 STL COMB. MAA&P 42 FT.

STA. 101+01.5; 61.9' LT.	1.0	EACH

87702960 STL COMB. MAA&P 46 FT.

STA. 101+32.1; 46.7' RT.	1.0	EACH

87702970 STL COMB. MAA&P 48 FT.

STA. 2632+32.2; 48.2' LT.	1.0	EACH

87800100 CONC. FDN. TY. A

STA. 2362+28.3; 38.9' RT.	3.1	FOOT
STA. 2362+39.0; 47.8' RT.	3.1	FOOT
STA. 100+01.3; 41.6' LT.	3.1	FOOT
STA. 100+18.3; 59.5' LT.	3.1	FOOT
STA. 101+00.8; 60.2' RT.	3.1	FOOT
STA. 101+16.0; 39.6' RT.	3.1	FOOT
STA. 101+19.2; 42.1' LT.	3.1	FOOT
TOTAL =	21.7	FOOT

87800150 CONC. FDN. TY. C

STA. 101+24.0; 51.0' RT.	3.5	FOOT

87800415 CONC. FDN. TY. E-36"

STA. 2362+32.2; 48.2' LT.	13.0	FOOT
STA. 100+19.9; 68.0' RT.	11.0	FOOT
STA. 101+01.5; 61.9' LT.	13.0	FOOT
STA. 101+32.1; 46.7' RT.	13.0	FOOT
TOTAL =	50.0	FOOT

X87600100 PED. P-B POST TY 2

STA. 2362+38.9; 40.1' RT.	1.0	EACH
STA. 100+09.1; 45.8' RT.	1.0	EACH
STA. 100+12.0; 45.9' LT.	1.0	EACH
STA. 101+02.0; 52.0' LT.	1.0	EACH
STA. 101+11.7; 44.8' LT.	1.0	EACH
STA. 101+07.9; 45.6' RT.	1.0	EACH
TOTAL =	6.0	EACH

X8760200 ACCESSIBLE PED. SIGNALS

STA. 2362+38.9'; 40.1' RT.	1.0	EACH
STA. 100+09.1; 45.8' RT.	1.0	EACH
STA. 100+01.3; 41.6' LT.	1.0	EACH
STA. 100+12.0; 45.9' LT.	1.0	EACH
STA. 101+02.0; 52.0' LT.	1.0	EACH
STA. 101+11.7; 44.8' LT.	1.0	EACH
STA. 101+07.9; 45.6' RT.	1.0	EACH
STA. 101+16.0; 39.6' RT.	1.0	EACH
TOTAL =	8.0	EACH

89502380 REMOVE EXIST. HANDHOLE

STA. 100+12.6; 63.5' LT.	1.0	EACH
STA. 2362+35.0; 38.5' RT.	1.0	EACH
STA. 100+05.1; 70.3' RT.	1.0	EACH
STA. 100+97.8; 71.5' RT.	1.0	EACH
STA. 101+09.0; 52.7' LT.	1.0	EACH
TOTAL =	5.0	EACH

89502382 REM. EXIST. DBL HANDHOLE

STA. 100+00.3; 48.3' LT.	1.0	EACH

89502385 REM. EXIST. CONC. FDN.

STA. 2362+25.6; 42.1' LT.	1.0	EACH
STA. 2362+36.1; 39.4' RT.	1.0	EACH
STA. 100+00.5; 58.7' LT.	1.0	EACH
STA. 100+18.2; 56.6' LT.	1.0	EACH
STA. 100+20.1; 73.1' RT.	1.0	EACH
STA. 101+01.7; 54.2' RT.	1.0	EACH
STA. 101+09.0; 66.3' LT.	1.0	EACH
STA. 101+12.2; 45.4' LT.	1.0	EACH
STA. 101+14.1; 47.6' RT.	1.0	EACH
	9.0	EACH

X8760200 ACCESSIBLE PEDESTRIAN SIGNALS

STA. 100+12.0; 45.9' LT.	1.0	EACH
STA. 100+01.3; 41.6' LT.	1.0	EACH
STA. 2362+38.9; 40.1' RT.	1.0	EACH
STA. 100+09.1; 68.0' RT.	1.0	EACH
STA. 101+02.0; 52.0' LT.	1.0	EACH
STA. 101+11.7; 44.8' LT.	1.0	EACH
STA. 101+07.9; 45.6' RT.	1.0	EACH
STA. 101+16.0; 39.6' RT.	1.0	EACH
TOTAL =	8.0	EACH

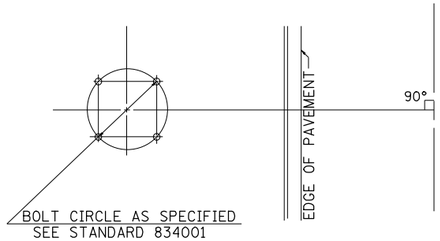

DETAIL OF MAST ARM FOUNDATION BOLT PATTERN

VIDEO CAMERA MOUNTING DETAIL

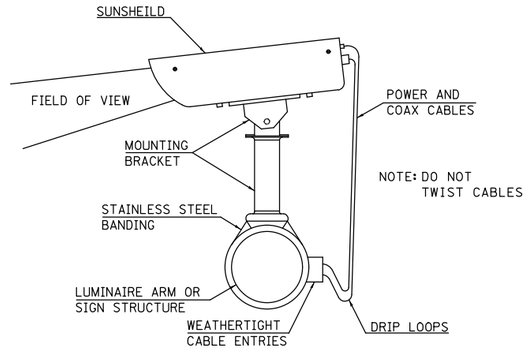

PHASE DESIGNATION DIAGRAM

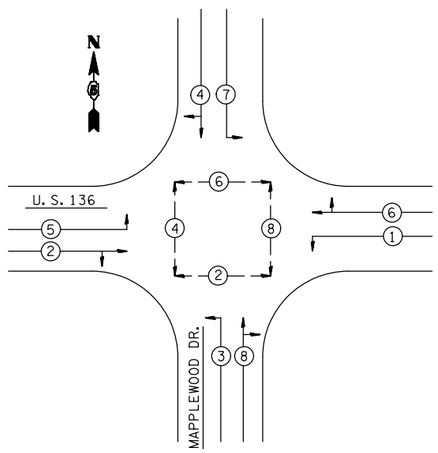

TRAFFIC SIGNAL GENERAL NOTES

1 THE ACTUAL LOCATION OF ALL SIGNAL FOUNDATIONS, HANDHOLES, AND TRAFFIC CONTROLLER WILL BE DETERMINED IN THE FIELD BY THE ENGINEER.
2 THE FINAL LOCATIONS OF ALL TRAFFIC CONTROL ITEMS SHALL BE VERIFIED BY THE ENGINEER IN THE FIELD.
3 POST MOUNTED SIGNALS SHALL BE INSTALLED SO THAT NO PART OF THE SIGNAL HEAD IS WITHIN 2 FT. OF THE FACE OF CURB.
4 ALL MAST ARM POLES SHALL BE A MINIMUM OF 6 FT. FROM THE CENTER OF THE POLE TO THE FACE OF CURB (ON THE MAST ARM SIDE) OR AS SHOWN ON THE PLANS.
5 COMBINATION MAST ARM ASSEMBLIES SHALL BE FURNISHED WITH 15' LUMINAIRE TRUSS ARMS WITH A MOUNTED LUMINAIRE HEIGHT OF 40 FT.
6 ALL TRAFFIC SIGNAL MAST ARMS MUST BE DESIGNED FOR THE LOADINGS SHOWN ON THE HIGHWAY STANDARDS OR THESE SIGNAL PLANS, WHICHEVER IS GREATER.
7 SIGNAL FACES FOR THE NORTH APPROACH ARE NOTED AS "A","B" FOR THE SOUTH APPROACH,"C" FOR THE WEST APPROACH, AND "D" FOR THE EAST APPROACH.
8 ALIGN ADJACENT RED INDICATIONS TO SAME HEIGHT ABOVE PAVEMENT.
9 THE BASE FOR A TRAFFIC SIGNAL POST SHALL BE SITUATED SUCH THAT THE HANDHOLE IS LOCATED ON A SIDE AWAY FROM A TRAVELED LANE.
10 ITEMS REMOVED WILL BECOME THE PROPERTY OF THE CONTRACTOR UNLESS OTHERWISE NOTED ON THE PLANS.
11 THE CONTRACTOR SHALL BE RESPONSIBLE FOR OBTAINING ELECTRICAL SERVICE FOR THE TRAFFIC SIGNALS. THE CONTRACTOR SHALL CONTACT THE UTILITY COMPANY PRIOR TO COMMENCEMENT OF WORK TO OBTAIN UTILITY COMPANY REQUIREMENTS FOR THE SERVICE INSTALLATION
12 THE CONTRACTOR SHALL SUPPLY AND MOUNT SUPPLEMENTAL SIGNS BY THE MASTARM MOUNTED FYA SIGNAL HEADS STATING "LEFT TURN YIELD ON FLASHING YELLOW ARROW" (R10-I109 AS SHOWN IN THE ILLINOIS STANDARD HIGHWAY SIGNS BOOK -JANUARY, 2022)
13 ALL WIRING SPLICES THAT OCCUR AT THE MAST ARM SHALL BE LOCATED IN THE HANDHOLE AT THE BASE OF THE POST.

MAST ARM DAMPENING DEVICE MOUNTING DETAIL

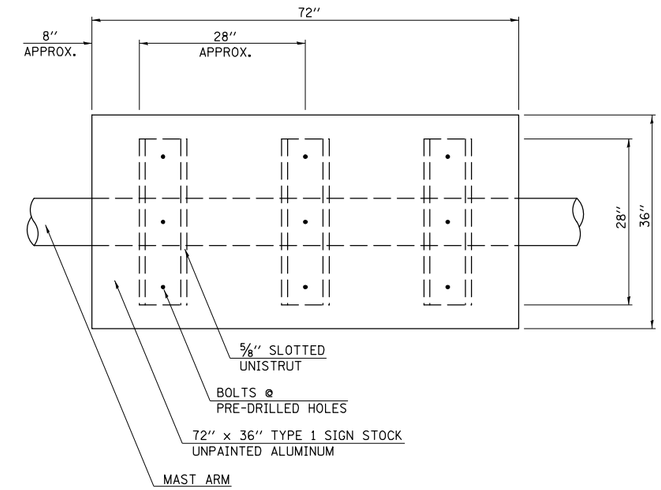

PLAN VIEW

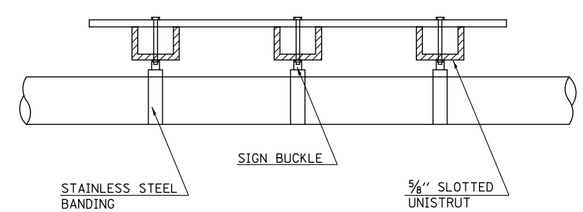

ELEVATION

NOTE: PAINT ENDS OF UNISTRUT WITH SPRAY ON GALVANIZED PAINT

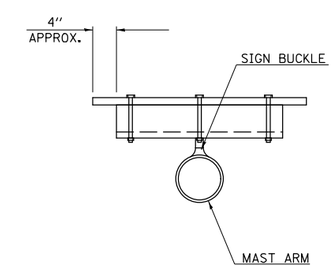

CROSS SECTION

MODEL: $MODELNAME$
FILE NAME: pw:\\ildot-pw.bentley.com:PWIDOT\Documents\IDOT Offices\District 5\Project\D570944\CADData\Design\D570944 - Traffic Signal Sheet 1.dgn

USER NAME = Tyler.Pierson	DESIGNED -	REVISED -
	DRAWN -	REVISED -
PLOT SCALE = 40.0000 ' / in.	CHECKED -	REVISED -
PLOT DATE = 1/26/2023	DATE -	REVISED -

STATE OF ILLINOIS
DEPARTMENT OF TRANSPORTATION

U.S. 136 & MAPLESTREET DR.
DETAILS

SCALE: | SHEET OF SHEETS | STA. TO STA.

F.A. RTE.	SECTION	COUNTY	TOTAL SHEETS	SHEET NO.
		CONTRACT NO.		
	ILLINOIS	FED. AID PROJECT		

TRAFFIC SIGNAL MODERNIZATION

F.A.P. 709 (U.S. 136 / E. Grove Ave.)

&

Lon Dr.

1"=20'

0' 5' 10' 15' 20' 40' 60'

N

REMOVAL

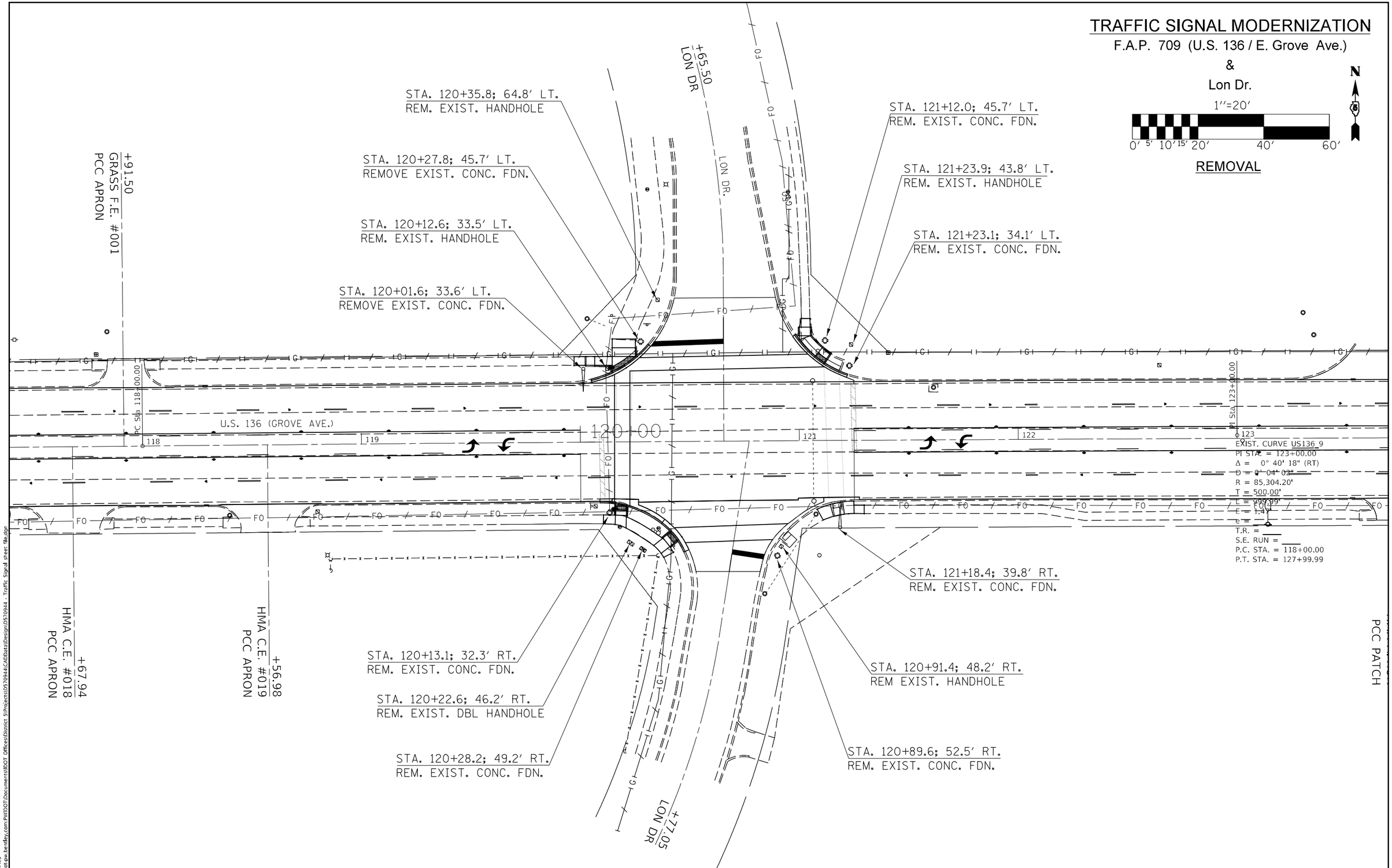

MODEL: $MODELNAME$
FILE NAME: pw:\\ildot-pw.bentley.com:PWIDOT\Documents\IDOT Offices\District 5\Projects\D570944\CADData\Design\D570944 - Traffic Signal sheet file.dgn

USER NAME = Tyler.Pierson	DESIGNED -	REVISED -	
	DRAWN -	REVISED -	
PLOT SCALE = 40.0000 ' / in.	CHECKED -	REVISED -	
PLOT DATE = 1/26/2023	DATE -	REVISED -	

STATE OF ILLINOIS
DEPARTMENT OF TRANSPORTATION

LON DRIVE EXISTING SIGNAL REMOVAL

SCALE: | SHEET OF SHEETS | STA. TO STA.

F.A. RTE.	SECTION	COUNTY	TOTAL SHEETS	SHEET NO.

CONTRACT NO.

ILLINOIS | FED. AID PROJECT

TRAFFIC SIGNAL MODERNIZATION

F.A.P. 709 (U.S. 136 / E. Grove Ave.)

&

Lon Dr.

1"=20'

0' 5' 10' 15' 20' 40' 60'

N

FLASHING BEACON LAYOUT

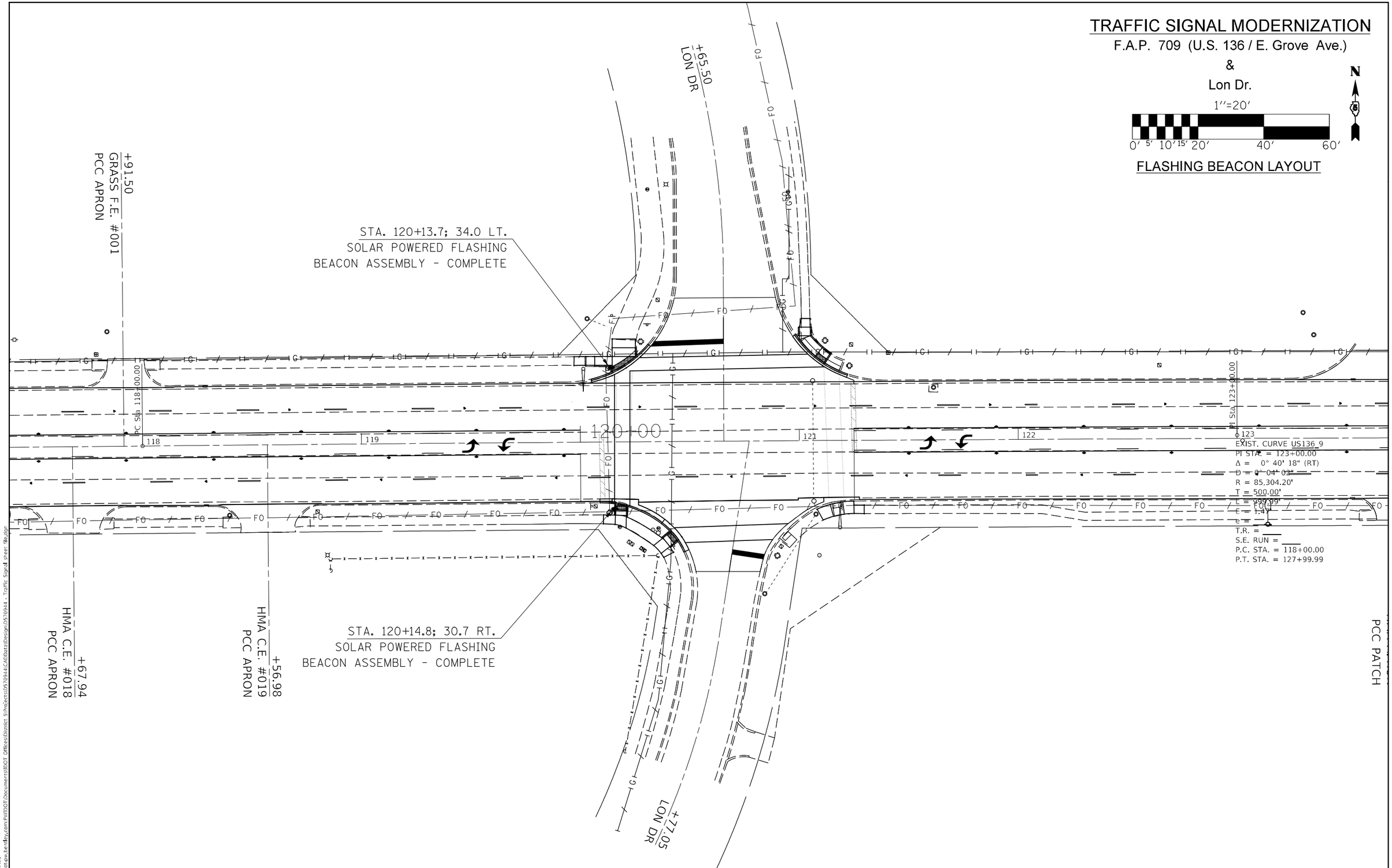

USER NAME = Tyler.Pierson	DESIGNED -	REVISED -	
	DRAWN -	REVISED -	
PLOT SCALE = 40.0000 ' / in.	CHECKED -	REVISED -	
PLOT DATE = 1/26/2023	DATE -	REVISED -	

STATE OF ILLINOIS
DEPARTMENT OF TRANSPORTATION

LON DRIVE RECTANGULAR RAPID FLASHING BEACON ASSEMBLY (COMPLETE)

SCALE: | SHEET OF SHEETS | STA. TO STA.

F.A. RTE.	SECTION	COUNTY	TOTAL SHEETS	SHEET NO.

CONTRACT NO.

ILLINOIS | FED. AID PROJECT

MODEL: $MODELNAME$
FILE NAME: pw:\\ildot-pw.bentley.com:PWIDOT\Documents\IDOT Offices\District 5\Projects\D570944\CADData\Design\D570944 - Traffic Signal Sheet 1Ile.dgn

DETAIL FOR SOLAR POWERED FLASHING BEACON ASSEMBLY - COMPLETE

2 - W11-2
(30x30)

W16-7P
LEFT DIAGONAL
ARROW
(24x12)

W16-7P
RIGHT DIAGONAL
ARROW
(24x12)

PEDESTRIAN CROSSING SIGN DETAILS

R10-25
(9x12)

PEDESTRIAN PUSH–BUTTON SIGN DETAILS

NOTES:

1. WARNING SIGN SHALL HAVE A FLUORESCENT YELLOW-GREEN BACKGROUND COLOR, SUPPLEMENTAL WARNING PLAQUE BACKGROUND COLOR TO MATCH
2. SIGNS SHALL MEET MUTCD MINIMUM RETROREFLECTIVITY REQUIREMENTS, PER ASTM D4956

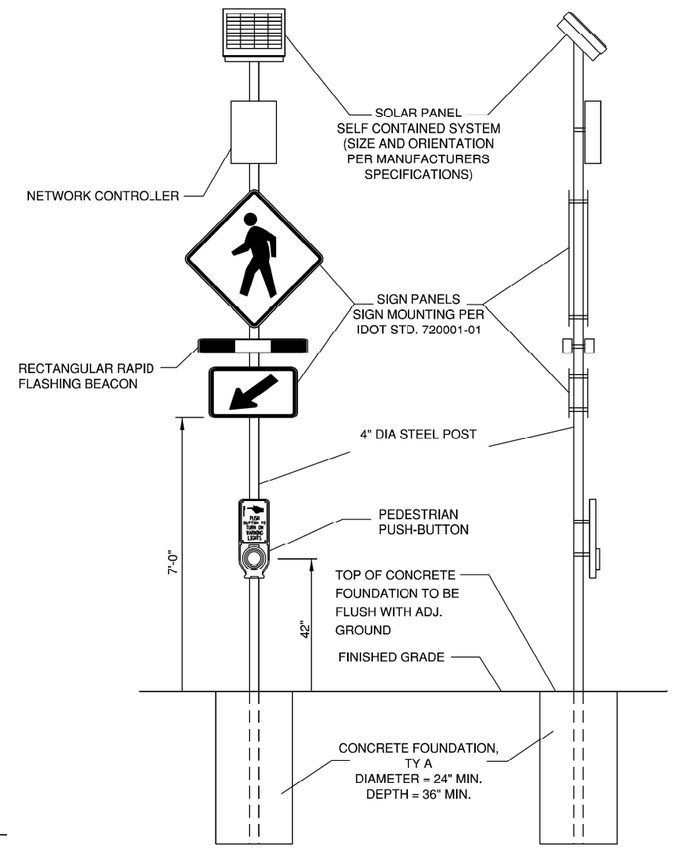

U.S. 136 & LON DR. SCHEDULES

89502380 REMOVE EXIST. HANDHOLE

STA. 120+06.7; 29.3' RT.	1	EACH
STA. 120+12.6; 33.5' LT.	1	EACH
STA. 120+35.8; 64.8' LT.	1	EACH
STA. 120+91.4; 48.2' RT.	1	EACH
STA. 121+23.9; 43.8' LT.	1	EACH
TOTAL =	5	EACH

89502382 REMOVE EX. DBL. HANDHOLE

STA. 120+22.6; 46.2' RT.	1	EACH

89502385 REMOVE EXIST. CONC. FDN.

STA. 120+01.6; 33.6 LT.	1	EACH
STA. 120+13.1; 32.3' RT.	1	EACH
STA. 120+27.8; 45.1'LT.	1	EACH
STA. 120+28.2; 49.2' RT.	1	EACH
STA. 120+89.6; 52.5' RT.	1	EACH
STA. 121+12.0; 45.7 LT.	1	EACH
STA. 121+18.4; 39.8' RT.	1	EACH
STA. 121+23.1; 34.1' LT.	1	EACH
TOTAL =	8	EACH

X1400326 RECT. RAPID FLASH. BEACON ASSEMBLY

STA. 120+13.7; 34.0' LT.	1	EACH
STA. 120+14.8; 30.7' RT.	1	EACH
TOTAL =	2	EACH

BILL OF MATERIALS

U.S. 136 & LON DR.

ITEM	UNIT	QUANTITY
REMOVE EXISTING TRAFFIC SIGNAL EQUIPMENT	EACH	1.0
REMOVE EXISTING HANDHOLE	EACH	4.0
REMOVE EXISTING DOUBLE HANDHOLE	EACH	1.0
REMOVE EXISTING CONCRETE FOUNDATION	EACH	8.0
RECTANGULAR RAPID FLASHING BEACON ASSEMBLY (COMPLETE)	EACH	2.0

MODEL: $MODEL NAMES
FILE NAME: pw:\\ildot-pw.bentley.com:PWIDOT\Documents\IDOT Offices\District 5\Projects\D570944\CADData\Design\D570944 - Traffic Signal sheet 1\le.dgn

USER NAME = Tyler.Pierson	DESIGNED -	REVISED -	
	DRAWN -	REVISED -	
PLOT SCALE = 40.0000 ' / in.	CHECKED -	REVISED -	
PLOT DATE = 1/26/2023	DATE -	REVISED -	

STATE OF ILLINOIS
DEPARTMENT OF TRANSPORTATION

U.S. 136 & LON DR. BILL OF MATERIALS, SCHEDULES, & DETAILS

SCALE: | SHEET OF SHEETS | STA. TO STA.

F.A. RTE.	SECTION	COUNTY	TOTAL SHEETS	SHEET NO.
		CONTRACT NO.		
	ILLINOIS	FED. AID PROJECT		

EXISTING STRUCTURE: S.N. 010-0257, STATION 299+74.00
CARRYING FAP 709 (US-136) OVER THE EAST BRANCH OF THE
SALT FORK RIVER, APPROXIMATELY 3.0 MILES EAST OF RANTOUL.
A SINGLE SPAN CONCRETE SLAB BRIDGE ON CONCRETE PILE
SUPPORTED ABUTMENTS.

LENGTH: 47'-0" BK. TO BK. OF ABUTMENTS
WIDTH: 35'-2" OUT-TO-OUT
BRIDGE RDWY WIDTH: 32'-0"
APPROACH RDWY WIDTH: 32'-0"

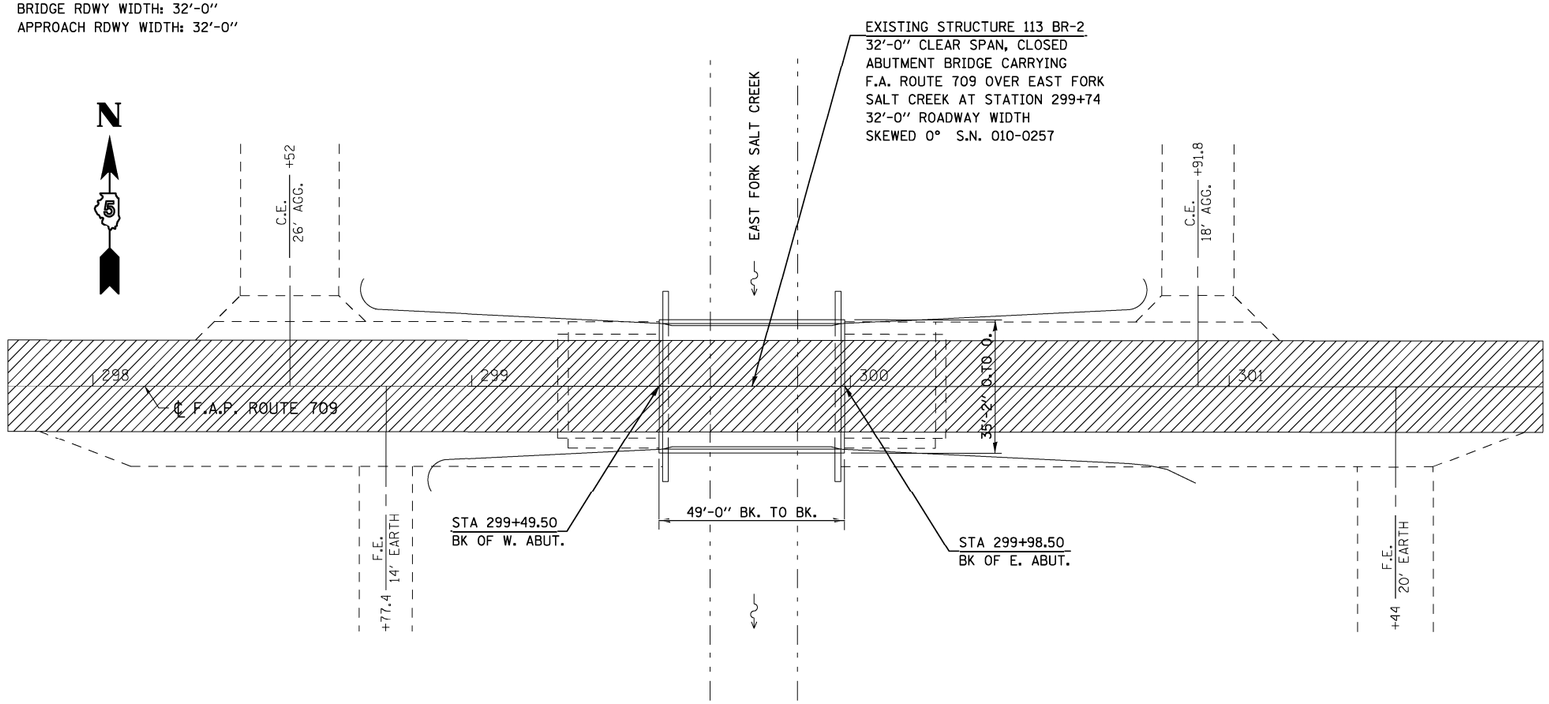

PLAN VIEW
S.N. 010-0257

GENERAL NOTES

PLAN DIMENSIONS AND DETAILS RELATIVE TO THE STRUCTURE HAVE BEEN TAKEN FROM EXISTING PLANS AND ARE SUBJECT TO NOMINAL CONSTRUCTION VARIATIONS. IT SHALL BE THE CONTRACTOR'S RESPONSIBILITY TO VERIFY SUCH DIMENSIONS AND DETAILS IN THE FIELD AND MAKE THE NECESSARY APPROVED ADJUSTMENTS PRIOR TO CONSTRUCTION OR ORDERING OF MATERIALS. SUCH VARIATIONS SHALL NOT BE CAUSE FOR ADDITIONAL COMPENSATION OR A CHANGE IN THE SCOPE OF WORK. HOWEVER, THE CONTRACTOR WILL BE PAID FOR THE QUANTITY ACTUALLY FURNISHED AT THE CONTRACT UNIT PRICE FOR THE WORK.

BILL OF MATERIALS

ITEM	UNITS	TOTAL
BITUMINOUS MATERIALS (TACK COAT)	SQ YD	99.0
HMA BINDER N-50, IL 9.5FG 140 LBS / SQ YD	TON	11.0
HMA SURFACE COURSE, IL 9.5 MIX C, N-50, 168 LBS / SQ YD	TON	13.0
HOT-MIX ASPHALT SURFACE REMOVAL 2-¾"	SQ YD	146.0

SCOPE OF WORK

1. COLD MILLING THE SAME WIDTH AS THE ADJACENT ROADWAY ACROSS THE STRUCTURE AT DEPTH OF 2¾".
2. INLAY PROPOSED 2¾" HMA SURFACE COURSE ACROSS BRIDGE DECK AND APPROACH PAVEMENTS.

LEGEND

H.M.A. SURFACE COURSE INLAY, 2¾"

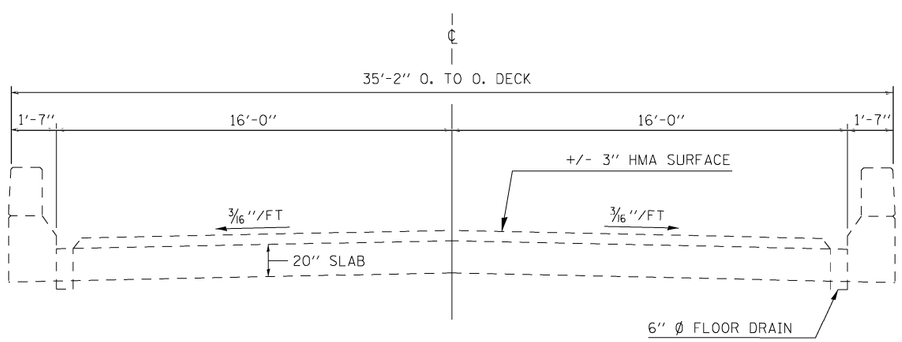

EXISTING TYPICAL CROSS SECTION
(LOOKING EAST)

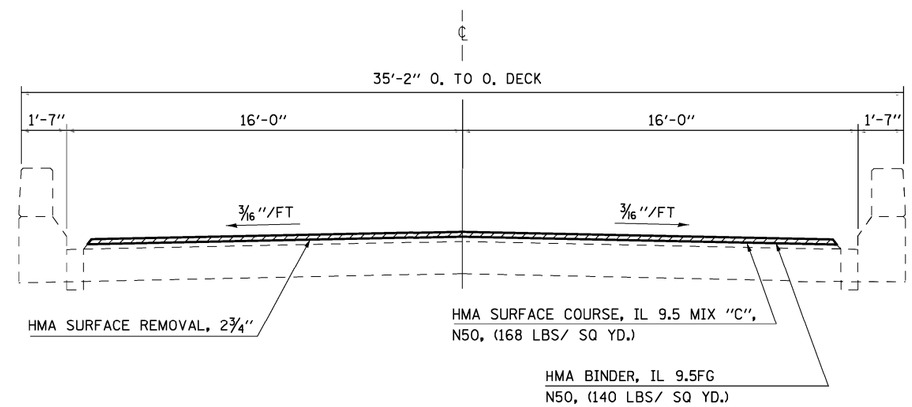

PROPOSED TYPICAL CROSS SECTION
(LOOKING EAST)

LICENSED STRUCTURAL ENGINEER
JAYME F. SCHIFF
081-005540
STATE OF ILLINOIS

EXPIRES 11-30-2024

Jayme F. Schiff

FILE NAME = pw:\\ildot-pw.bentley.com:PWIDOT\Documents\IDOT Offices\District 5\Projects\D570944\CAD\Drawings\Hydraulics\70944-sht-WORKFILE.dgn	USER NAME = Tyler.Pierson	DESIGNED - JMS	REVISED -
		DRAWN - JMS	REVISED -
	PLOT SCALE = 40.0000 ' / in.	CHECKED -	REVISED -
$MODELNAME$	PLOT DATE = 1/26/2023	DATE - 05-03-22	REVISED -

STATE OF ILLINOIS
DEPARTMENT OF TRANSPORTATION

GENERAL PLAN & STRUCTURE DETAIL
S.N. 010-0257

SCALE: 1" = 20' | SHEET 1 OF 1 SHEETS | STA. 298+00.00 TO STA. 301+00.00

F.A.P. RTE.	SECTION	COUNTY	TOTAL SHEETS	SHEET NO.
709	(113)RS-7	CHAMPAIGN		

CONTRACT NO. 70944

ILLINOIS FED. AID PROJECT

NOTES:
1) M.E.G. = MATCH EXISTING GRADE.
2) EXISTING CONDITIONS MAY VARY SLIGHTLY IN THE FIELD. THE ENGINEER CAN ADJUST GRADES AND TIE IN LOCATIONS AS NECESSARY TO CONSTRUCT RAMP. ANY ADJUSTMENTS MADE BY THE ENGINEER SHALL MEET ADA REQUIREMENTS FOR CURB RAMPS.
3) MAX. ALLOWABLE RUNNING SLOPE OF RAMP = 1:12 (8.3%), SLOPE <7% PREFERRED.
4) MAX. ALLOWABLE RUNNING SLOPE OF TURNING SPACE = 1:50 (2%), SLOPE <1.5% PREFERRED
5) MIN ALLOWABLE WIDTH OF RAMP = 4'
6) MAX. ALLOWABLE CROSS SLOPE OF SIDEWALK OR LANDING = 1:50 (2%), SLOPE <1.5% PREFERRED

LOCATION # 5 - N.W. QUADRANT US 136 & BETHANY PARK DR			
LOCATION	STATION	OFFSET	ELEV.
1	108+00.58	35.04 LT	730.46
2	108+02.19	39.04 LT	730.39
3	107+99.91	35.04 LT	730.50
4	108+01.58	39.04 LT	730.43
5	107+99.91	39.04 LT	730.45
6	107+93.91	35.04 LT	730.57
7	107+97.91	39.04 LT	730.47
8	107+93.91	39.04 LT	730.52
9	107+89.91	35.04 LT	730.63
10	107+89.91	39.04 LT	730.58
11	107+85.91	35.04 LT	730.75
12	107+85.91	39.04 LT	730.70
13	107+80.72	35.09 LT	730.93
14	107+80.77	38.99 LT	730.90
15	107+97.91	43.04 LT	730.49
16	107+93.91	43.04 LT	730.54
17	107+97.99	48.56 LT	730.56
18	107+93.99	48.49 LT	730.56

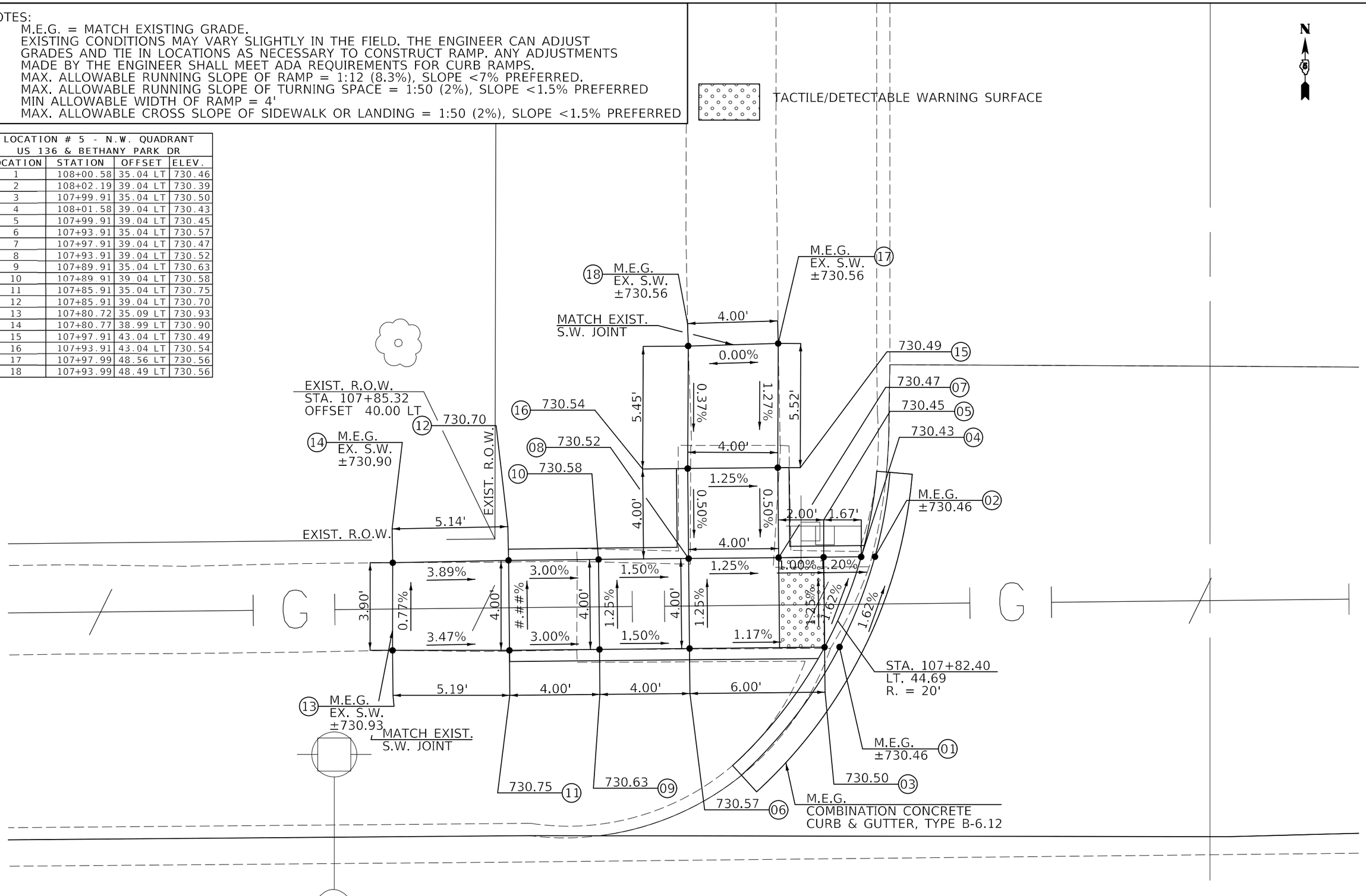

MODEL: $MODELNAME$
FILE NAME: pw:\\ildot-pw.bentley.com:PWIDOT\Documents\IDOT Offices\District 5\Project\D570944\CADData\CADsheets\D570944-sht-Detail-ADA Ramps.dgn

USER NAME = Tyler.Pierson	DESIGNED -	REVISED -	
	DRAWN -	REVISED -	
PLOT SCALE = 4.0000 ' / in.	CHECKED -	REVISED -	
PLOT DATE = 1/26/2023	DATE -	REVISED -	

STATE OF ILLINOIS
DEPARTMENT OF TRANSPORTATION

ADA DETAIL – LOCATIONS 1 NW QUADRANTS
US 136 & BETHANY PARK DR

SCALE: 1" = 2' | SHEET 1 OF 5 SHEETS | STA. TO STA.

F.A.P. RTE.	SECTION	COUNTY	TOTAL SHEETS	SHEET NO.
709	(113)RS-7	CHAMPAIGN	103	76
		CONTRACT NO. 70944		
		ILLINOIS	FED. AID PROJECT	

NOTES:
1) M.E.G. = MATCH EXISTING GRADE.
2) EXISTING CONDITIONS MAY VARY SLIGHTLY IN THE FIELD. THE ENGINEER CAN ADJUST GRADES AND TIE IN LOCATIONS AS NECESSARY TO CONSTRUCT RAMP. ANY ADJUSTMENTS MADE BY THE ENGINEER SHALL MEET ADA REQUIREMENTS FOR CURB RAMPS.
3) MAX. ALLOWABLE RUNNING SLOPE OF RAMP = 1:12 (8.3%), SLOPE <7% PREFERRED.
4) MAX. ALLOWABLE RUNNING SLOPE OF TURNING SPACE = 1:50 (2%), SLOPE <1.5% PREFERRED
5) MIN ALLOWABLE WIDTH OF RAMP = 4'
6) MAX. ALLOWABLE CROSS SLOPE OF SIDEWALK OR LANDING = 1:50 (2%), SLOPE <1.5% PREFERRED

a: 04 TO 01, LENGTH = 1.24', SLOPE = 0.81%
b: 05 TO 02, LENGTH = 1.10', SLOPE = 0.91%
c: 06 TO 03, LENGTH = 1.53', SLOPE = 1.31%

TACTILE/DETECTABLE WARNING SURFACE

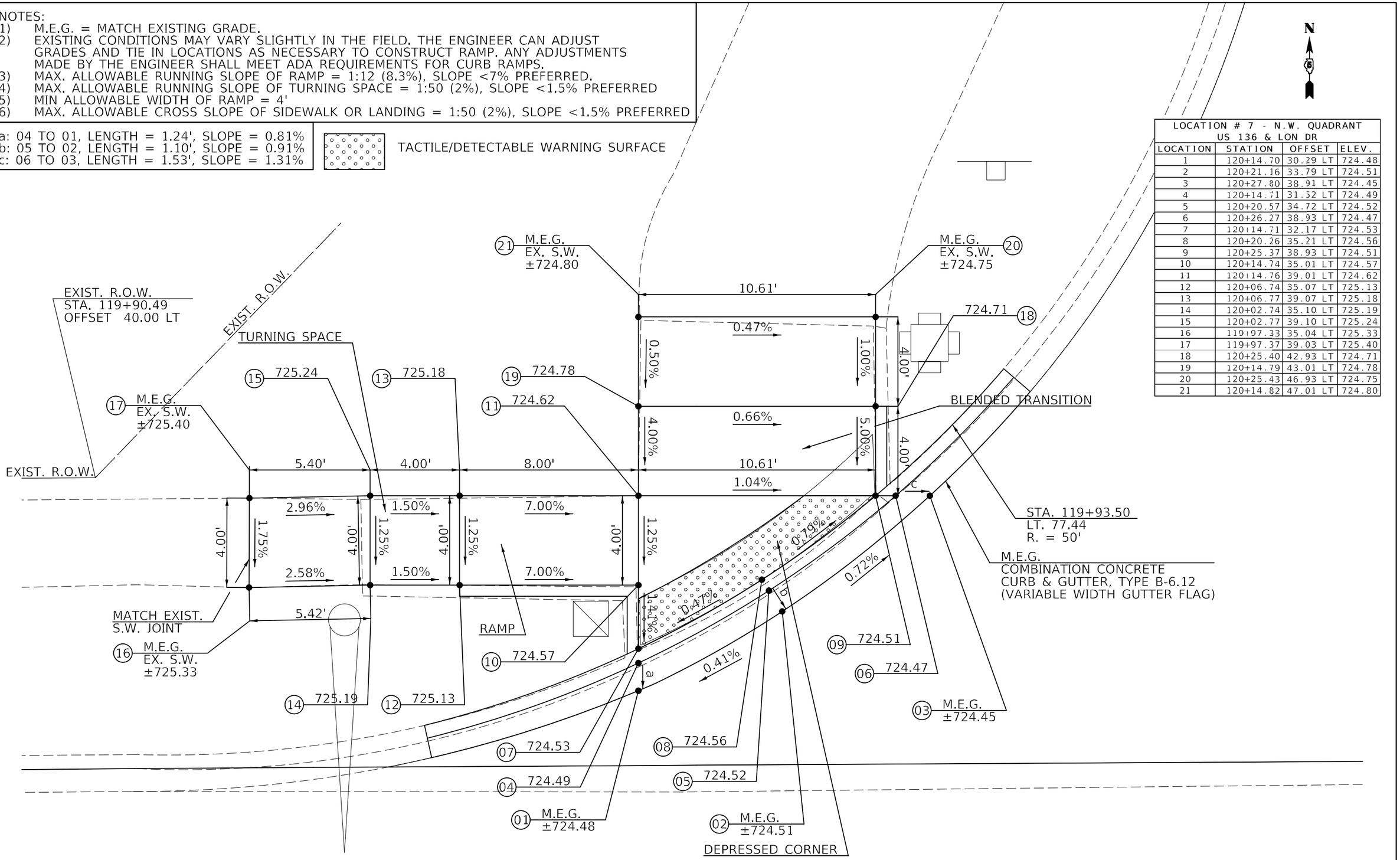

LOCATION # 7 - N.W. QUADRANT US 136 & LON DR			
LOCATION	STATION	OFFSET	ELEV.
1	120+14.70	30.29 LT	724.48
2	120+21.16	33.79 LT	724.51
3	120+27.80	38.91 LT	724.45
4	120+14.71	31.52 LT	724.49
5	120+20.57	34.72 LT	724.52
6	120+26.27	38.93 LT	724.47
7	120+14.71	32.17 LT	724.53
8	120+20.26	35.21 LT	724.56
9	120+25.37	38.93 LT	724.51
10	120+14.74	35.01 LT	724.57
11	120+14.76	39.01 LT	724.62
12	120+06.74	35.07 LT	725.13
13	120+06.77	39.07 LT	725.18
14	120+02.74	35.10 LT	725.19
15	120+02.77	39.10 LT	725.24
16	119+97.33	35.04 LT	725.33
17	119+97.37	39.03 LT	725.40
18	120+25.40	42.93 LT	724.71
19	120+14.79	43.01 LT	724.78
20	120+25.43	46.93 LT	724.75
21	120+14.82	47.01 LT	724.80

MODEL: $MODELNAME
FILE NAME: pw:\\ildot-pw.bentley.com:PWIDOT\Documents\IDOT Offices\District 5\Projects\D570944\CADData\CADsheets\D570944-sht-Detail-ADA Ramps.dgn

USER NAME = Tyler.Pierson	DESIGNED -	REVISED -	
	DRAWN -	REVISED -	
PLOT SCALE = 4.0000 ' / in.	CHECKED -	REVISED -	
PLOT DATE = 1/26/2023	DATE -	REVISED -	

STATE OF ILLINOIS
DEPARTMENT OF TRANSPORTATION

ADA DETAIL – LOCATION 2 NW QUADRANT
US 136 & LON DR

SCALE: 1" = 2' | SHEET 2 OF 5 SHEETS | STA. TO STA.

F.A.P. RTE.	SECTION	COUNTY	TOTAL SHEETS	SHEET NO.
709	(113)RS-7	CHAMPAIGN	103	77
		CONTRACT NO. 70944		
		ILLINOIS	FED. AID PROJECT	

NOTES:
1) M.E.G. = MATCH EXISTING GRADE.
2) EXISTING CONDITIONS MAY VARY SLIGHTLY IN THE FIELD. THE ENGINEER CAN ADJUST GRADES AND TIE IN LOCATIONS AS NECESSARY TO CONSTRUCT RAMP. ANY ADJUSTMENTS MADE BY THE ENGINEER SHALL MEET ADA REQUIREMENTS FOR CURB RAMPS.
3) MAX. ALLOWABLE RUNNING SLOPE OF RAMP = 1:12 (8.3%), SLOPE <7% PREFERRED.
4) MAX. ALLOWABLE RUNNING SLOPE OF TURNING SPACE = 1:50 (2%), SLOPE <1.5% PREFERRED
5) MIN ALLOWABLE WIDTH OF RAMP = 4'
6) MAX. ALLOWABLE CROSS SLOPE OF SIDEWALK OR LANDING = 1:50 (2%), SLOPE <1.5% PREFERRED

a: 01 TO 03, LENGTH = 0.94', SLOPE = 1.06%
b: 02 TO 04, LENGTH = 0.92', SLOPE = 1.09%

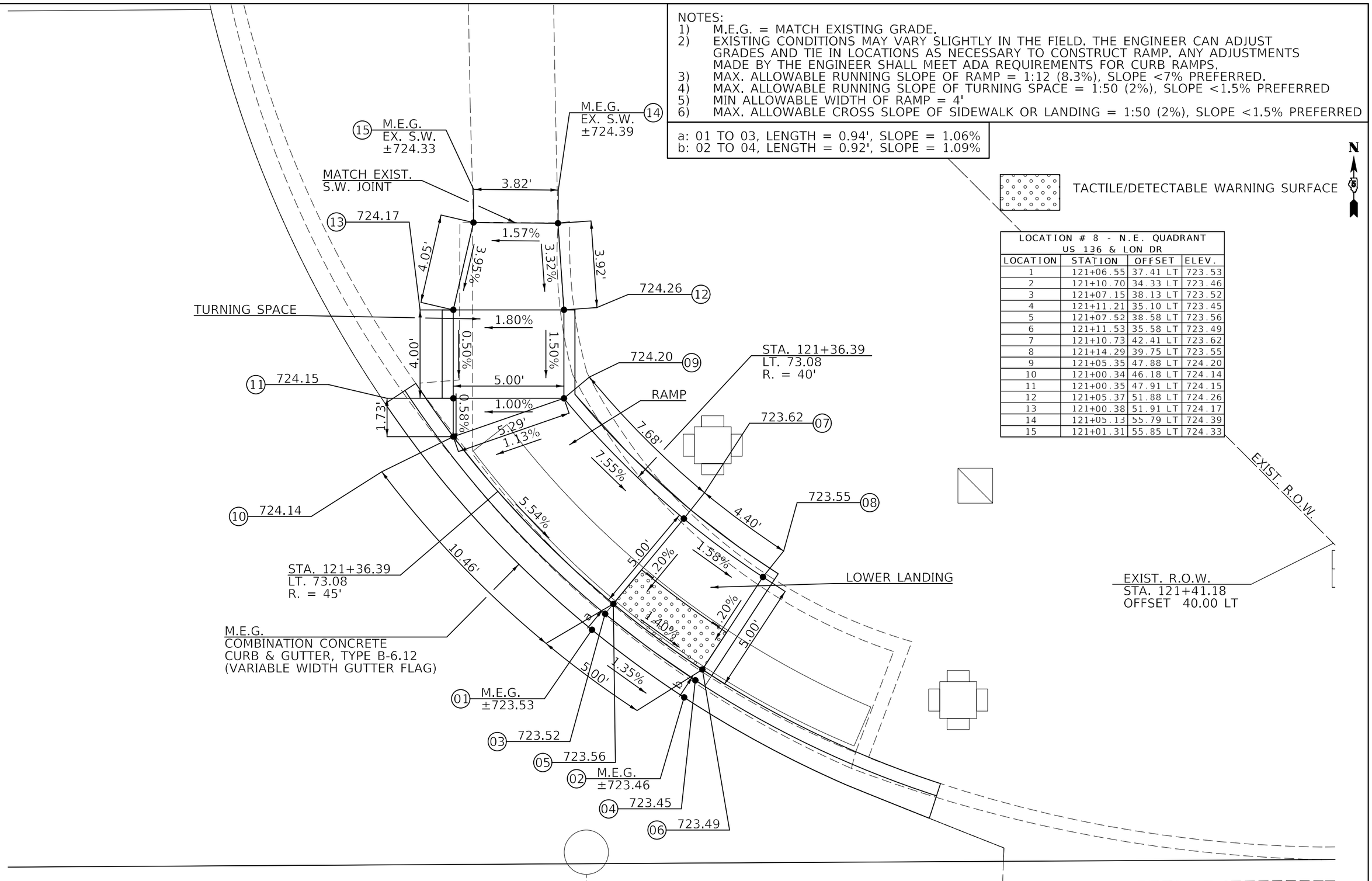

LOCATION # 8 - N.E. QUADRANT US 136 & LON DR			
LOCATION	STATION	OFFSET	ELEV.
1	121+06.55	37.41 LT	723.53
2	121+10.70	34.33 LT	723.46
3	121+07.15	38.13 LT	723.52
4	121+11.21	35.10 LT	723.45
5	121+07.52	38.58 LT	723.56
6	121+11.53	35.58 LT	723.49
7	121+10.73	42.41 LT	723.62
8	121+14.29	39.75 LT	723.55
9	121+05.35	47.88 LT	724.20
10	121+00.34	46.18 LT	724.14
11	121+00.35	47.91 LT	724.15
12	121+05.37	51.88 LT	724.26
13	121+00.38	51.91 LT	724.17
14	121+05.13	55.79 LT	724.39
15	121+01.31	55.85 LT	724.33

MODEL: $MODELNAME$
FILE NAME: pw:\\ildot-pw.bentley.com:PWIDOT\Documents\IDOT Offices\District 5\Projects\D570944\CADData\CADSheets\D570944-sht-Detail-ADA Ramps.dgn

USER NAME = Tyler.Pierson	DESIGNED -	REVISED -
	DRAWN -	REVISED -
PLOT SCALE = 4.0000 ' / in.	CHECKED -	REVISED -
PLOT DATE = 1/26/2023	DATE -	REVISED -

STATE OF ILLINOIS
DEPARTMENT OF TRANSPORTATION

ADA DETAIL – LOCATION 3 NE QUADRANT
US 136 & LON DR

SCALE: 1" = 2' | SHEET 3 OF 5 SHEETS | STA. TO STA.

F.A.P. RTE.	SECTION	COUNTY	TOTAL SHEETS	SHEET NO.
709	(113)RS-7	CHAMPAIGN	103	78
		CONTRACT NO. 70944		
		ILLINOIS	FED. AID PROJECT	

NOTES:
1) M.E.G. = MATCH EXISTING GRADE.
2) EXISTING CONDITIONS MAY VARY SLIGHTLY IN THE FIELD. THE ENGINEER CAN ADJUST GRADES AND TIE IN LOCATIONS AS NECESSARY TO CONSTRUCT RAMP. ANY ADJUSTMENTS MADE BY THE ENGINEER SHALL MEET ADA REQUIREMENTS FOR CURB RAMPS.
3) MAX. ALLOWABLE RUNNING SLOPE OF RAMP = 1:12 (8.3%), SLOPE <7% PREFERRED.
4) MAX. ALLOWABLE RUNNING SLOPE OF TURNING SPACE = 1:50 (2%), SLOPE <1.5% PREFERRED
5) MIN ALLOWABLE WIDTH OF RAMP = 4'
6) MAX. ALLOWABLE CROSS SLOPE OF SIDEWALK OR LANDING = 1:50 (2%), SLOPE <1.5% PREFERRED

a: 03 TO 01, LENGTH = 1.70', SLOPE = 0.59%
b: 04 TO 02, LENGTH = 2.66', SLOPE = 0.38%
c: 14 TO 16, LENGTH = 2.00', SLOPE = 0.50%
d: 15 TO 17, LENGTH = 2.04', SLOPE = 0.49%

e: 08 TO 25, LENGTH = 0.60', SLOPE = 0.00%
f: 07 TO 05, LENGTH = 0.91', SLOPE = 1.10%
g: 20 TO 24, LENGTH = 0.30', SLOPE = 0.00%

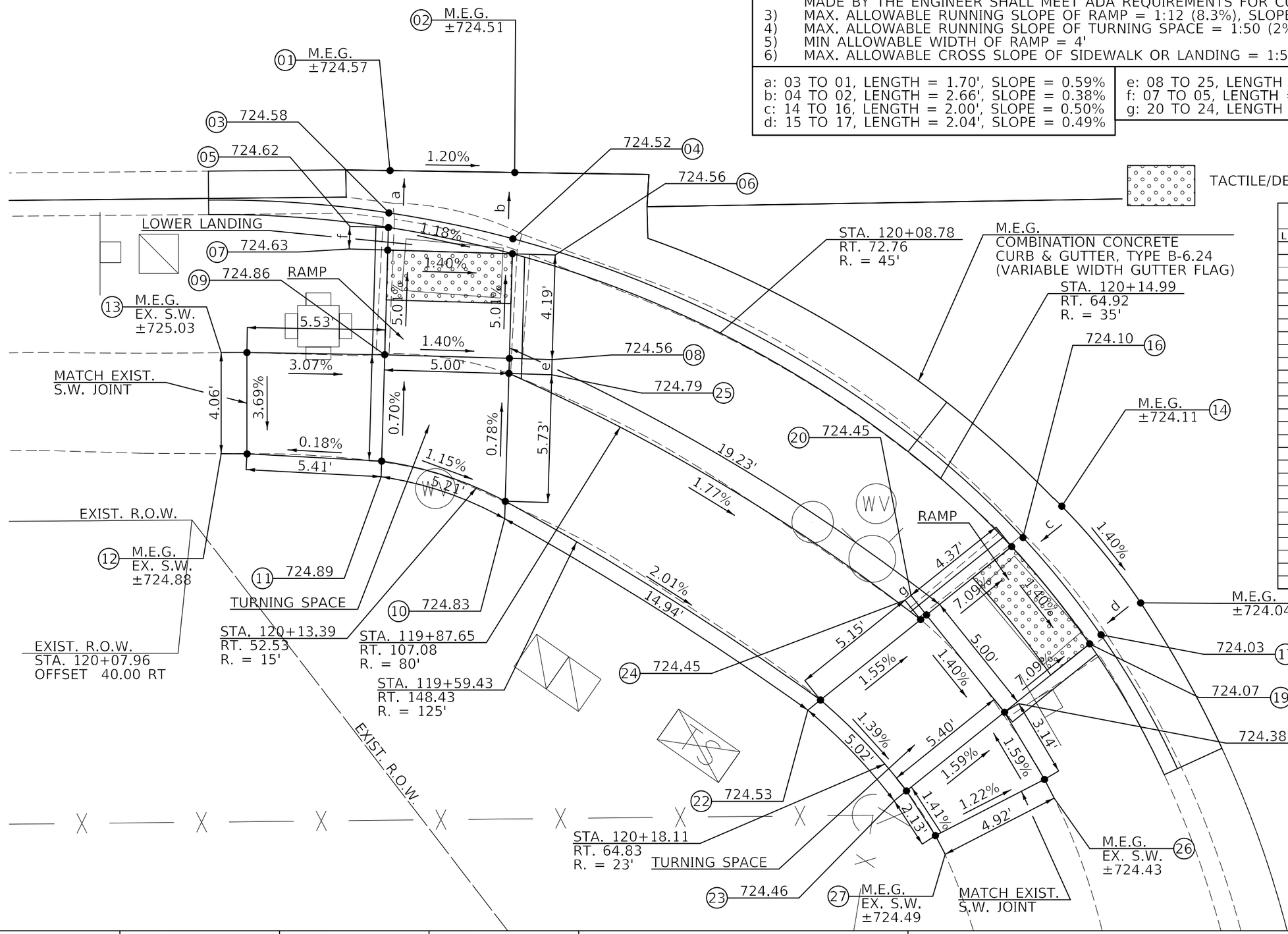

LOCATION # 9 - S.W. QUADRANT US 136 & LON DR			
LOCATION	STATION	OFFSET	ELEV.
1	120+16.01	26.05 RT	724.57
2	121+21.02	26.16 RT	724.51
3	120+15.95	27.75 RT	724.58
4	120+20.92	28.32 RT	724.52
5	120+15.93	28.33 RT	724.62
6	120+20.90	29.42 RT	724.56
7	120+15.90	29.24 RT	724.63
8	120+20.74	33.61 RT	724.77
9	120+15.75	33.43 RT	724.84
10	120+20.54	39.34 RT	724.81
11	120+15.59	37.70 RT	724.87
12	120+10.19	38.37 RT	724.88
13	120+10.22	33.30 RT	725.03
14	120+42.87	39.70 RT	724.11
15	120+46.00	43.60 RT	724.04
16	120+41.30	40.94 RT	724.10
17	120+44.40	44.86 RT	724.03
18	120+40.84	41.31 RT	724.14
19	120+43.94	45.23 RT	724.07
20	120+37.40	44.02 RT	724.45
21	120+40.51	47.94 RT	724.38
22	120+33.13	47.40 RT	724.53
23	120+36.55	51.07 RT	724.46
24	120+37.17	44.21 RT	724.45
25	120+20.72	34.22 RT	724.77
26	120+42.09	50.65 RT	724.43
27	120+37.70	52.87 RT	724.49

MODEL: $MODEL$NAMES
FILE NAME: pw:\\ildot-pw.bentley.com:PWIDOT\Documents\IDOT Offices\District 5\Projects\D570944\CADData\CADsheets\D570944-sht-Detail-ADA Ramps.dgn

USER NAME = Tyler.Pierson	DESIGNED -	REVISED -	
	DRAWN -	REVISED -	
PLOT SCALE = 4.0000 ' / in.	CHECKED -	REVISED -	
PLOT DATE = 1/26/2023	DATE -	REVISED -	

STATE OF ILLINOIS
DEPARTMENT OF TRANSPORTATION

ADA DETAIL – LOCATION 4 SW QUADRANT
US 136 & LON DR

SCALE: 1" = 2' | SHEET 4 OF 5 SHEETS | STA. | TO STA.

F.A.P. RTE.	SECTION	COUNTY	TOTAL SHEETS	SHEET NO.
709	(113)RS-7	CHAMPAIGN	103	79
		CONTRACT NO. 70944		
		ILLINOIS	FED. AID PROJECT	

NOTES:
1) M.E.G. = MATCH EXISTING GRADE.
2) EXISTING CONDITIONS MAY VARY SLIGHTLY IN THE FIELD. THE ENGINEER CAN ADJUST GRADES AND TIE IN LOCATIONS AS NECESSARY TO CONSTRUCT RAMP. ANY ADJUSTMENTS MADE BY THE ENGINEER SHALL MEET ADA REQUIREMENTS FOR CURB RAMPS.
3) MAX. ALLOWABLE RUNNING SLOPE OF RAMP = 1:12 (8.3%), SLOPE <7% PREFERRED.
4) MAX. ALLOWABLE RUNNING SLOPE OF TURNING SPACE = 1:50 (2%), SLOPE <1.5% PREFERRED
5) MIN ALLOWABLE WIDTH OF RAMP = 4'
6) MAX. ALLOWABLE CROSS SLOPE OF SIDEWALK OR LANDING = 1:50 (2%), SLOPE <1.5% PREFERRED

a: 01 TO 03, LENGTH = 2.09', SLOPE = 0.96%
b: 02 TO 04, LENGTH = 1.84', SLOPE = 1.09%

TACTILE/DETECTABLE WARNING SURFACE

LOCATION # 10 - S.E. QUADRANT US 136 & LON DR			
LOCATION	STATION	OFFSET	ELEV.
1	121+07.95	31.35 RT	724.11
2	121+10.70	36.29 RT	724.15
3	121+13.92	29.19 RT	724.05
4	121+15.41	34.62 RT	724.10
5	121+19.63	28.06 RT	723.99
6	121+20.32	33.66 RT	724.05
7	121+24.74	27.76 RT	723.94
8	121+24.83	33.40 RT	724.00
9	121+24.77	29.57 RT	723.94
10	121+29.46	33.50 RT	723.79
11	121+29.47	29.58 RT	723.84

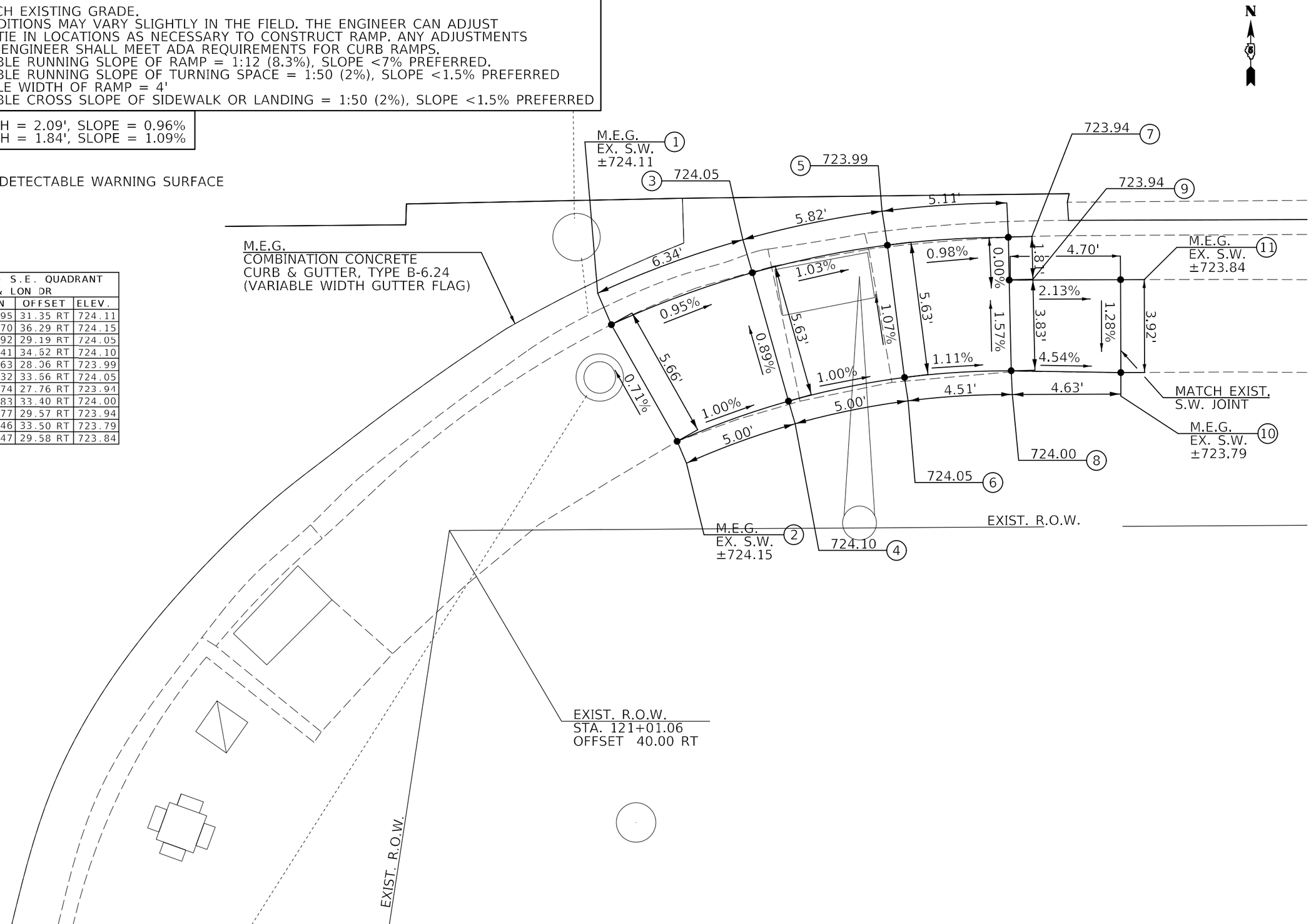

USER NAME = Tyler.Pierson	DESIGNED -	REVISED -	STATE OF ILLINOIS DEPARTMENT OF TRANSPORTATION
	DRAWN -	REVISED -	
PLOT SCALE = 4.0000 ' / in.	CHECKED -	REVISED -	
PLOT DATE = 1/26/2023	DATE -	REVISED -	

ADA DETAIL – LOCATION 5 SE QUADRANT
US 136 & LON DR

SCALE: 1" = 2' | SHEET 5 OF 5 SHEETS | STA. TO STA.

F.A.P. RTE.	SECTION	COUNTY	TOTAL SHEETS	SHEET NO.
709	(113)RS-7	CHAMPAIGN	103	80
		CONTRACT NO. 70944		
	ILLINOIS	FED. AID PROJECT		

MODEL: $MODELNAME$
FILE NAME: pw:\\ildot-pw.bentley.com:PWIDOT\Documents\IDOT Offices\District 5\Projects\D570944\CADData\CADsheets\D570944-sh-Detail-ADA_Ramps.dgn

PROJECTS WITHOUT RECONSTRUCTION

S.M.A.R.T. IMPROVEMENTS
(ALSO CONTRACT MAINTENANCE)

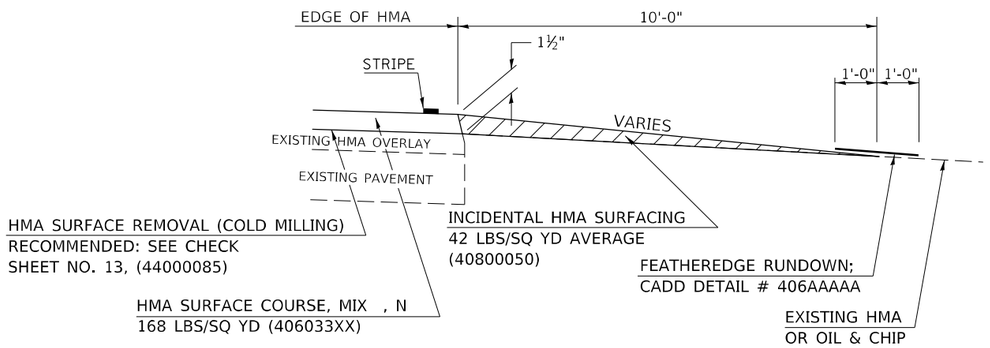

"3P" OR "3R" IMPROVEMENTS

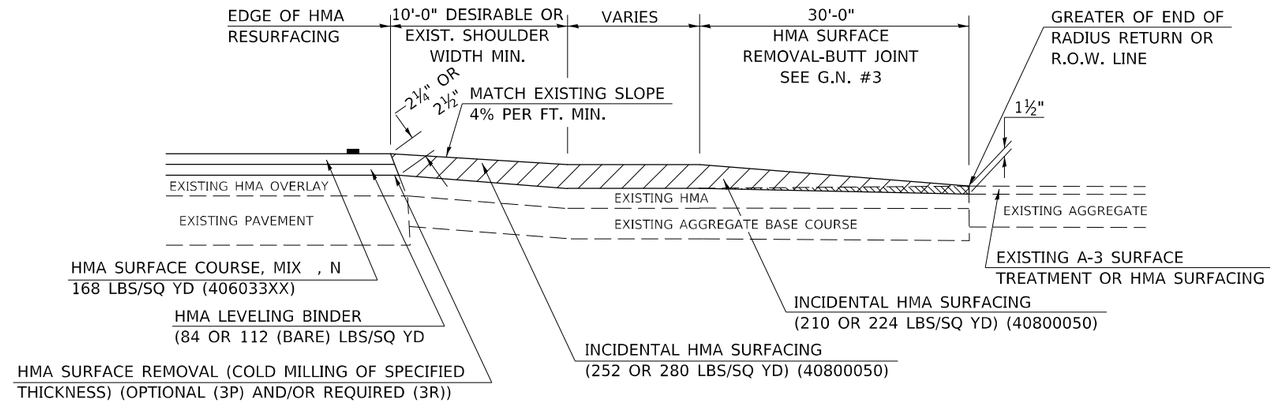

PROJECTS WITH RECONSTRUCTION
("3R" IMPROVEMENTS)

WITH HMA SHOULDER

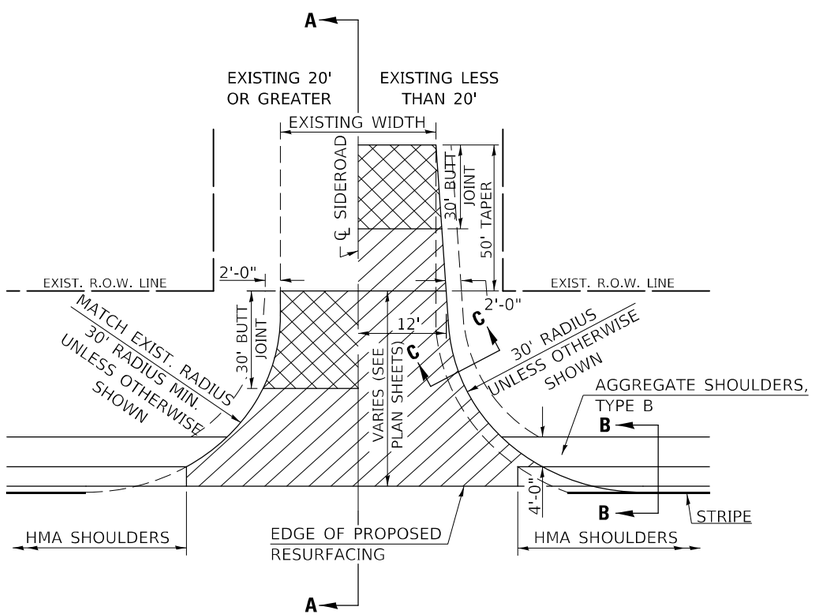

WITHOUT HMA SHOULDER

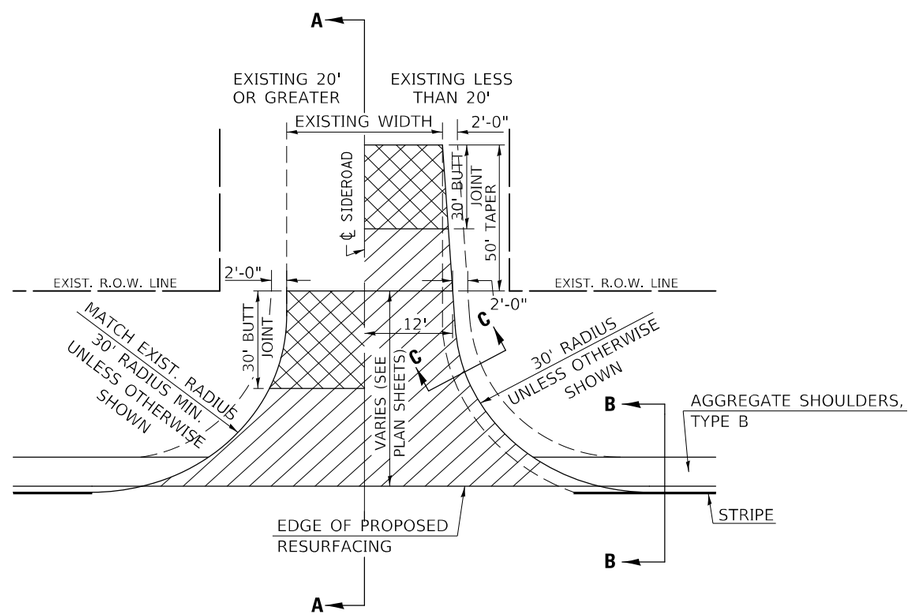

GENERAL NOTES

1. THE EXISTING SURFACE SHALL BE PREPARED IN ACCORDANCE WITH SECTION 408 OF THE STANDARD SPECIFICATIONS
2. PROPOSED SIDEROAD GRADES SHALL BE AS SHOWN IN THE PLANS AND/OR AS DIRECTED BY THE ENGINEER.
3. MAJOR SIDEROAD/SIDESTREETS (>400 ADT) SHALL HAVE "BUTT JOINTS" CONSTRUCTED WHETHER THE EXISTING ENTRANCE IS HMA OR PCC. MINOR SIDEROAD/SIDESTREETS (<400 ADT) SHALL HAVE "FEATHEREDGE RUNDOWNS".
4. AGGREGATE BASE COURSE, TYPE B OF THE THICKNESS SPECIFIED IN THE PLANS 6" MIN. SHALL BE USED WHERE IN THE OPINION OF THE ENGINEER THERE IS NOT 6" EXISTING BASE MATERIAL FOR THE PROPOSED SIDEROAD RETURNS. THIS MATERIAL SHALL BE USED TO WIDEN SIDEROAD RETURNS.
5. THE AGGREGATE BASE COURSE SHALL BE CONSTRUCTED 1' WIDER THAN THE SURFACE DIMENSIONS.
6. AGGREGATE SHOULDERS, TYPE B WILL BE WRAPPED AROUND THE SIDEROAD RETURNS. TAPER WIDTH FROM 4' ALONG MAINLINE TO 2' AT BACK OF RETURN.

Note: All dimensions are in INCHES (millimeters) unless otherwise shown.

DISTRICT 5 DETAIL NO. 408000AA

USER NAME = Tyler.Pierson	DESIGNED -	REVISED - 12/06 TJB	
	DRAWN -	REVISED - 09/07 KAG	
PLOT SCALE = 40.0000 ' / in.	CHECKED -	REVISED - 12/09 KJT	
PLOT DATE = 1/26/2023	DATE -	REVISED -	

STATE OF ILLINOIS
DEPARTMENT OF TRANSPORTATION

SIDEROAD & SIDESTREETS (RURAL)

SCALE: N.T.S. | SHEET 1 OF 2 SHEETS | STA. TO STA.

F.A.P. RTE.	SECTION	COUNTY	TOTAL SHEETS	SHEET NO.
709	(113)RS-7	CHAMPAIGN	103	81

CONTRACT NO. 70944

ILLINOIS | FED. AID PROJECT

MODEL: $MODELNAME
FILE NAME: pw:\\ildot-pw.bentley.com:PWIDOT\Documents\IDOT Offices\District 5\Projects\D570944\CADData\CADsheets\D570944-sht-Detail-05 Details.dgn

SECTION A–A
EXISTING HMA OR PCC SIDEROAD (>400 ADT)

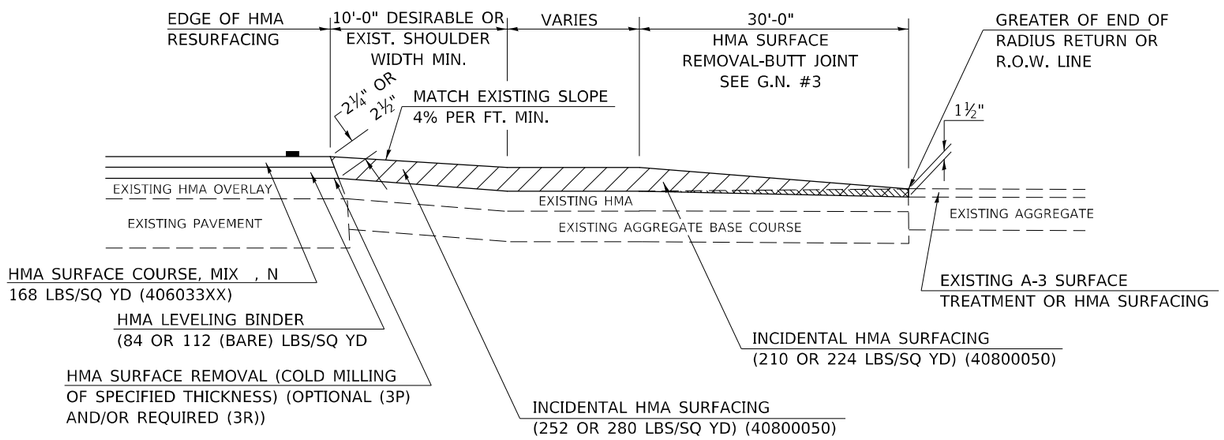

RURAL SIDEROAD DESIGN STANDARDS (PPM 40-06)									
	New Construction & 3R (Existing Width Less Than 20 ft)			3R (Existing Width 20 ft or Greater) & 3P			SMART & Contract Maintenance		
DESIGN ELEMENT	min.	des.	max.	min.	des.	max.	min.	des.	max.
SURFACE WIDTH (FT); (Measured at end of radius or row line; greatest distance from edge of traveled way)	24	24	Coordinate with Geometrics Engineer	Resurface existing configuration to completion of radius return or row line; greatest distance from edge of traveled way; major sideroads (> 400 adt) shall have "butt joints" constructed whether the entrance is hma or pcc; minor sideroads (< 400 adt) shall have "featheredge rundown" as shown in district cadd detail 406AAAA			resurface existing configuration with the completion of a 10 ft. featheredge rundown for ALL sideroads as shown in district cadd detail 406AAAAA		
RADIUS (FT)	30	30							
SHOULDER WIDTH (FT)	4	8	10						
SHOULDER SLOPE (%)	2	4	12						
ENTRANCE GRADE (%)	1	1 to 4	4						
BREAKOVER (%)	0	5	10						
SIDE SLOPE (FT)	1:10	1:6	1:4						
INTERSECTION ANGLE	60	75 to 90							
SURFACE TYPE									
INCIDENTAL HMA SURFACING (INCH)	4			taper from 2 1/4" to 1 1/2" or featheredge			taper from 1 1/2" to featheredge		
AGGREGATE BASE COURSE, TYPE A (INCH)	8	4		if applicable use item: 35800100 Preparation of Base					
PCC PAVEMENT (INCH)		8							

SECTION A–A
EXISTING AGGREGATE OR SEAL COAT SIDEROAD (<400 ADT)

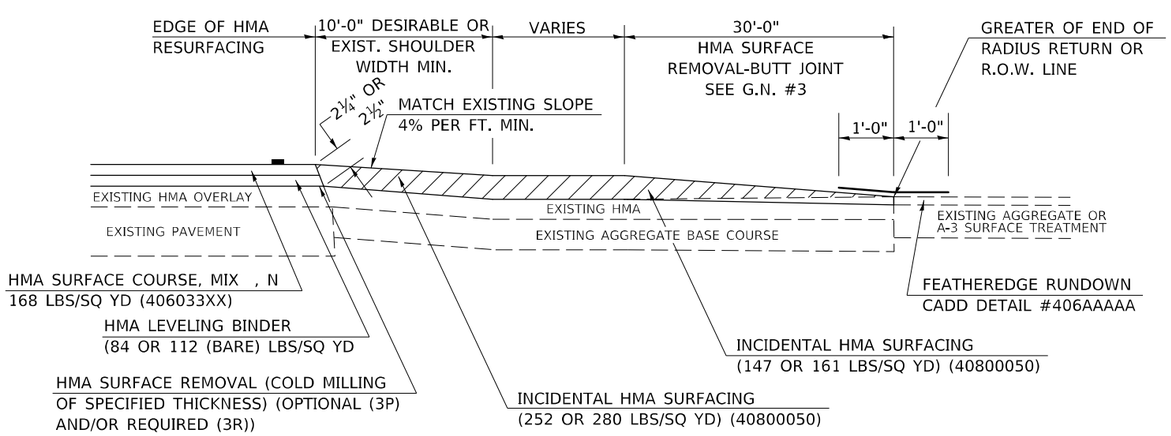

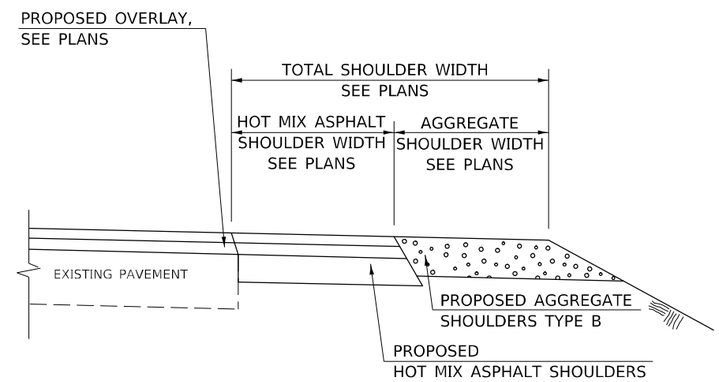

SECTION B–B
MAINLINE SHOULDER TREATMENT

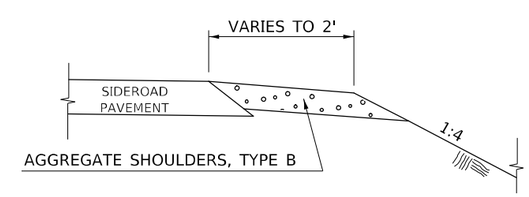

SECTION C–C
SIDEROAD SHOULDER TREATMENT

Note: All dimensions are in INCHES (millimeters) unless otherwise shown.

DISTRICT 5 DETAIL NO. 408000AA

F.A.P. RTE.	SECTION	COUNTY	TOTAL SHEETS	SHEET NO.
709	(113)RS-7	CHAMPAIGN	103	82
		CONTRACT NO. 70944		
		ILLINOIS	FED. AID PROJECT	

USER NAME = Tyler.Pierson	DESIGNED -	REVISED - 12/06 TJB	
	DRAWN -	REVISED - 09/07 KAG	
PLOT SCALE = 40.0000 ' / in.	CHECKED -	REVISED - 12/09 KJT	
PLOT DATE = 1/26/2023	DATE -	REVISED -	

STATE OF ILLINOIS
DEPARTMENT OF TRANSPORTATION

SIDEROAD & SIDESTREETS (RURAL)

SCALE: N.T.S. | SHEET 2 OF 2 SHEETS | STA. TO STA.

MODEL: $MODELNAME$
FILE NAME: pw:\\ildot-pw.bentley.com:PWIDOT\Documents\IDOT Offices\District 5\Projects\D570944\CADData\CADsheets\D570944-sht-Detail-D5 Details.dgn

PROJECTS WITHOUT RECONSTRUCTION

("3R" WITHOUT RECONSTRUCTION, 3P, SMART AND CM)

S.M.A.R.T. IMPROVEMENTS

(POLICY RESURFACING; BDE 53–4.03; 1½")

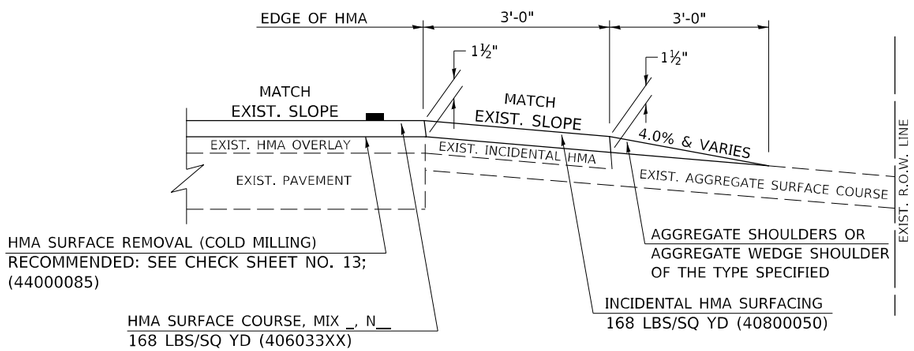

"3P" OR "3R" IMPROVEMENTS

(POLICY RESURFACING; BDE 53–4.02; 2¼" OR 2½" ON BARE CONCRETE)

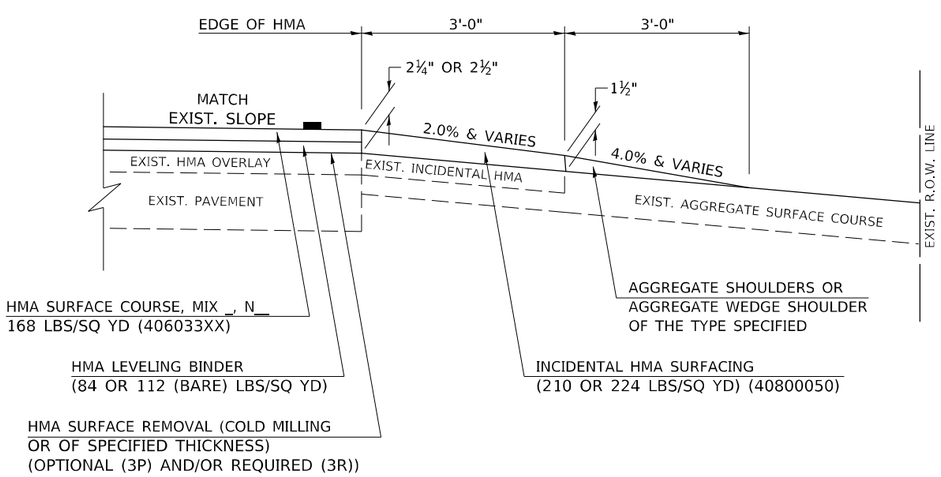

PROJECTS WITH RECONSTRUCTION

("3R" IMPROVEMENTS AND SMART/3P "SPOT" LOCATIONS)

ADJACENT TO PROPOSED HMA SHOULDERS

(AGGREGATE OR EARTH ENTRANCE)

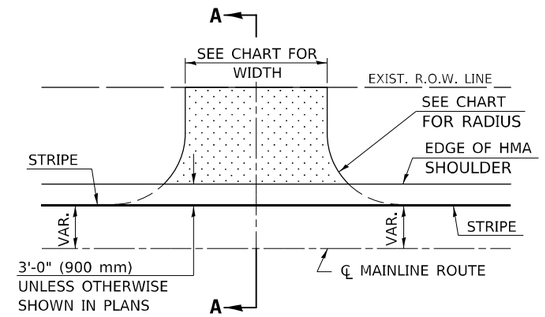

TYPICAL APPLICATION

EXISTING AGGREGATE OR EARTH ENTRANCE

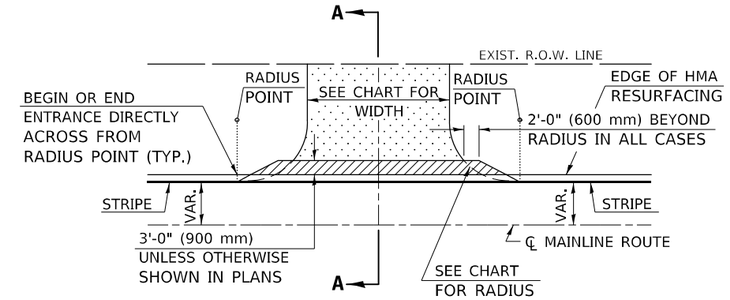

TYPICAL APPLICATION

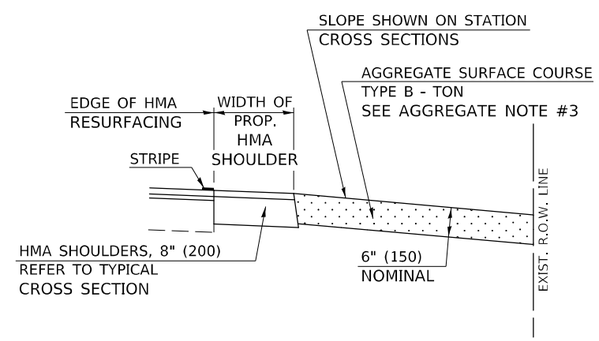

SECTION A–A

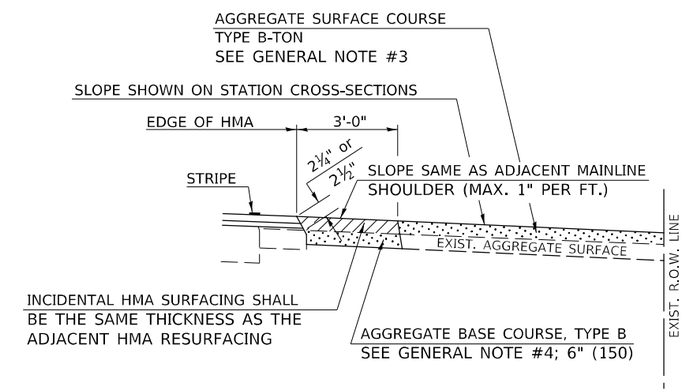

SECTION A–A

Note: All dimensions are in INCHES (millimeters) unless otherwise shown.

DISTRICT 5 DETAIL NO. 40800050A

F.A.P. RTE.	SECTION	COUNTY	TOTAL SHEETS	SHEET NO.
709	(113)RS-7	CHAMPAIGN	103	83
		CONTRACT NO. 70944		
		ILLINOIS	FED. AID PROJECT	

USER NAME = Tyler.Pierson	DESIGNED -	REVISED -	9/2007 KAG
	DRAWN -	REVISED -	4/2008 KJT
PLOT SCALE = 40.0000 ' / in.	CHECKED -	REVISED -	3/2017 SWN
PLOT DATE = 1/26/2023	DATE -	REVISED -	8/2022 JWS

STATE OF ILLINOIS
DEPARTMENT OF TRANSPORTATION

FIELD ENTRANCES (NONCOMMERCIAL RURAL)

SCALE: N.T.S. | SHEET 1 OF 2 SHEETS | STA. TO STA.

MODEL: $MODELNAME$
FILE NAME: pw:\\ildot-pw.bentley.com:PWIDOT\Documents\IDOT Offices\District 5\Projects\D570944\CADData\CADsheets\D570944-sht-Detail05 Details.dgn

RURAL ENTRANCE DESIGN STANDARDS (PPM 40-09)															
	NEW CONSTRUCTION & 3R with CONSTRUCTION								3R w/out RECONSTRUCTION, 3P, SMART & CM						
	NONCOMMERCIAL								NONCOMMERCIAL						
	PRIVATE & FIELD			FIELD W/FARM IMPLEMENTS		COMMERCIAL			PRIVATE & FIELD			COMMERCIAL			
DESIGN ELEMENT	min.	des.	max.	min.	max.	min.	des.	max.	min.	des.	max.	min.	des.	max.	
SURFACE WIDTH (FT)	12	16	24	24	30	1 LANE, 1 WAY						1 LANE, 1 WAY			
						14	16	24							
						2 LANE, 2 WAY						2 LANE, 2 WAY			
						24	30	35							
RADIUS (FT)	15	25	40	30		20	30	50	resurface existing configuration; existing aggregate or earth entrances shall have the continuation of aggregate shoulders placed behind them						
SHOULDER WIDTH (FT)	2	2		2		1	3								
SHOULDER SLOPE (%)	2	4	6	4		2	4	6							
ENTRANCE GRADE (%)	0	2 to 5	10 or 12	2 to 5	10 or 12	0	2 to 5	8 or 10							
SIDE SLOPE (FT)	1:4	1:6	1:10	1:4	1:6	1:4	1:6	1:10							
SURFACE TYPE															
INCIDENTAL HMA SURFACING (INCH)		2		2		3 or 4			taper from hma resurfacing thickness (2 1/2", 2 1/4" or 1 1/2") to 1 1/2" to minimize aggregate shoulder						
AGGREGATE SURFACE COURSE, TYPE B (INCH)		6		6		8			if applicable, use items: Preparation of Base & Aggregate Base Repair; see PPM 30-02						
PCC DRIVEWAY PAVEMENT (INCH)		6						6 or 8							

GENERAL NOTES

1. THE EXISTING SURFACE SHALL BE PREPARED IN ACCORDANCE WITH SECTION 408 OF THE STANDARD SPECIFICATIONS.
2. ANY NECESSARY WORK BEHIND THE HMA SHOULDER OR THE INCIDENTAL HMA SURFACING SHALL BE AS SHOWN IN THE PLANS AND/OR AS DIRECTED BY THE ENGINEER.
3. EARTH EXCAVATION REQUIRED FOR THE CONSTRUCTION OF THE AGGREGATE SURFACE COURSE SHALL BE INCLUDED IN THE COST OF AGGREGATE SURFACE COURSE.
4. AGGREGATE BASE COURSE, TYPE B, 6" (150 mm) MIN. SHALL BE USED WHERE IN THE OPINION OF THE ENGINEER THERE IS NOT SUFFICIENT BASE MATERIAL FOR THE PROPOSED ENTRANCES. THIS MATERIAL SHALL GENERALLY BE USED TO WIDEN ANY EXISTING RETURN OR TO CONSTRUCT NEW ENTRANCES WHERE NONE NOW EXISTS.
5. THE AGGREGATE BASE COURSE SHALL BE CONSTRUCTED 12" (300 mm) WIDER THAN THE SURFACE DIMENSIONS AS SHOWN ABOVE.
6. EXISTING FIELD ENTRANCES OF AGGREGATE OR EARTH WITH NO HMA APRON SHALL NOT RECEIVE A NEW HMA APRON WITHOUT PROPER APPROVAL THROUGH THE BUREAU OF OPERATIONS "POLICY ON PERMITS FOR ACCESS DRIVEWAYS TO STATE HIGHWAYS".
7. TO ASSURE APPROPRIATE ACCESS POLICIES ARE FOLLOWED ALL NEW ACCESS SHALL BE APPLIED FOR THROUGH THE BUREAU OF OPERATIONS PERMIT APPLICATION PROCESS. PLAN PREPARATION MEMORANDUMS 40-09 ALONG WITH DISTRICT PROJECT IMPLEMENTATION MEMORANDUM 104/01 DISCUSS THIS PROCEDURE.

Note: All dimensions are in INCHES (millimeters) unless otherwise shown.

DISTRICT 5 DETAIL NO. 40800050A

USER NAME = Tyler.Pierson	DESIGNED -	REVISED - 9/2007 KAG	**STATE OF ILLINOIS DEPARTMENT OF TRANSPORTATION**
	DRAWN -	REVISED - 4/2008 KJT	
PLOT SCALE = 40.0000 ' / in.	CHECKED -	REVISED - 3/2017 SWN	
PLOT DATE = 1/26/2023	DATE -	REVISED - 8/2022 JWS	

FIELD ENTRANCES (NONCOMMERCIAL RURAL)

SCALE: N.T.S. | SHEET 2 OF 2 SHEETS | STA. TO STA.

F.A.P. RTE.	SECTION	COUNTY	TOTAL SHEETS	SHEET NO.
709	(113)RS-7	CHAMPAIGN	103	84

CONTRACT NO. 70944

ILLINOIS | FED. AID PROJECT

MODEL: $MODELNAME$
FILE NAME: pw:\\ildot-pw.bentley.com:PWIDOT\Documents\IDOT Offices\District 5\Projects\D570944\CADData\CADsheets\D570944-sht-Detail-D5 Details.dgn

PROJECTS WITHOUT RECONSTRUCTION

S.M.A.R.T. IMPROVEMENTS
(POLICY RESURFACING; BDE 53–4.03; 1½")

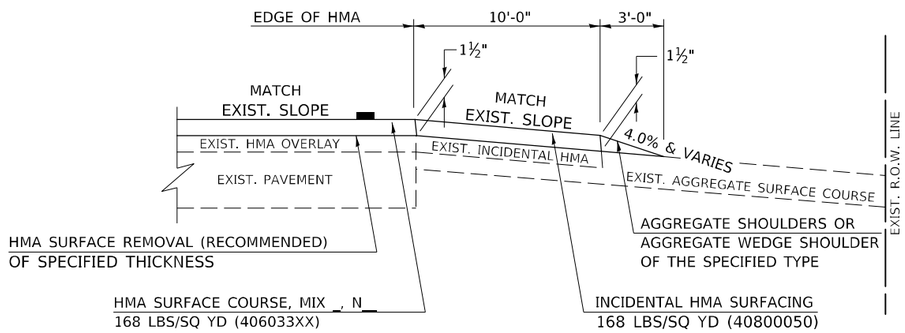

EXISTING AGGREGATE ENTRANCE

"3P" OR "3R" IMPROVEMENTS
(POLICY RESURFACING; BDE 53–4.02; 2¼" OR 2½" ON BARE CONCRETE)

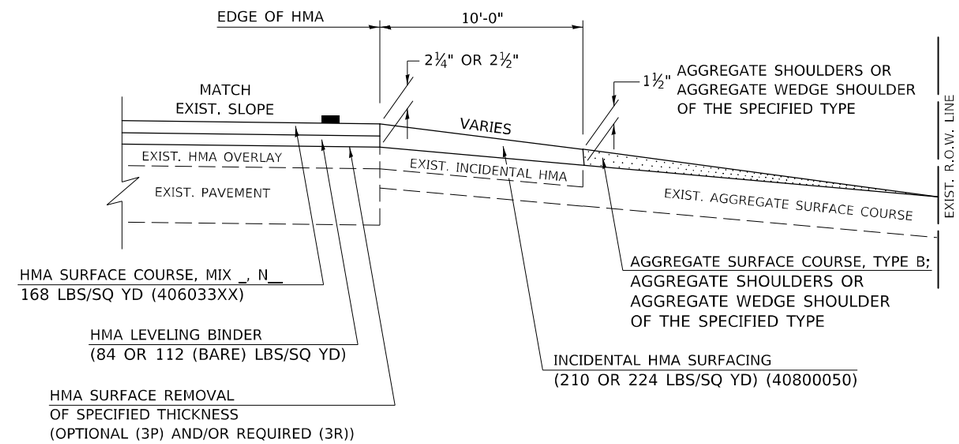

EXISTING AGGREGATE ENTRANCE

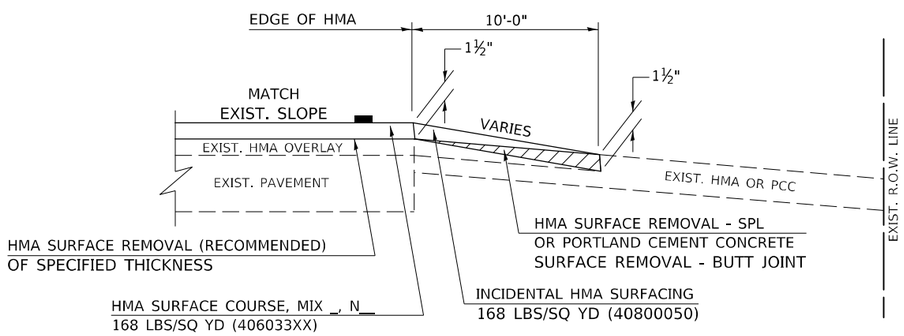

EXISTING HMA OR PCC ENTRANCE

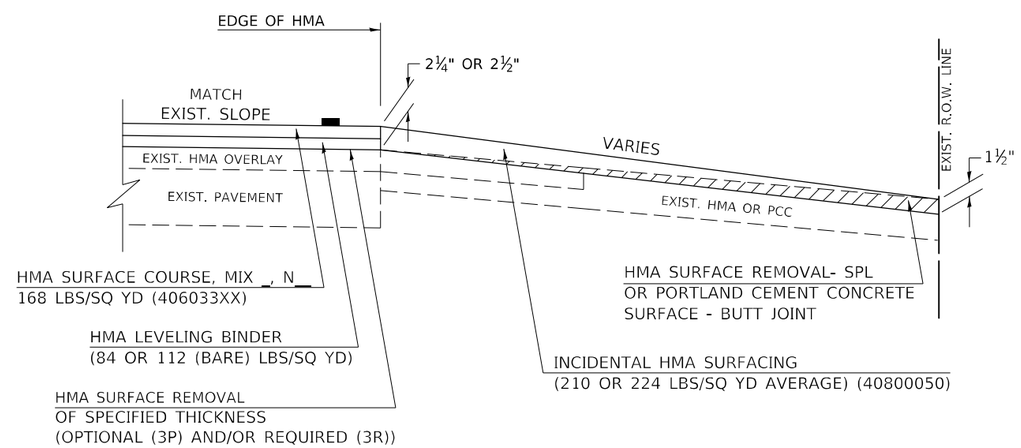

EXISTING HMA OR PCC ENTRANCE

Note: All dimensions are in INCHES
(millimeters) unless otherwise shown.

DISTRICT 5 DETAIL NO. 40800050C

USER NAME = Tyler.Pierson	DESIGNED -	REVISED -	09/07 KAG
	DRAWN -	REVISED -	05/08 KJT
PLOT SCALE = 40.0000 ' / in.	CHECKED -	REVISED -	04/10 KJT
PLOT DATE = 1/26/2023	DATE -	REVISED -	3/6/17 SWN

STATE OF ILLINOIS
DEPARTMENT OF TRANSPORTATION

PRIVATE COMMERCIAL ENTRANCES
(NONCOMMERCIAL AND COMMERCIAL RURAL)

SCALE: N.T.S. | SHEET 1 OF 2 SHEETS | STA. TO STA.

F.A.P. RTE.	SECTION	COUNTY	TOTAL SHEETS	SHEET NO.
709	(113)RS-7	CHAMPAIGN	103	85
		CONTRACT NO. 70944		
		ILLINOIS	FED. AID PROJECT	

MODEL: $MODELNAME$
FILE NAME: pw:\\ildot-pw.bentley.com:PWIDOT\Documents\IDOT Offices\District 5\Projects\D570944\CADData\CADsheets\D570944-sht-Details-D5 Details.dgn

PROJECTS WITH RECONSTRUCTION

(3R IMPROVEMENTS)

AGGREGATE ENTRANCE

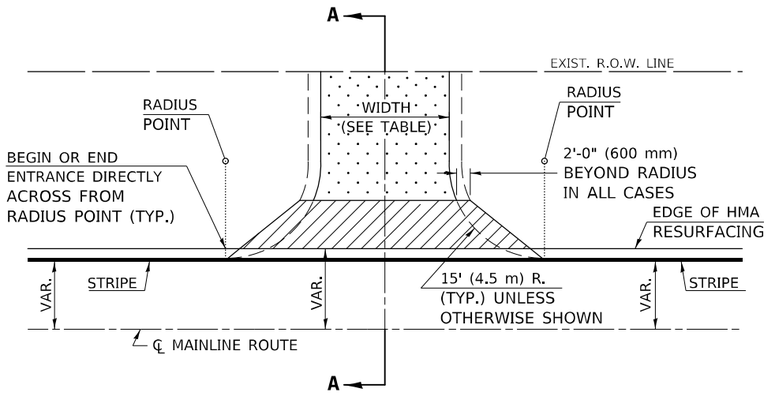

TYPICAL APPLICATION

HMA OR PCC ENTRANCE

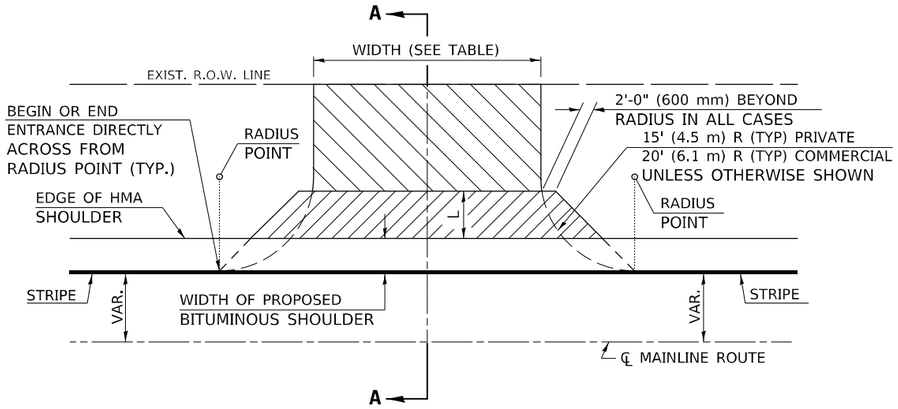

TYPICAL APPLICATION

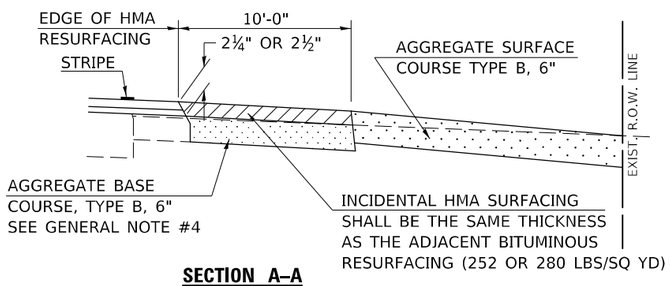

SECTION A–A

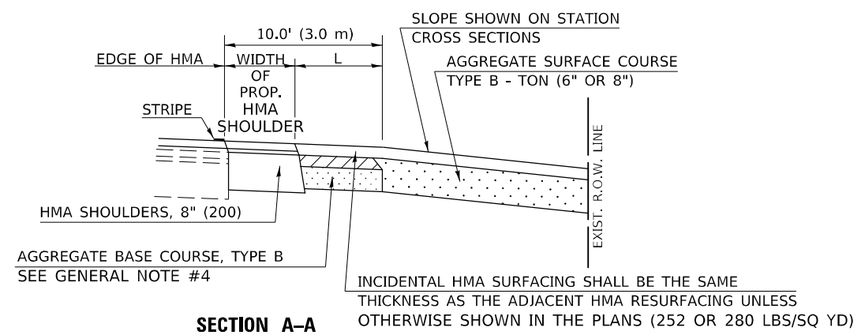

SECTION A–A
"HMA EXAMPLE"

RURAL ENTRANCE DESIGN STANDARDS (PPM 40-09)														
	NEW CONSTRUCTION & 3R with CONSTRUCTION								3R w/out RECONSTRUCTION, 3P, SMART & CM					
	NONCOMMERCIAL					COMMERCIAL			NONCOMMERCIAL			COMMERCIAL		
	PRIVATE & FIELD			FIELD W/FARM IMPLEMENTS					PRIVATE & FIELD					
DESIGN ELEMENT	min.	des.	max.	min.	max.	min.	des.	max.	min.	des.	max.	min.	des.	max.
SURFACE WIDTH (FT)	12	16	24	24	30	1 LANE, 1 WAY						1 LANE, 1 WAY		
						14	16	24						
						2 LANE, 2 WAY						2 LANE, 2 WAY		
						24	30	35						
RADIUS (FT)	15	25	40	30		20	30	50	resurface existing configuration; existing aggregate or earth entrances shall have the continuation of aggregate shoulders placed behind them					
SHOULDER WIDTH (FT)	2	2		2		1	3							
SHOULDER SLOPE (%)	2	4	6	4		2	4	6						
ENTRANCE GRADE (%)	0	2 to 5	10 or 12	2 to 5	10 or 12	0	2 to 5	8 or 10						
SIDE SLOPE (FT)	1:10	1:6	1:4	1:6	1:4	1:10	1:6	1:4						
SURFACE TYPE														
INCIDENTAL HMA SURFACING (INCH)		2		2		3 or 4			taper from hma resurfacing thickness (2 1/2", 2 1/4" or 1 1/2") to 1 1/2" to minimize aggregate shoulder					
AGGREGATE SURFACE COURSE, TYPE B (INCH)		6		6		8			if applicable, use items: Preparation of Base & Aggregate Base Repair; see PPM 30-02					
PCC DRIVEWAY PAVEMENT (INCH)		6						6 or 8						

GENERAL NOTES

1. THE EXISTING SURFACE SHALL BE PREPARED IN ACCORDANCE WITH SECTION 408 OF THE STANDARD SPECIFICATIONS.
2. ANY NECESSARY WORK BEHIND THE HMA SHOULDER OR THE INCIDENTAL HMA SURFACING SHALL BE AS SHOWN IN THE PLANS AND/OR AS DIRECTED BY THE ENGINEER.
3. EARTH EXCAVATION REQUIRED FOR THE CONSTRUCTION OF THE AGGREGATE SURFACE COURSE SHALL BE INCLUDED IN THE COST OF AGGREGATE SURFACE COURSE.
4. AGGREGATE BASE COURSE, TYPE B, 6" (150 mm) MIN. SHALL BE USED WHERE IN THE OPINION OF THE ENGINEER THERE IS NOT SUFFICIENT BASE MATERIAL FOR THE PROPOSED ENTRANCES. THIS MATERIAL SHALL GENERALLY BE USED TO WIDEN ANY EXISTING RETURN OR TO CONSTRUCT NEW
5. ENTRANCES WHERE NONE NOW EXISTS.
6. THE AGGREGATE BASE COURSE SHALL BE CONSTRUCTED 12" (300 mm) WIDER THAN THE SURFACE DIMENSIONS AS SHOWN ABOVE.
7. EXISTING FIELD ENTRANCES OF AGGREGATE OR EARTH WITH NO HMA APRON SHALL NOT RECEIVE A NEW HMA APRON WITHOUT PROPER APPROVAL THROUGH THE BUREAU OF OPERATIONS "POLICY ON PERMITS FOR ACCESS DRIVEWAYS TO STATE HIGHWAYS".

   TO ASSURE APPROPRIATE ACCESS POLICIES ARE FOLLOWED ALL NEW ACCESS SHALL BE APPLIED FOR THROUGH THE BUREAU OF OPERATIONS PERMIT APPLICATION PROCESS. PLAN PREPARATION MEMORANDUMS 40-09 ALONG WITH DISTRICT PROJECT IMPLEMENTATION MEMO 104/01 DISCUSS THIS PROCEDURE.

Note: All dimensions are in INCHES (millimeters) unless otherwise shown.

DISTRICT 5 DETAIL NO. 40800050C

USER NAME = Tyler.Pierson	DESIGNED -	REVISED - 09/07 KAG	STATE OF ILLINOIS DEPARTMENT OF TRANSPORTATION
	DRAWN -	REVISED - 05/08 KJT	
PLOT SCALE = 40.0000 ' / in.	CHECKED -	REVISED - 04/10 KJT	
PLOT DATE = 1/26/2023	DATE -	REVISED - 3/6/17 SWN	

PRIVATE COMMERCIAL ENTRANCES (NONCOMMERCIAL AND COMMERCIAL RURAL)

SCALE: N.T.S. | SHEET 2 OF 2 SHEETS | STA. TO STA.

F.A.P. RTE.	SECTION	COUNTY	TOTAL SHEETS	SHEET NO.
709	(113)RS-7	CHAMPAIGN	103	86

CONTRACT NO. 70944

ILLINOIS | FED. AID PROJECT

MODEL: $MODELNAME
FILE NAME: pw:\\ildot-pw.bentley.com:PWIDOT\Documents\IDOT Offices\District 5\Projects\D570944\CADData\CADsheets\D570944-sht-Detail-05 Details.dgn

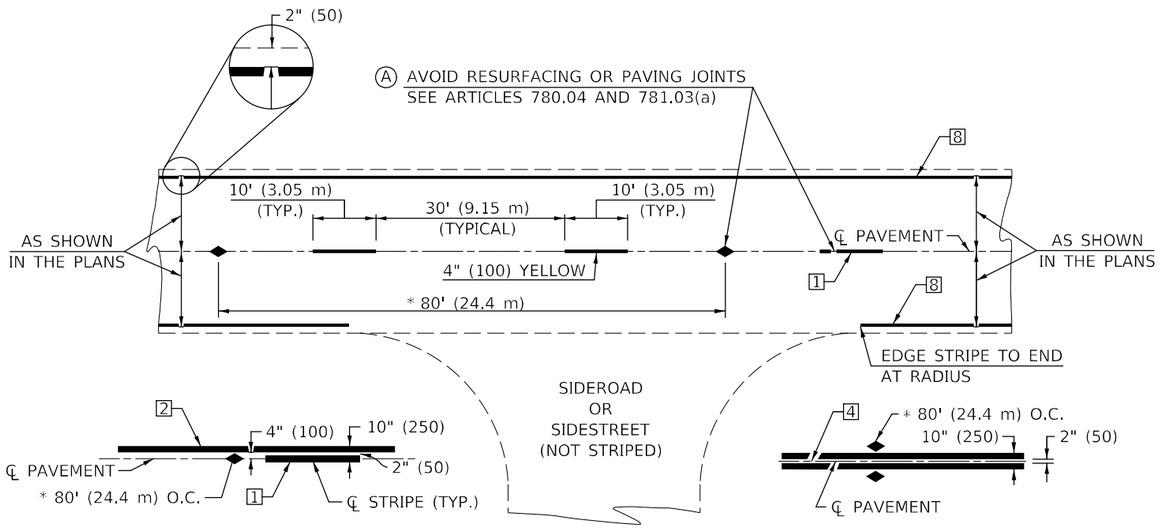

SINGLE NO PASSING

DOUBLE NO PASSING

* REDUCE TO 40' (12.2 m) O.C. ON CURVES WITH POSTED OR ADVISORY SPEEDS OF 45 mph (70 km/h) OR LESS.

TWO LANE/TWO WAY

TYPICAL PAVEMENT MARKING LEGEND

1. 4" (100) SKIP-DASH (YELLOW)
2. 4" (100) SOLID (YELLOW)
3. 12" (300) DIAGONAL (YELLOW)
4. 4" (100) DOUBLE YELLOW (NARROW)
5. RESERVED
6. RESERVED
7. 4" (100) SKIP-DASH (WHITE)
8. 4" (100) SOLID (WHITE)
9. 12" (300) DIAGONAL (WHITE)
10. 6" (150) SOLID (WHITE)
11. 24" (600) STOP BAR (WHITE)
12. 8" (200) SOLID (WHITE)
13. 4" (100) LANE LINE EXTENSIONS (WHITE)
14. 4" (100) PARKING WHITE

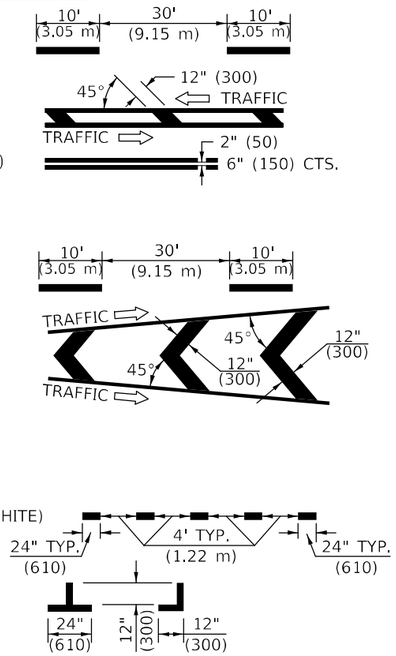

TYPICAL PAVEMENT MARKERS LEGEND

- ◆ TWO-WAY AMBER MARKER
- ▶ ONE-WAY AMBER MARKER
- ▷ ONE-WAY CRYSTAL MARKER

RURAL LEFT TURN

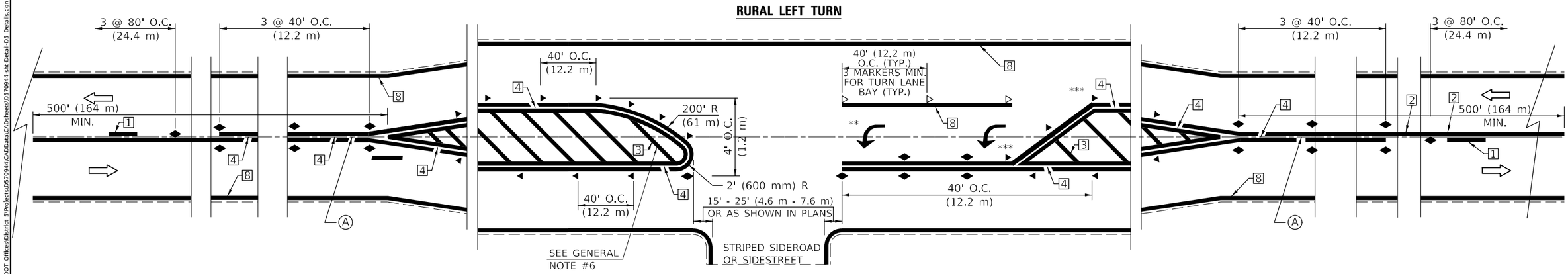

*** REDUCE SPACING IF NECESSARY TO ASSURE MARKERS AT CORNER POINTS.

** TURN ARROWS SHALL BE PLACED AS SHOWN ON SHEET #2.

Note: All dimensions are in INCHES (millimeters) unless otherwise shown.

DISTRICT 5 DETAIL NO. 7800AAAA

USER NAME = Tyler.Pierson	DESIGNED -	REVISED -	4/2014 JLA	STATE OF ILLINOIS DEPARTMENT OF TRANSPORTATION	PAVEMENT MARKING AND MARKERS (RURAL & URBAN APPLICATIONS)
	DRAWN -	REVISED -	3/2019 SWN		
PLOT SCALE = 40.0000 ' / in.	CHECKED -	REVISED -	8/2022 JLA		
PLOT DATE = 1/26/2023	DATE -	REVISED -	9/2022 JWS		SCALE: N.T.S. SHEET 1 OF 4 SHEETS STA. TO STA.

F.A.P. RTE.	SECTION	COUNTY	TOTAL SHEETS	SHEET NO.
709	(113)RS-7	CHAMPAIGN	103	87
		CONTRACT NO. 70944		
		ILLINOIS FED. AID PROJECT		

MODEL: $MODELNAME$
FILE NAME: pw:\\ildot-pw.bentley.com:PWIDOT\Documents\IDOT Offices\District 5\Projects\D570944\CADData\CADsheets\D570944-sht-Detail05 Detail8.dgn

URBAN LEFT TURN

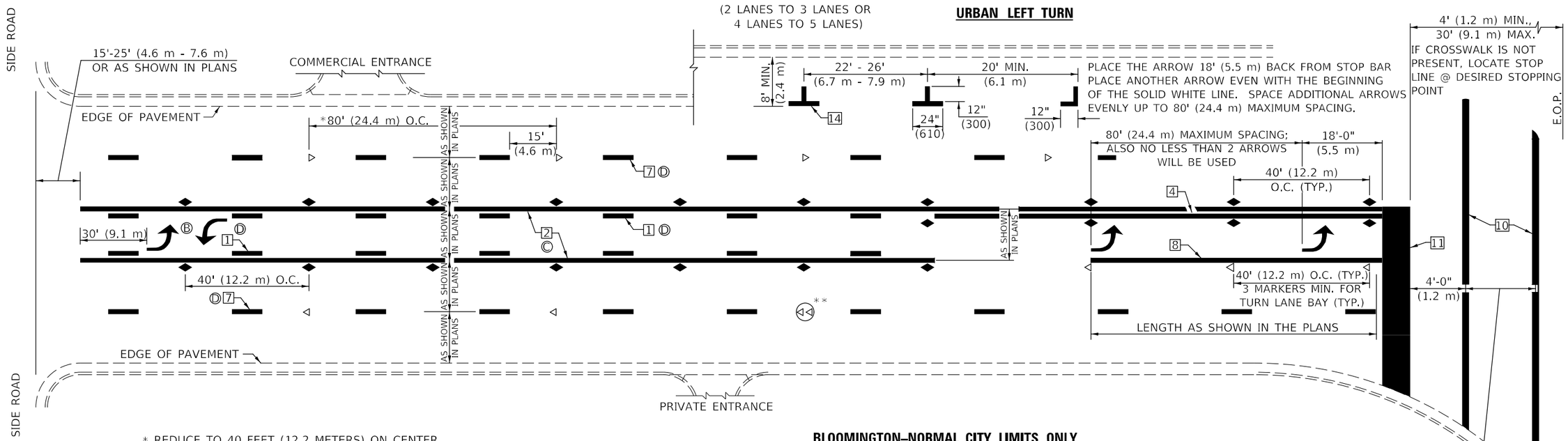

* REDUCE TO 40 FEET (12.2 METERS) ON CENTER ON CURVES WHERE ADVISORY SPEEDS ARE 10 MPH (15 km/h) LOWER THAN POSTED SPEEDS.

** DOUBLE LANE LINE MARKERS SHALL BE SPECIFIED AND SPACED AS SHOWN IN HIGHWAY STANDARD 781001 FOR MULTI-LANE DIVIDED AND UNDIVIDED HIGHWAYS.

GENERAL NOTES:

Ⓑ TURN ARROW PAIRS SHALL BE PLACED AT 250' (75 m) INTERVALS AND SHALL BE EVENLY SPACED BETWEEN BOTH ENDS OF THE BIDIRECTIONAL LEFT TURN LANE.

Ⓒ THE SOLID YELLOW PAVEMENT MARKINGS 2 SHOULD GENERALLY START OR END NEAR THE RADIUS POINT OF EACH STREET RETURN EXCEPT WHERE ONE OR BOTH ENDS WOULD INCLUDE STOP BARS.

Ⓓ THE SKIP-DASH PAVEMENT MARKINGS 1 OR 7 SHOULD BE CENTERED BETWEEN BOTH ENDS OF EACH CITY BLOCK AND SHALL BE PLACED SO THEY LINE UP ACROSS FROM EACH OTHER. SEE EXAMPLE ON SHEET 2 OF 3.

Ⓔ USE LARGE ARROW SIZE FOR BOTH RURAL AND URBAN LOCATIONS. (SEE LAST PAGE OF SECTION 780x FOR SYMBOLS TABLE)

BLOOMINGTON–NORMAL CITY LIMITS ONLY

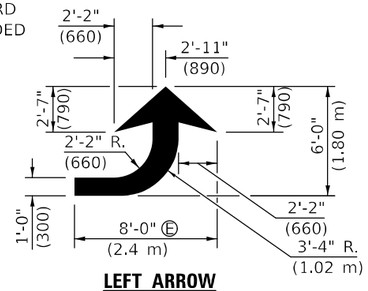

LEFT ARROW

REVERSE FOR RIGHT ARROW
AREA = 15.6 SQ. FT. (1.47 m^2)
(WHITE)

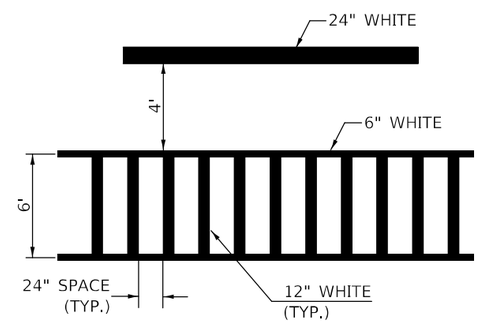

TYPICAL SPACING FOR CROSSWALKS & STOP BARS

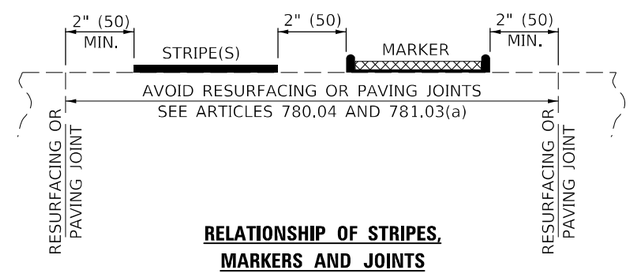

RELATIONSHIP OF STRIPES, MARKERS AND JOINTS

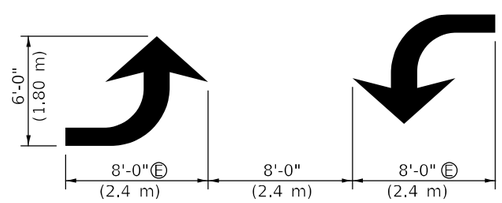

TYPICAL DOUBLE TURN ARROWS (WHITE)

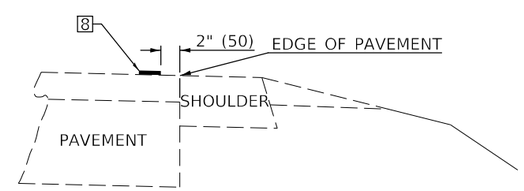

RELATIONSHIP OF EDGE LINE TO EDGE OF PAVEMENT

(SAFETY SHOULDER OR PAVED SURFACE)
SEE ARTICLE 780.04

Note: All dimensions are in INCHES (millimeters) unless otherwise shown.

DISTRICT 5 DETAIL NO. 7800AAAA

USER NAME = Tyler.Pierson	DESIGNED -	REVISED - 4/2014 JLA	STATE OF ILLINOIS DEPARTMENT OF TRANSPORTATION	PAVEMENT MARKING AND MARKERS (RURAL & URBAN APPLICATIONS)	F.A.P. RTE.	SECTION	COUNTY	TOTAL SHEETS	SHEET NO.
	DRAWN -	REVISED - 3/2019 SWN			709	(113)RS-7	CHAMPAIGN	103	88
PLOT SCALE = 40.0000 ' / in.	CHECKED -	REVISED - 8/2022 JLA					CONTRACT NO. 70944		
PLOT DATE = 1/26/2023	DATE -	REVISED - 9/2022 JWS		SCALE: N.T.S. SHEET 2 OF 4 SHEETS STA. TO STA.			ILLINOIS	FED. AID PROJECT	

MODEL: $MODELNAMES
FILE NAME: pw:\\ildot-pw.bentley.com:PWIDOT\Documents\IDOT Offices\District 5\Projects\D570944\CADData\CADsheets\D570944-sht-Detail-D5 Details.dgn

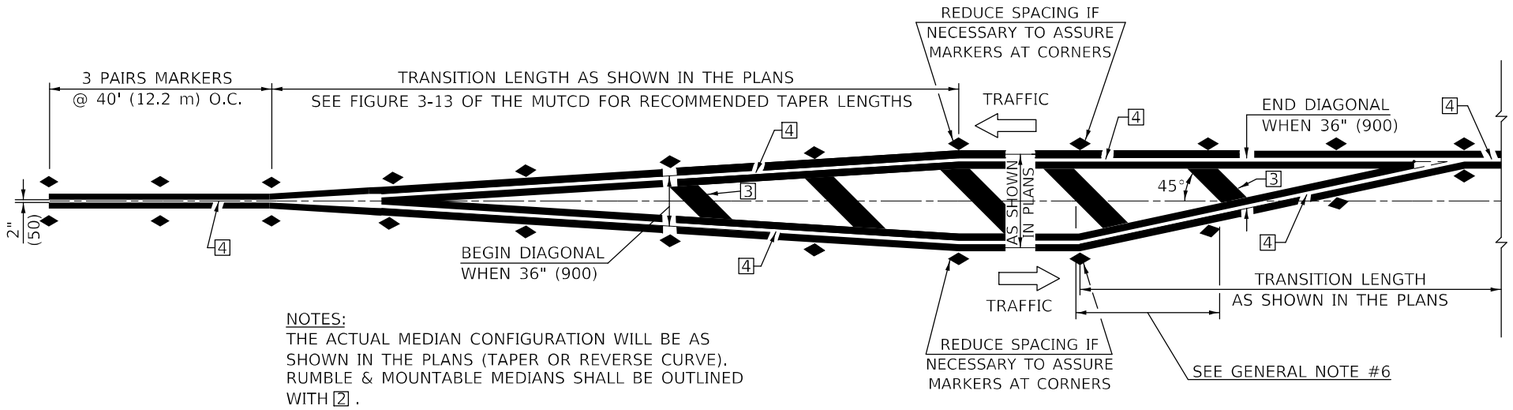

NOTES:
THE ACTUAL MEDIAN CONFIGURATION WILL BE AS SHOWN IN THE PLANS (TAPER OR REVERSE CURVE). RUMBLE & MOUNTABLE MEDIANS SHALL BE OUTLINED WITH 2 .

TYPICAL MEDIAN TRANSITIONS

GENERAL NOTES

1. WHEN MEDIANS ARE PRESENT, PAVEMENT MARKINGS ARE TO BE PLACED ADJACENT TO MEDIANS.
2. SOME OF THE INFORMATION INCLUDED WITH THIS DETAIL MAY NOT BE APPLICABLE TO THIS IMPROVEMENT.
3. PAVEMENT MARKINGS ARE TO BE EXTENDED THROUGH OMISSIONS WHEN APPLICABLE.
4. A STRIPING KEY IS AVAILABLE ELSEWHERE AND SHALL BE SHOWN WHERE THE QUANTITIES ARE LISTED.
5. FINAL PAVEMENT MARKINGS SHALL BE IN PLACE PRIOR TO PLACING ANY RAISED REFLECTIVE PAVEMENT MARKERS.
6. THE FOLLOWING CRITERIA SHALL BE USED FOR SELECTING THE DIAGONAL PAVEMENT MARKING SPACING,
   <30 MPH USE 15' (<50 km/h USE 4.5 m)
   30-45 MPH USE 20' (50-75 km/h USE 6.0 m)
   >45 MPH USE 30' (>75 km/h USE 9.0 m)

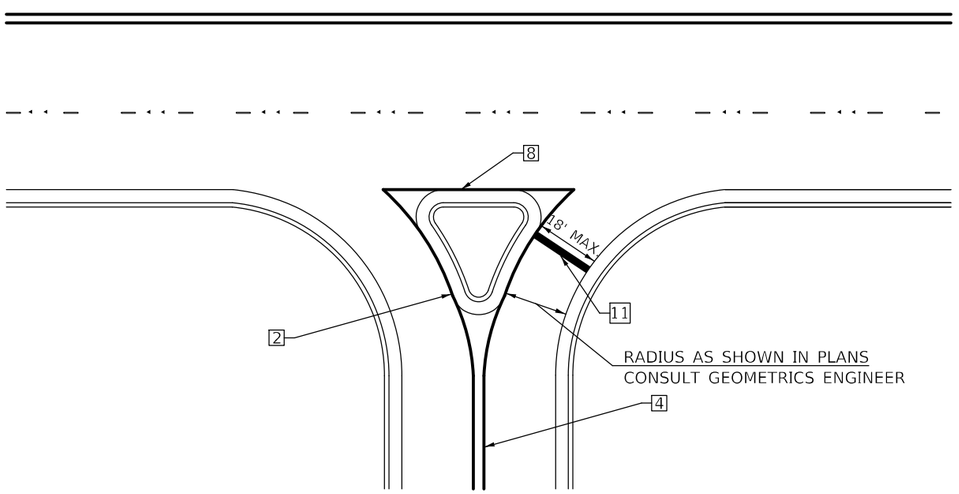

RIGHT IN – RIGHT OUT ACCESS

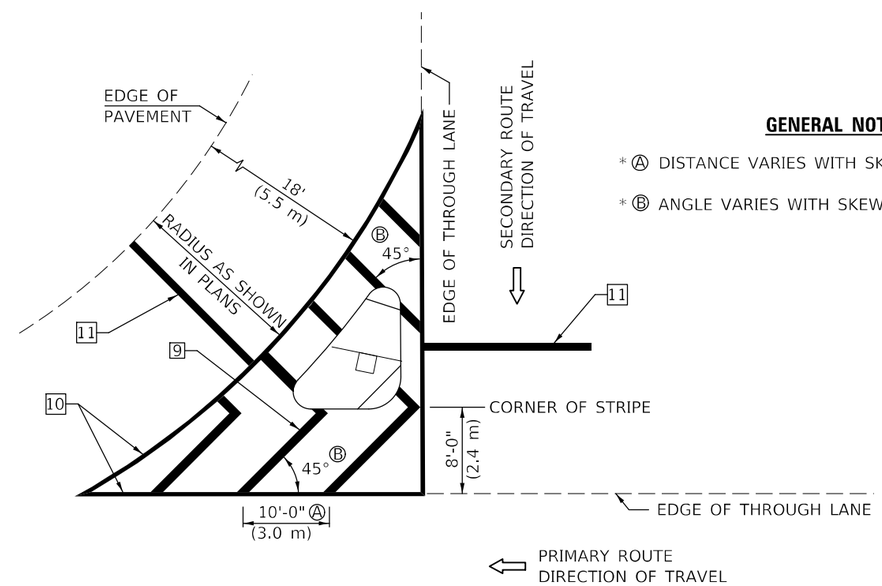

GENERAL NOTES

* Ⓐ DISTANCE VARIES WITH SKEW OF INTERSECTION.
* Ⓑ ANGLE VARIES WITH SKEW OF INTERSECTION.

ISLAND

* FOR RIGHT TURN LANE AND ISLAND STRIPING CONSULT GEOMETRICS ENGINEER.

Note: All dimensions are in INCHES (millimeters) unless otherwise shown.

DISTRICT 5 DETAIL NO. 7800AAAA

F.A.P. RTE.	SECTION	COUNTY	TOTAL SHEETS	SHEET NO.
709	(113)RS-7	CHAMPAIGN	103	89
		CONTRACT NO. 70944		
		ILLINOIS	FED. AID PROJECT	

USER NAME = Tyler.Pierson	DESIGNED -	REVISED -	4/2014 JLA
	DRAWN -	REVISED -	3/2019 SWN
PLOT SCALE = 40.0000 ' / in.	CHECKED -	REVISED -	8/2022 JLA
PLOT DATE = 1/26/2023	DATE -	REVISED -	9/2022 JWS

STATE OF ILLINOIS
DEPARTMENT OF TRANSPORTATION

PAVEMENT MARKING AND MARKERS
(RURAL & URBAN APPLICATIONS)

SCALE: N.T.S. | SHEET 3 OF 4 SHEETS | STA. | TO STA.

MODEL: $MODELNAME$
FILE NAME: pw:\\ildot-pw.bentley.com:PWIDOT\Documents\IDOT Offices\District 5\Projects\D570944\CADData\CADsheets\D570944-sht-Detail-D5 Details.dgn

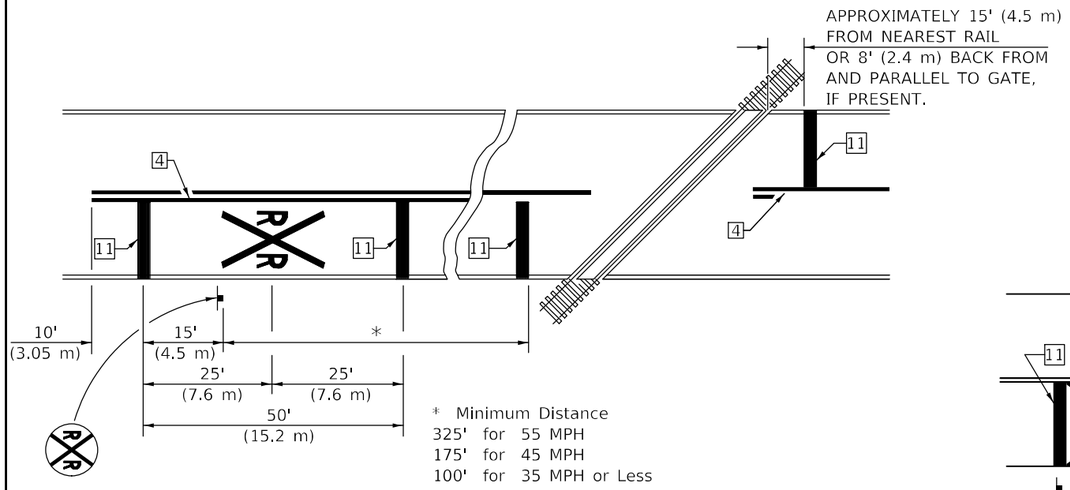

PAVEMENT MARKINGS AT
RAILROAD–HIGHWAY GRADE CROSSING

RAILROAD CROSSING WITH INTERCONNECT ONLY

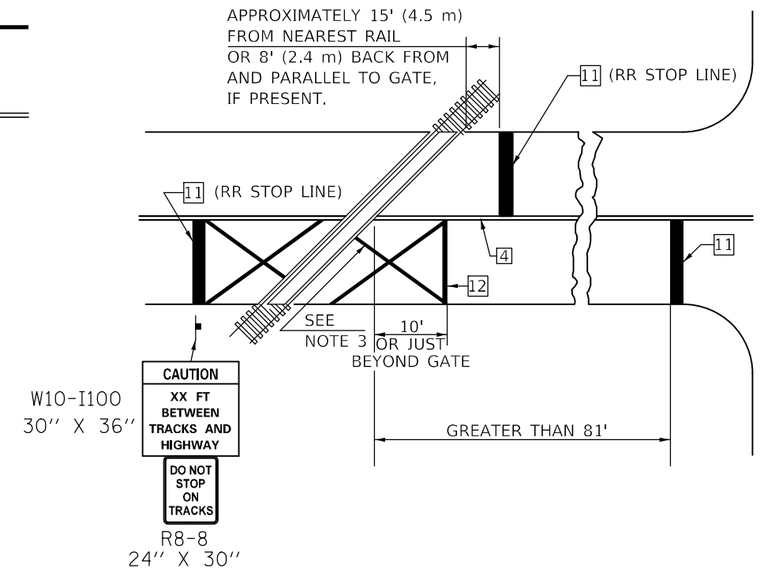

RAILROAD CROSSING WITH INTERCONNECT
AND PRE–SIGNALS

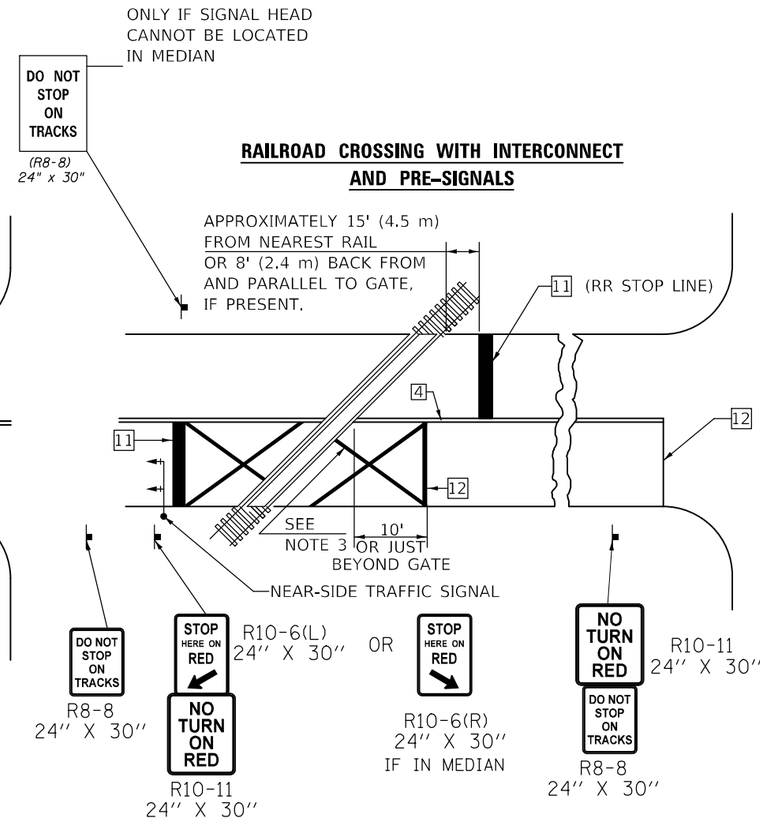

SUPPLEMENTAL PAVEMENT MARKING TREATMENT FOR
RAILROAD–HIGHWAY GRADE CROSSING

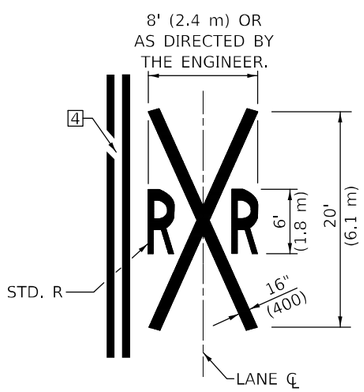

GENERAL NOTES

1. SUPPLEMENTAL PAVEMENT MARKINGS TO BE INSTALLED ONLY ON APPROACHES TO INTERSECTIONS CONTROLLED BY TRAFFIC SIGNALS WHICH ARE INTERCONNECTED WITH THE RAILROAD WARNING SIGNALS.

2. EXTEND PAVEMENT MARKINGS TO THE INTERSECTION ONLY WHERE NEAR-SIDE TRAFFIC SIGNALS ARE USED.

3. 6" WHITE PAVEMENT MARKINGS AT 45° TO PAVEMENT, 8' CENTER TO CENTER.

4. XX DISTANCE TO BE SHOWN ON SIGN MEASURED FROM A POINT 6 FEET FROM THE RAIL CLOSEST TO THE INTERSECTION OR FROM THE CLOSEST POINT ALONG THE EXIT GATE IF PRESENT OVER THE ROADWAY WHEN IN THE LOWERED POSITION TO THE STOP BAR OR CROSSWALK, WHICH EVER IS CLOSEST, ROUNDED DOWN TO NEAREST 5 FEET. WHERE THERE IS NO STOP LINE, MEASURE TO POINT WHERE DRIVER HAS A VIEW OF APPROACHING TRAFFIC.

5. THE CLEARANCE SIGN IS ALSO TO BE USED AS AN INTERIM MEASURE AT LOCATIONS WITH INTERCONNECTED INTERSECTION TRAFFIC SIGNALS WHERE IT IS PLANNED TO CHANGE THEM TO NEAR-SIDE SIGNALS AT A FUTURE TIME. IN THIS CASE, THE DISTANCE TO BE SHOWN ON THE SIGN IS MEASURED FROM THE EDGE OF THE STRIPED-OUT AREA INSTEAD OF 6 FEET FROM THE RAIL. THE SIGN IS TO BE REMOVED WHEN THE NEAR-SIDE SIGNALS ARE INSTALLED AND THE PAVEMENT MARKINGS EXTENDED TO THE INTERSECTION.

ALTERNATE SIGNS

NOTES

THE TRAVERSE SPREAD OF THE "X" MAY VARY ACCORDING TO LANE WIDTH.

ON MULTI-LANE ROADS, THE STOP LINES SHALL EXTEND ACROSS ALL APPROACH LANES AND SEPARATE RXR SYMBOLS SHALL BE PLACED ADJACENT TO EACH OTHER IN EACH LANE.

WHEN THE PAVEMENT MARKING SYMBOL IS USED, A PORTION OF THE SYMBOL SHOULD BE LOCATED DIRECTLY ADJACENT TO THE ADVANCE WARNING SIGN (W10-1) AS PLACED BY TABLE II-1, CONDITION B OF THE MUTCD.

Note: All dimensions are in INCHES (millimeters) unless otherwise shown.

DISTRICT 5 DETAIL NO. 7800AAAA

USER NAME = Tyler.Pierson	DESIGNED -	REVISED - 4/2014 JLA	STATE OF ILLINOIS DEPARTMENT OF TRANSPORTATION	PAVEMENT MARKING AND MARKERS (RURAL & URBAN APPLICATIONS)	F.A.P. RTE. 709 · SECTION (113)RS-7 · COUNTY CHAMPAIGN · TOTAL SHEETS 103 · SHEET NO. 90
	DRAWN -	REVISED - 3/2019 SWN			CONTRACT NO. 70944
PLOT SCALE = 40.0000 ' / in.	CHECKED -	REVISED - 8/2022 JLA			ILLINOIS · FED. AID PROJECT
PLOT DATE = 1/26/2023	DATE -	REVISED - 9/2022 JWS		SCALE: N.T.S. · SHEET 4 OF 4 SHEETS · STA. · TO STA.	

MODEL: $MODELNAMES
FILE NAME: pw:\\ildot-pw.bentley.com:PWIDOT\Documents\IDOT Offices\District 5\Projects\D570944\CADData\CADsheets\D570944-sht-Detail-05 Details.dgn

TO BE INSTALLED IN RIGID OR COMPOSITE PAVEMENT FOR PRESERVING LAND SURVEY MONUMENTS (SECTION OR SUBSECTION CORNERS)

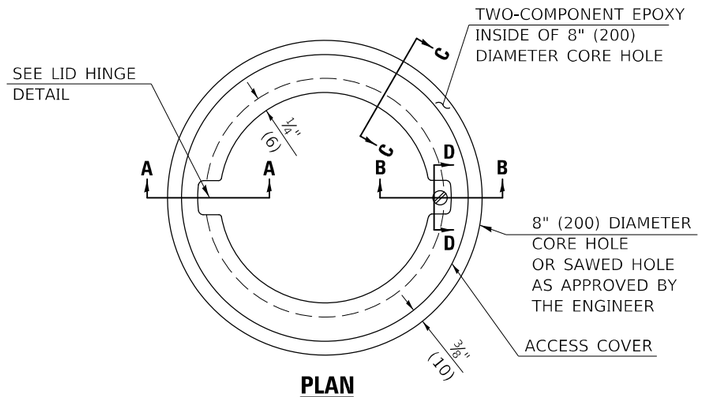

PLAN

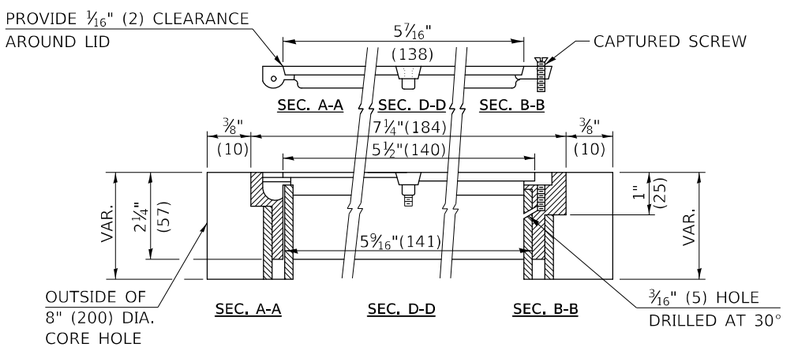

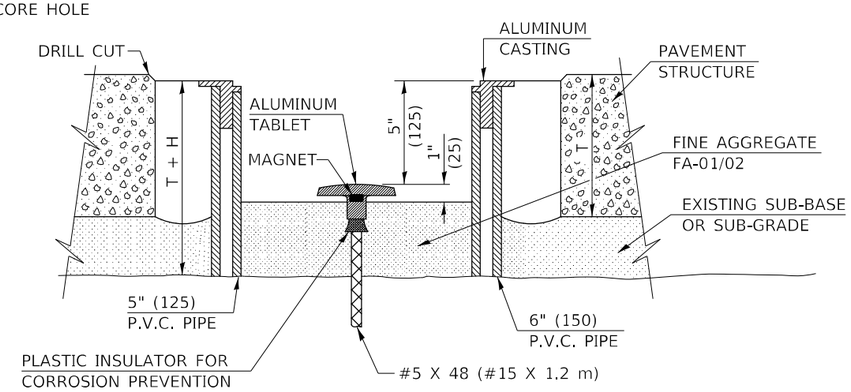

ELEVATION

LEGEND

- ALUMINUM CASTING
- 5" (125) OR 6" (150) P.V.C. PIPE
- TWO-COMPONENT EPOXY

T = THICKNESS OF PAVEMENT STRUCTURE

H = THE THICKNESS OF THE SUB-BASE GRANULAR + 1" (25)

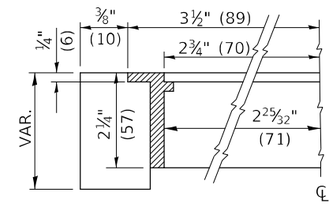

SECTION C–C

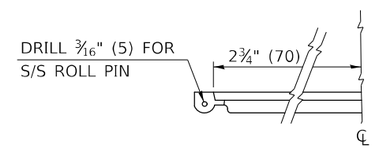

LID HINGE DETAIL

SPECIFICATIONS FOR ACCESS COVER FOR USE WITH SURVEY MARKER VAULT(S) AND SURVEY MARKER COVER ASSEMBLY(S): THE ACCESS COVER WILL BE CAST FROM A SPECIAL ALUMINUM ALLOY THAT IS COMPARABLE TO BRONZE IN HARDNESS. THE ACCESS COVER SHALL BE SPECIALLY ENGINEERED AND DESIGNED TO PROVIDE A SNUG FIT, INCORPORATING EQUIDISTANT LOCKING RIDGES, INSIDE A STANDARD 6" (150 mm) DIAMETER, OR OUTSIDE A STANDARD 5" (125 mm) DIAMETER, SCHEDULE 40 PVC PIPE. THE ACCESS COVER SHALL HAVE SPECIAL UNIFORM 1" (25 mm) THICK TOP SURFACE TO PERMIT INFORMATION TO BE EASILY MACHINE-STAMPED INTO IT. THE ACCESS COVER SHALL INCLUDE A STAINLESS CAPTURED SCREW AND AN OPPOSING RECESSED HINGE ASSEMBLY AS ITS LOCKING MECHANISM. THE ACCESS COVER SHALL INCORPORATE A SPECIAL ACCESS HOLE FOR CLEANING AND DRAINAGE, DRILLED AT 30° INSIDE THE RING OF THE ACCESS COVER, TO THE DRILLED AND TAPPED HOLE PROVIDED FOR THE STAINLESS CAPTURED SCREW. COMPOSITION: ALUMINUM 92-93%; MAGNESIUM 6.5-7.5%. STRENGTH: YIELD - 19,000-21,000 PSI (131-145 MPa); TENSILE - 38,000-44,000 PSI (262-303 MPa); ELONGATION - 10-15% IN 2" (50 mm). SPECIFICATIONS: ALLOY 535.0; QQ-A-601Es. NO EXCEPTIONS.

RE-BAR-SURVEY MARKER, TYPE I, (SPECIAL) TO BE FURNISHED BY THE CONTRACTOR AND SET BY AN ILLINOIS PROFESSIONAL LAND SURVEYOR (SEE SPECIAL DETAIL SHEET FOR ALUMINUM TABLET AND RE-BAR SPECIFICATIONS).

BILL OF MATERIAL
ALUMINUM CASTING OF THE DIMENSIONS AND SPECIFICATIONS SHOWN OR OTHER SUBJECT TO ENGINEER'S APPROVAL OF SHOP DRAWINGS, 5" OR 6" (125 mm OR 150 mm) DIAMETER P.V.C. PIPE, SCHEDULE 40, ALUMINUM TABLET, STAMPED IN ACCORDANCE WITH STANDARD 667101. ⅝" X 48" (#15 X 1.2 m) RE-BAR, EPOXY AND FA-01/02 AGGREGATE.

GENERAL NOTES

1. ALUMINUM CASTING SHALL BE EITHER PLACED OVER A 5" (125 mm) P.V.C. PIPE OR INSIDE OF A 6" (150 mm) P.V.C. PIPE.
2. BACKFILL WITH FINE AGGREGATE - FA-01/02.
3. WORK SHALL NOT START ON THIS ITEM UNTIL THE FINAL LIFT OF SURFACE HAS BEEN COMPLETED.
4. THIS WORK WILL BE PAID FOR AT THE CONTRACT UNIT PRICE EACH FOR SURVEY MARKER VAULT WHICH PRICE SHALL INCLUDE ALL LABOR AND MATERIAL AS SPECIFIED INCLUDING CORING, EPOXY AND FA-01/02 AGGREGATE AND NO ADDITIONAL COMPENSATION WILL BE ALLOWED.
5. THE CASTING SHALL BE ANCHORED IN THE 8" (200 mm) DIAMETER CORE HOLE WITH TWO-COMPONENT EPOXY CONFORMING TO APPLICABLE PORTIONS OF ARTICLE 1025.01 OF THE STANDARD SPECIFICATIONS.
6. ALL SURVEY MARKER (VAULTS) SHALL BE PLACED 1/4" (6 mm) BELOW THE FINAL SURFACE.
7. THE 8" (200 mm) DIAMETER CORE HOLE SHALL BE SUBJECT TO THE APPROVAL OF THE ENGINEER.

Note: All dimensions are in INCHES (millimeters) unless otherwise shown.

DISTRICT 5 DETAIL NO. X0301232

USER NAME = Tyler.Pierson	DESIGNED -	REVISED - 11/06	
	DRAWN -	REVISED -	
PLOT SCALE = 40.0000 ' / in.	CHECKED -	REVISED -	
PLOT DATE = 1/26/2023	DATE -	REVISED -	

STATE OF ILLINOIS
DEPARTMENT OF TRANSPORTATION

SURVEY MARKER VAULT

SCALE: N.T.S. | SHEET 1 OF 1 SHEETS | STA. TO STA.

F.A.P. RTE.	SECTION	COUNTY	TOTAL SHEETS	SHEET NO.
709	(113)RS-7	CHAMPAIGN	103	91
		CONTRACT NO. 70944		
		ILLINOIS	FED. AID PROJECT	

MODEL: $MODELNAME$
FILE NAME: pw:\\ildot-pw.bentley.com:PWIDOT\Documents\IDOT Offices\District 5\Projects\D570944\CADData\CADsheets\D570944-sht-Detail-D5 Details.dgn

XZ193300 – SURVEY MARKER, TYPE 1 (SPECIAL)

TO BE INSTALLED IN FLEXIBLE PAVEMENT OR SHOULDER, BITUMINOUS TREATED SURFACE AND TURF AREAS WITHIN THE RIGHT-OF-WAY FOR PRESERVING PERMANENT SURVEY MARKERS (PI'S, PT'S, PC'S, POC'S, & POT'S)

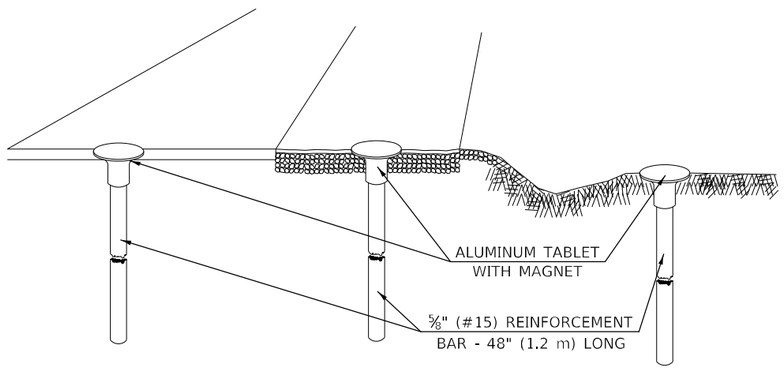

IN FLEXIBLE PAVEMENT OR SHOULDER | IN BITUMINOUS TREATED SURFACE | IN TURF AREAS WITHIN R.O.W.

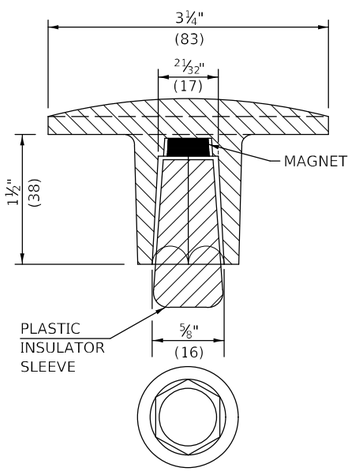

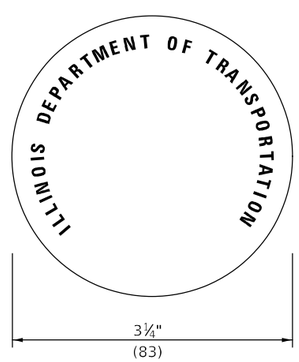

THE DIMENSIONS SHOWN SHALL BE EXACT, OTHERS MAY VARY, BUT SHALL BE SHOWN ON SHOP DRAWINGS.

GENERAL NOTES

1. THE CONTRACT UNIT PRICE, EACH, FOR SURVEY MARKER, TYPE 1 (SPECIAL) SHALL BE PAYMENT IN FULL FOR FURNISHING THE REINFORCEMENT BAR AND ALUMINUM TABLET AND FOR ALL LABOR AND MATERIAL REQUIRED TO SET THE MARKER IN PLACE.
2. ALL SURVEY MARKERS, TYPE 1 (SPECIAL) SHALL BE PLACED ±1/4" (6 mm) BELOW THE FINAL SURFACE.
3. WHEN THE TABLET AND REBAR ARE PLACED AS PART OF A SURVEY MARKER VAULT, THEY SHALL BE CONSIDERED AS INCLUDED IN THAT PAY ITEM AND THERE WILL BE NO PAYMENT FOR THE SURVEY MARKER, TYPE 1 (SPECIAL).

SPECIFICATIONS FOR ALUMINUM TABLET

SURVEY CAP FOR REBAR. 3¼" (83 mm) CONVEX SURVEY CAP FOR ⅝" (15 mm) REBAR WITH ILLINOIS DEPARTMENT OF TRANSPORTATION LOGO. THIS LOGO SHALL PROVIDE LETTERS RECESSED INTO THE SURFACE A MINIMUM OF 1/32" (0.8 mm) FOR EASY AND LONG-TERM LEGIBILITY. THE ALUMINUM CAP FOR REBAR SHALL BE PRODUCED BY THE PROCESS OF ORBITAL FORGING TO PRODUCE A HIGH-STRENGTH AND DURABLE MARKER CAP WHICH WILL NOT CHIP OR BREAK AND PROVIDE A SMOOTH FINISH FOR STAMPING OF DATA IN THE FIELD. THE ALUMINUM CAP FOR REBAR SHALL BE TAPERED FOR A PERFECT COMPRESSION FIT. A SPECIAL PLASTIC INSULATOR SHALL BE INSTALLED TO PREVENT DISSIMILAR METAL CONTACT AND CORROSION. THE PLASTIC INSULATOR SHALL FORM READILY TO THE OUTER SHAPE OF THE REBAR AND TO THE INNER SHAPE OF THE ALUMINUM CAP SOCKET. THE PLASTIC INSULATOR SHALL BE LOW DENSITY POLYETHYLENE, A MINIMUM 1½" (38 mm) LONG AND CONFORM TO FEDERAL SPECIFICATION L-P 390.

COMPOSITION: ALUMINUM 98.3-98.7%; OTHER 1.3-1.7%; STRENGTH: YIELD 28 KSI (193 MPa), ULTIMATE 32 KSI (221 MPa). ELONGATION 15% [IN 2" (50 mm)]. SPECIFICATIONS: ALUMINUM ALLOY 6101-0; ASTM B317-83 (EXCEPT TEMPER) AS FORGED. NO EXCEPTIONS.

SPECIFICATIONS FOR REBAR

REBAR FOR ALUMINUM TABLET. REINFORCEMENT BAR SHALL BE ⅝" (#15) X 48" (1.2 m) (DEFORMED).

INSPECTION OF REINFORCEMENT BAR ⅝" (#15) SHALL BE DONE BY DISTRICT PERSONNEL OF THE ILLINOIS DEPARTMENT OF TRANSPORTATION, DIVISION OF HIGHWAYS.

XZ193400 – SURVEY MARKER, TYPE 2 (SPECIAL)

TO BE INSTALLED IN RIGID OR COMPOSITE PAVEMENT FOR PRESERVING PERMANENT SURVEY MARKERS (PI'S, PT'S, PC'S, POC'S, & POT'S)

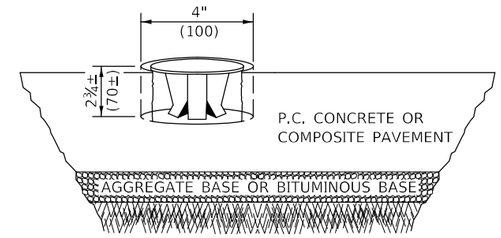

SPECIFICATIONS FOR ALUMINUM TABLET (FORKED)

ALUMINUM TABLET (FORKED) FOR USE WITH "SURVEY MARKER, TYPE 2, (SPECIAL)" SHALL BE AS SHOWN ON THE DETAIL FOR THE 3¼" (83 mm) CONVEX SURVEY TABLET WITH ILLINOIS DEPARTMENT OF TRANSPORTATION LOGO. THIS LOGO SHALL PROVIDE FOR LETTERS RECESSED INTO THE SURFACE A MINIMUM OF 1/32" (0.8 mm) FOR EASY AND LONG-TERM LEGIBILITY. THE ALUMINUM TABLET SHALL BE PRODUCED BY THE PROCESS OF ORBITAL FORGING TO PRODUCE A HIGH-STRENGTH AND DURABLE MARKER CAP WHICH WILL NOT CHIP OR BREAK AND PROVIDE A SMOOTH FINISH FOR STAMPING OF DATA IN THE FIELD. THE ALUMINUM TABLET SHALL BE DESIGNED NOT TO TURN OR ROTATE. THREE PRONGS ON A 2½" (63 mm) STEM SHALL BE SUCH THAT THE ALUMINUM TABLET CANNOT BE EASILY REMOVED.

COMPOSITION: ALUMINUM 92-93%; MAGNESIUM 6.5-7.5%. STRENGTH: YIELD 19,000-21,000 PSI (131-145 MPa); TENSILE 38,000-44,000 PSI (262-303 MPa); ELONGATION 10-15% [IN 2" (50 mm)]. SPECIFICATIONS: ALLOY 535.0; QQ-A-601ES. NO EXCEPTIONS.

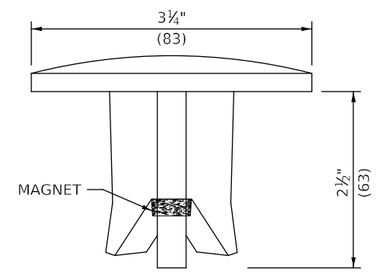

SIDE VIEW

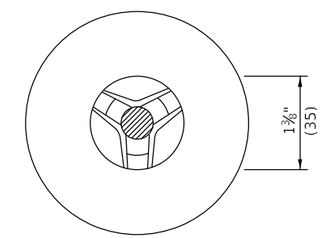

BOTTOM VIEW

THE DIMENSIONS SHOWN SHALL BE EXACT, OTHERS MAY VARY, BUT SHALL BE SHOWN ON SHOP DRAWINGS.

GENERAL NOTES

1. WORK ON THIS ITEM SHALL NOT START UNTIL THE FINAL SURFACE IS COMPLETED.
2. THE ALUMINUM TABLET (FORKED) SHALL REST UPON THE BOTTOM OF THE 4" (100 mm) CORE HOLE. IF THE HOLE IS TOO DEEP, EPOXY GROUT MUST BE USED TO DECREASE THE DEPTH AND ALLOWED TO HARDEN BEFORE PROCEEDING.
3. THE ALUMINUM TABLET SHALL BE ANCHORED IN THE 4" (100 mm) DIAMETER HOLE IN THE NEW PAVEMENT WITH TWO-COMPONENT EPOXY CONFORMING TO APPLICABLE PORTIONS OF ARTICLE 1025.01 OF THE STANDARD SPECIFICATIONS.
4. THE 4" (100 mm) CORE HOLE SHALL BE SUBJECT TO THE APPROVAL OF THE ENGINEER.
5. THE CONTRACT PRICE, EACH, FOR SURVEY MARKER, TYPE 2 (SPECIAL) SHALL BE PAYMENT IN FULL FOR FURNISHING THE ALUMINUM TABLET AND FOR ALL LABOR AND MATERIAL REQUIRED TO SET THE MARKER IN PLACE, AS SPECIFIED, INCLUDING CORING THE NEW PAVEMENT.
6. ALL SURVEY MARKERS, TYPE 2 (SPECIAL) SHALL BE PLACED ± 1/4" (6 mm) BELOW THE FINAL SURFACE.

Note: All dimensions are in INCHES (millimeters) unless otherwise shown.

DISTRICT 5 DETAIL NO. XZ193AAA

USER NAME = Tyler.Pierson	DESIGNED -	REVISED - 11/06	
	DRAWN -	REVISED - 11/10	
PLOT SCALE = 40.0000 ' / in.	CHECKED -	REVISED -	
PLOT DATE = 1/26/2023	DATE -	REVISED -	

STATE OF ILLINOIS
DEPARTMENT OF TRANSPORTATION

SURVEY MARKERS TYPE 1 & 2 (SPECIAL)

SCALE: N.T.S. | SHEET 1 OF 1 SHEETS | STA. TO STA.

F.A.P. RTE.	SECTION	COUNTY	TOTAL SHEETS	SHEET NO.
709	(113)RS-7	CHAMPAIGN	103	92
		CONTRACT NO. 70944		
		ILLINOIS FED. AID PROJECT		

MODEL: $MODELNAME$
FILE NAME: pw:\\ildot-pw.bentley.com:PWIDOT\Documents\IDOT Offices\District 5\Projects\D570944\CADData\CADsheets\D570944-sht-Detail-05 Details.dgn

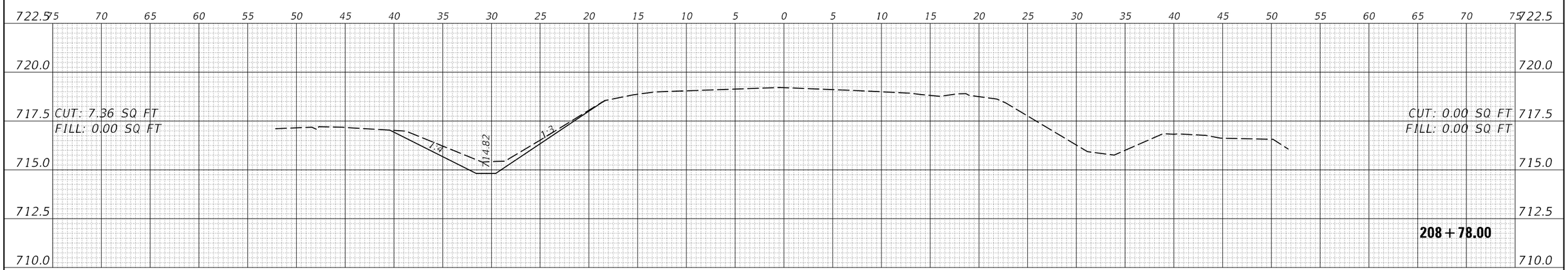

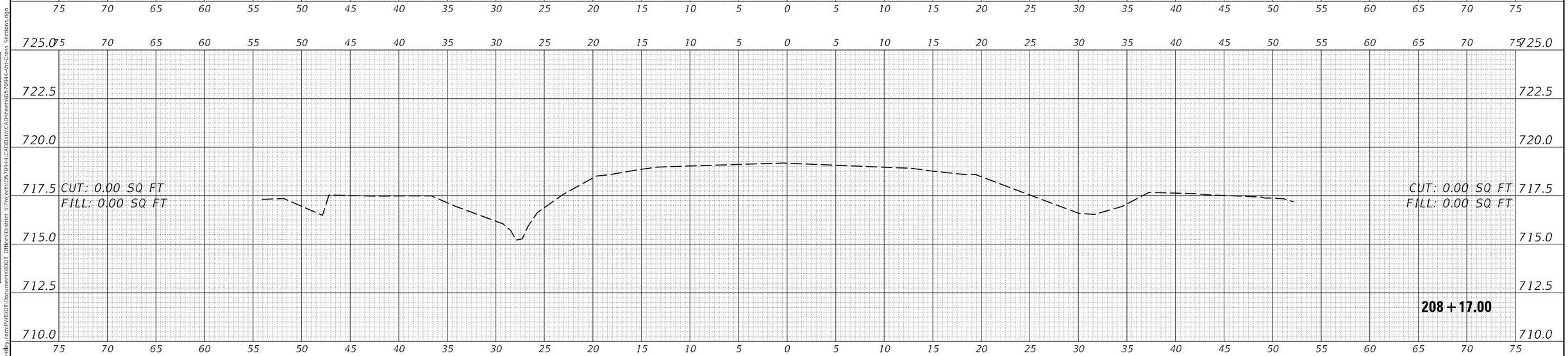

USER NAME = Tyler.Pierson	DESIGNED -	REVISED -	
	DRAWN -	REVISED -	
PLOT SCALE = 10.0000 ' / in.	CHECKED -	REVISED -	
PLOT DATE = 1/26/2023	DATE -	REVISED -	

STATE OF ILLINOIS
DEPARTMENT OF TRANSPORTATION

FAP 709 (US 136) CROSS-SECTIONS

SCALE: 1" = 5' | SHEET 1 OF 11 SHEETS | STA. 208+20.00 TO STA. 208+78.00

F.A.P. RTE.	SECTION	COUNTY	TOTAL SHEETS	SHEET NO.
709	(113)RS-7	CHAMPAIGN	103	93

CONTRACT NO. 70944

ILLINOIS | FED. AID PROJECT

FINAL SURVEY: SURVEYED / PLOTTED / TEMPLATE / AREAS / AREAS CHECKED — NOTE BOOK NO. — BY — DATE

ORIGINAL SURVEY: SURVEYED / PLOTTED / TEMPLATE / AREAS / AREAS CHECKED — NOTE BOOK NO. — BY — DATE

MODEL: SMODELNAME5
FILE NAME: pw:\\ildot-pw.bentley.com:PWIDOT\Documents\IDOT Offices\District 5\Projects\D570944\CAD\data\CAD\sheets\D570944-sht-Cross Sections.dgn

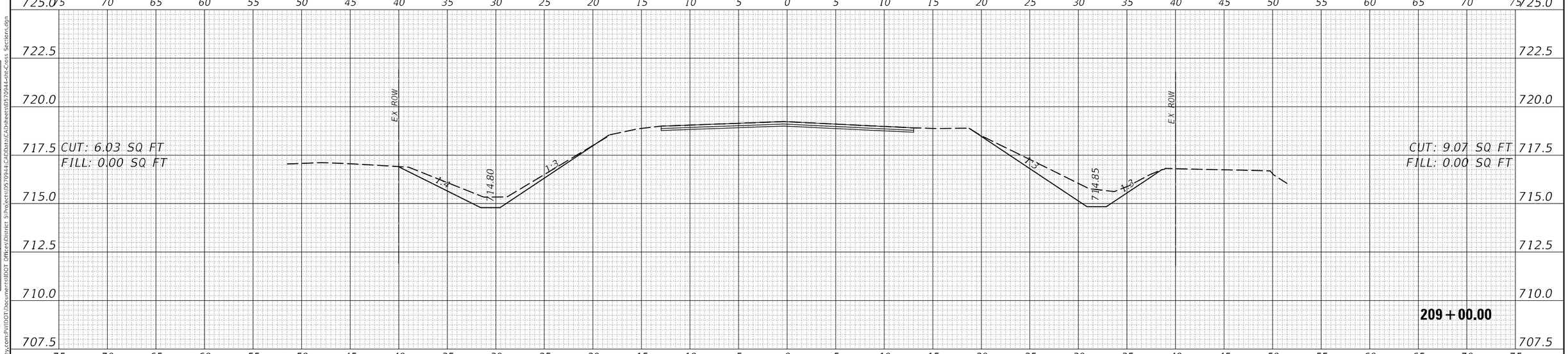

USER NAME = Tyler.Pierson	DESIGNED -	REVISED -	
	DRAWN -	REVISED -	
PLOT SCALE = 10.0000 ' / in.	CHECKED -	REVISED -	
PLOT DATE = 1/26/2023	DATE -	REVISED -	

STATE OF ILLINOIS
DEPARTMENT OF TRANSPORTATION

FAP 709 (US 136) CROSS-SECTIONS

SCALE: 1" = 5' | SHEET 2 OF 11 SHEETS | STA. 209+00.00 TO STA. 210+00.00

F.A.P. RTE.	SECTION	COUNTY	TOTAL SHEETS	SHEET NO.
709	(113)RS-7	CHAMPAIGN	103	94
		CONTRACT NO. 70944		
		ILLINOIS	FED. AID PROJECT	

FINAL SURVEY — NOTE BOOK NO. — SURVEYED — PLOTTED — TEMPLATE — AREAS — AREAS CHECKED — BY — DATE

ORIGINAL SURVEY — NOTE BOOK NO. — SURVEYED — PLOTTED — TEMPLATE — AREAS — AREAS CHECKED — BY — DATE

MODEL: $MODELNAME
FILE NAME: pw:\\ildot-pw.bentley.com:PWIDOT\Documents\IDOT Offices\District 5\Projects\D570944\CADData\CADSheets\D570944-sht-Cross Sections.dgn

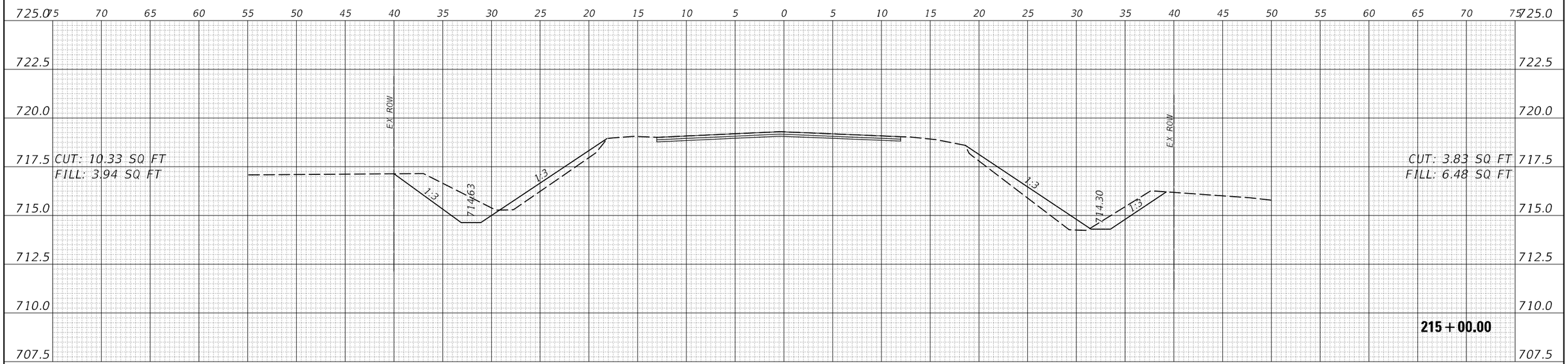

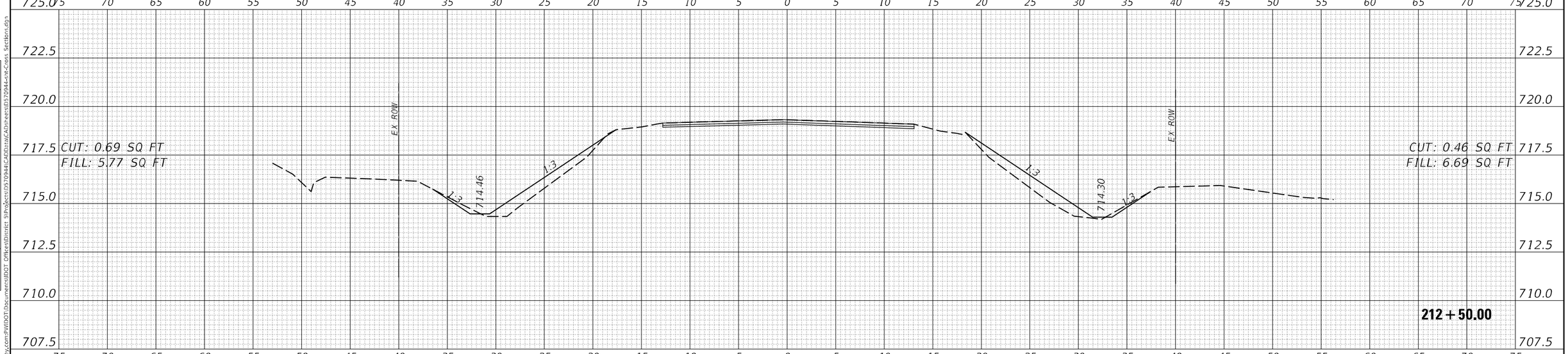

USER NAME = Tyler.Pierson	DESIGNED -	REVISED -	
	DRAWN -	REVISED -	
PLOT SCALE = 10.0000 ' / in.	CHECKED -	REVISED -	
PLOT DATE = 1/26/2023	DATE -	REVISED -	

STATE OF ILLINOIS
DEPARTMENT OF TRANSPORTATION

FAP 709 (US 136) CROSS-SECTIONS

SCALE: 1" = 5' | SHEET 3 OF 11 SHEETS | STA. 212+50.00 TO STA. 215+00.00

F.A.P. RTE.	SECTION	COUNTY	TOTAL SHEETS	SHEET NO.
709	(113)RS-7	CHAMPAIGN	103	95
		CONTRACT NO. 70944		
		ILLINOIS FED. AID PROJECT		

FINAL SURVEY	SURVEYED	PLOTTED	TEMPLATE	AREAS	AREAS CHECKED
NOTE BOOK NO.					

ORIGINAL SURVEY	SURVEYED	PLOTTED	TEMPLATE	AREAS	AREAS CHECKED
NOTE BOOK NO.					

MODEL: SMOOREJNAMES
FILE NAME: pw://illidot-sv.bentley.com:PW/IDOT/Documents/IDOT Offices/District 5/Projects/D570944/CADData/CADSheets/D570944-sht-Cross Sections.dgn

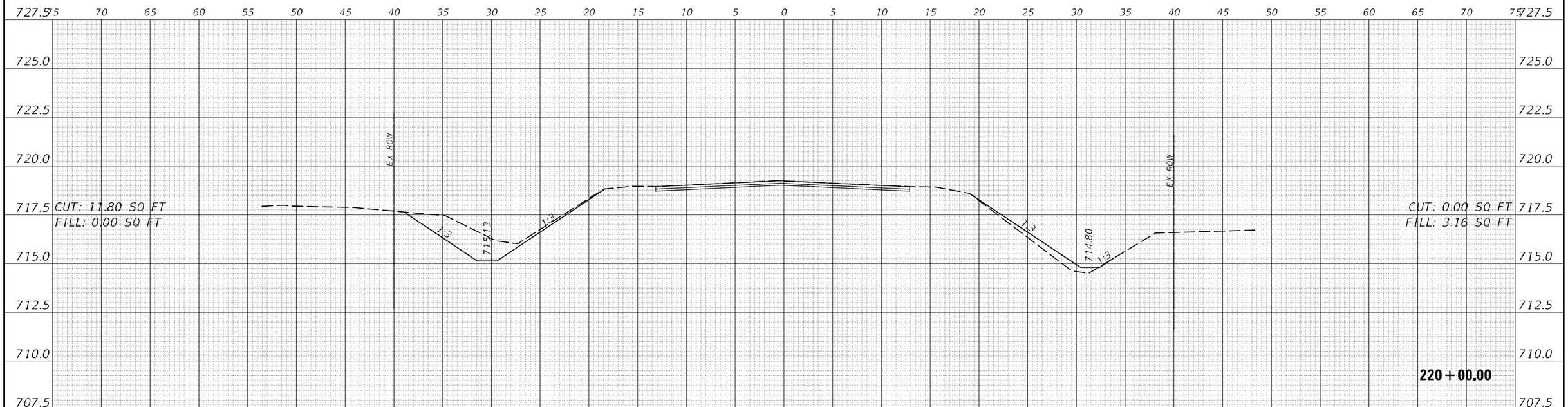

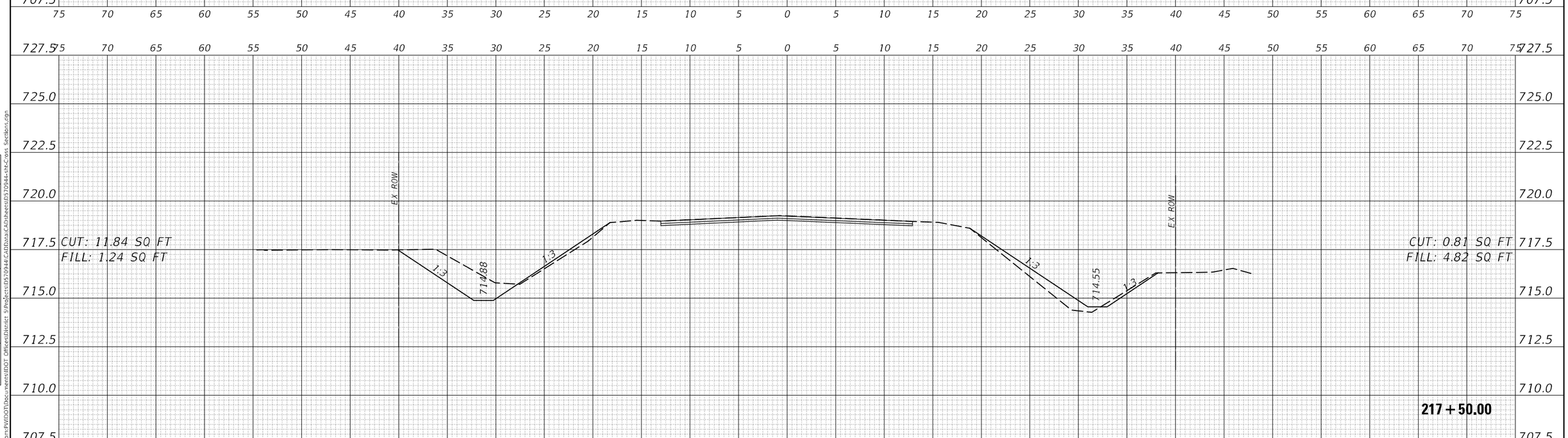

USER NAME = Tyler.Pierson	DESIGNED -	REVISED -	
	DRAWN -	REVISED -	
PLOT SCALE = 10.0000 ' / in.	CHECKED -	REVISED -	
PLOT DATE = 1/26/2023	DATE -	REVISED -	

STATE OF ILLINOIS
DEPARTMENT OF TRANSPORTATION

FAP 709 (US 136) CROSS-SECTIONS

SCALE: 1" = 5' | SHEET 4 OF 11 SHEETS | STA. 217+50.00 TO STA. 220+00.00

F.A.P. RTE.	SECTION	COUNTY	TOTAL SHEETS	SHEET NO.
709	(113)RS-7	CHAMPAIGN	103	96
		CONTRACT NO. 70944		
		ILLINOIS	FED. AID PROJECT	

FINAL SURVEY: SURVEYED, PLOTTED, TEMPLATE, AREAS, AREAS CHECKED, NOTE BOOK NO., BY, DATE

ORIGINAL SURVEY: SURVEYED, PLOTTED, TEMPLATE, AREAS, AREAS CHECKED, NOTE BOOK NO., BY, DATE

MODEL: <MODEL NAME>
FILE NAME: pw:\\ildot-pw.bentley.com:PWIDOT\Documents\IDOT Offices\District 5\Projects\D570944\CADData\CADsheets\D570944-sht-Cross Sections.dgn

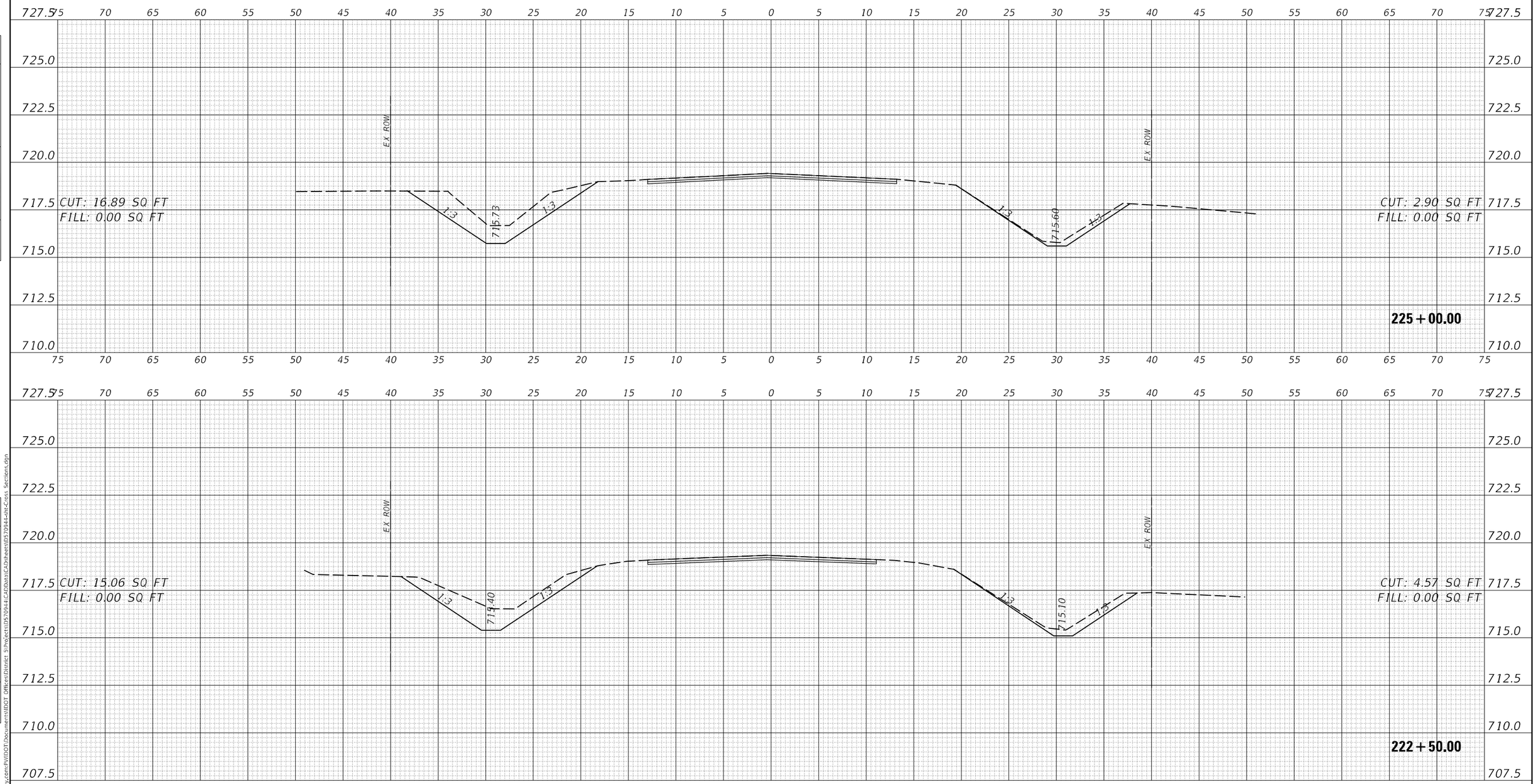

USER NAME = Tyler.Pierson	DESIGNED -	REVISED -	
	DRAWN -	REVISED -	
PLOT SCALE = 10.0000 ' / in.	CHECKED -	REVISED -	
PLOT DATE = 1/26/2023	DATE -	REVISED -	

STATE OF ILLINOIS
DEPARTMENT OF TRANSPORTATION

FAP 709 (US 136) CROSS-SECTIONS

SCALE: 1" = 5' | SHEET 5 OF 11 SHEETS | STA. 222+50.00 TO STA. 225+00.00

F.A.P. RTE.	SECTION	COUNTY	TOTAL SHEETS	SHEET NO.
709	(113)RS-7	CHAMPAIGN	103	97
		CONTRACT NO. 70944		
		ILLINOIS	FED. AID PROJECT	

FINAL SURVEY	BY	DATE
SURVEYED		
PLOTTED		
TEMPLATE		
AREAS		
AREAS CHECKED		
NOTE BOOK		
NO.		

ORIGINAL SURVEY	BY	DATE
SURVEYED		
PLOTTED		
TEMPLATE		
AREAS		
AREAS CHECKED		
NOTE BOOK		
NO.		

MODEL: $MODEL$NAME$
FILE NAME: pw:\\ildot-pw.bentley.com:PWIDOT\Documents\IDOT Offices\District 5\Projects\D570944\CADData\CADsheets\D570944-sht-Cross Sections.dgn

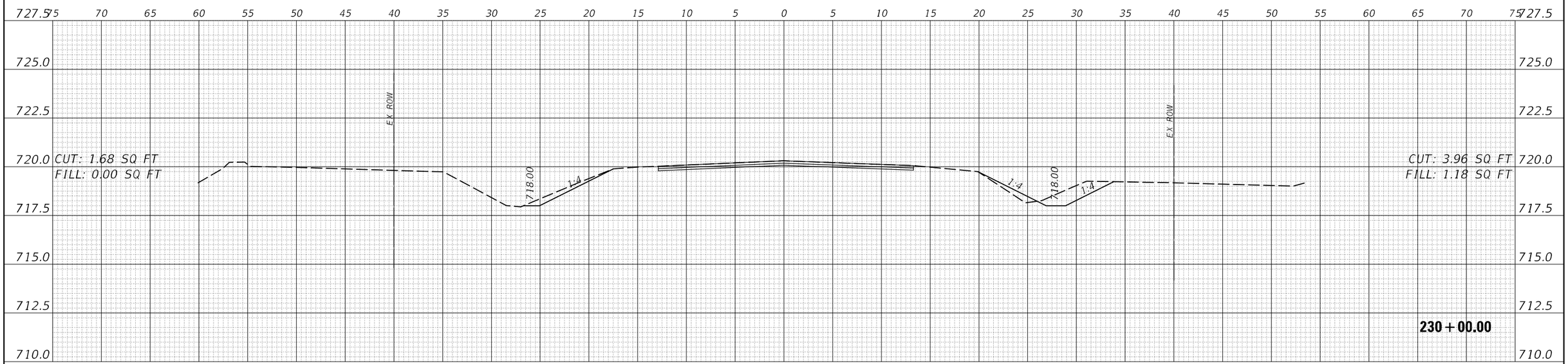

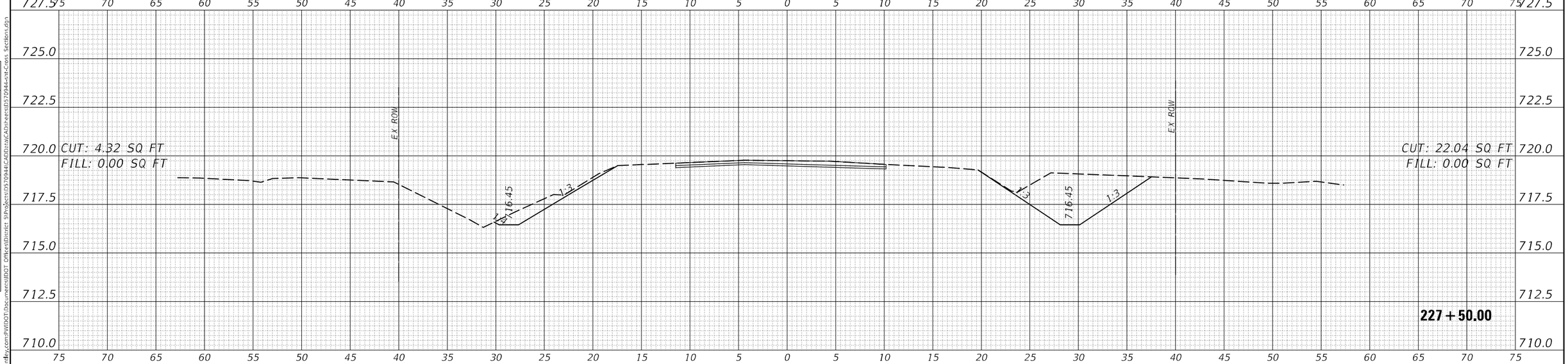

USER NAME = Tyler.Pierson	DESIGNED -	REVISED -	
	DRAWN -	REVISED -	
PLOT SCALE = 10.0000 ' / in.	CHECKED -	REVISED -	
PLOT DATE = 1/26/2023	DATE -	REVISED -	

STATE OF ILLINOIS
DEPARTMENT OF TRANSPORTATION

FAP 709 (US 136) CROSS-SECTIONS

SCALE: 1" = 5' | SHEET 6 OF 11 SHEETS | STA. 227+50.00 TO STA. 230+00.00

F.A.P. RTE.	SECTION	COUNTY	TOTAL SHEETS	SHEET NO.
709	(113)RS-7	CHAMPAIGN	103	98
		CONTRACT NO. 70944		
		ILLINOIS	FED. AID PROJECT	

MODEL: SMODELNAMES
FILE NAME: pw:\\illdot-sw.bentley.com:PWIDOT\Documents\IDOT Offices\District 5\Projects\D570944\CADData\CADSheets\D570944-sht-Cross Sections.dgn

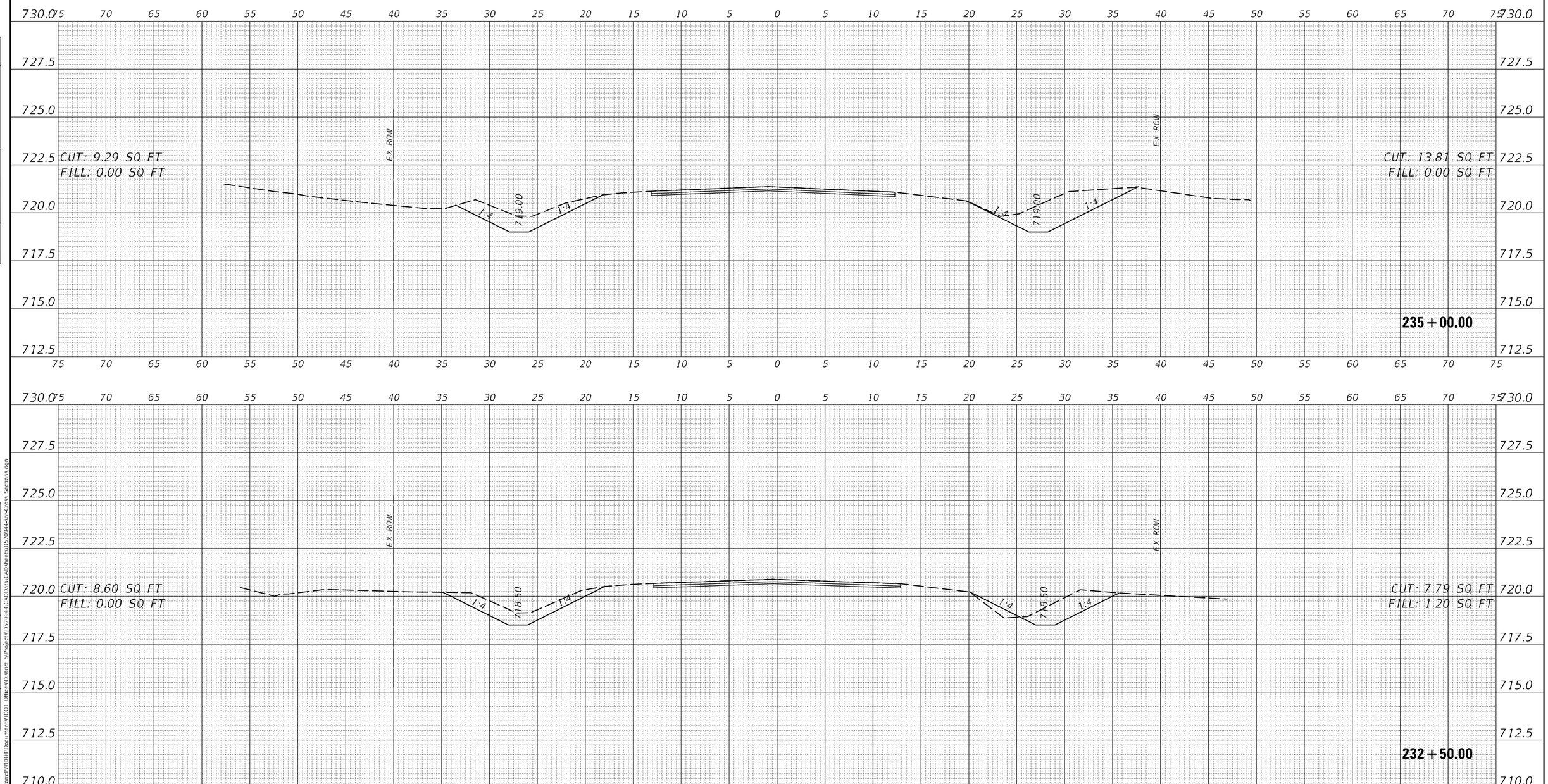

USER NAME = Tyler.Pierson	DESIGNED -	REVISED -	
	DRAWN -	REVISED -	
PLOT SCALE = 10.0000 ' / in.	CHECKED -	REVISED -	
PLOT DATE = 1/26/2023	DATE -	REVISED -	

STATE OF ILLINOIS
DEPARTMENT OF TRANSPORTATION

FAP 709 (US 136) CROSS-SECTIONS

SCALE: 1" = 5' | SHEET 7 OF 11 SHEETS | STA. 232+50.00 TO STA. 235+00.00

F.A.P. RTE.	SECTION	COUNTY	TOTAL SHEETS	SHEET NO.
709	(113)RS-7	CHAMPAIGN	103	99
		CONTRACT NO. 70944		
		ILLINOIS	FED. AID PROJECT	

FINAL SURVEY | NOTE BOOK NO. | SURVEYED | PLOTTED | TEMPLATE | AREAS | AREAS CHECKED | BY | DATE

ORIGINAL SURVEY | NOTE BOOK NO. | SURVEYED | PLOTTED | TEMPLATE | AREAS | AREAS CHECKED | BY | DATE

MODEL: $MODEL$NAME$
FILE NAME: pw:\\itd-pw.bentley.com:PWIDOT\Documents\IDOT Offices\District 5\Projects\D570944\CADData\CADsheets\D570944-sht-Cross Sections.dgn

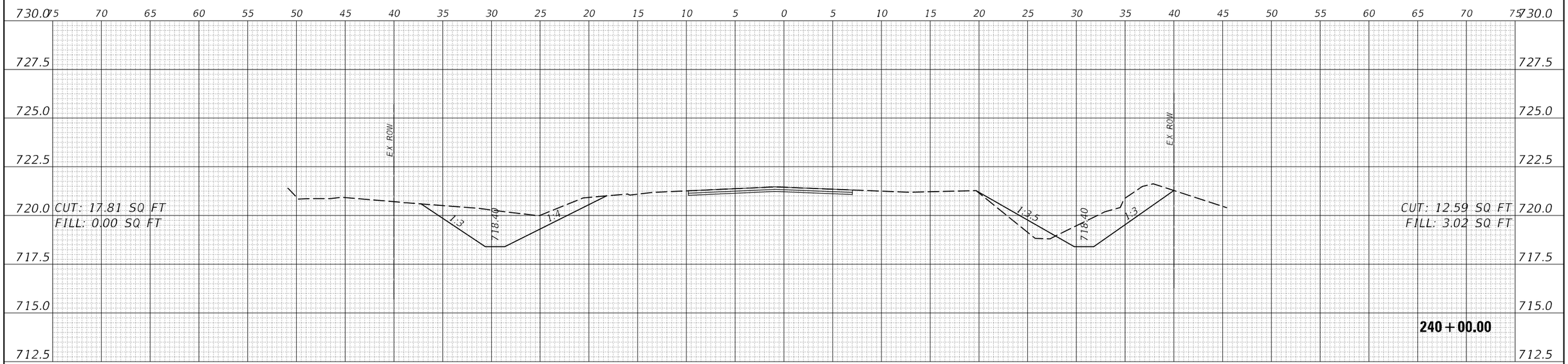

USER NAME = Tyler.Pierson	DESIGNED -	REVISED -	
	DRAWN -	REVISED -	
PLOT SCALE = 10.0000 ' / in.	CHECKED -	REVISED -	
PLOT DATE = 1/26/2023	DATE -	REVISED -	

STATE OF ILLINOIS
DEPARTMENT OF TRANSPORTATION

FAP 709 (US 136) CROSS-SECTIONS

SCALE: 1" = 5' | SHEET 8 OF 11 SHEETS | STA. 237+50.00 TO STA. 240+00.00

F.A.P. RTE.	SECTION	COUNTY	TOTAL SHEETS	SHEET NO.
709	(113)RS-7	CHAMPAIGN	103	100

CONTRACT NO. 70944

ILLINOIS | FED. AID PROJECT

FINAL SURVEY: NOTE BOOK NO. | SURVEYED | PLOTTED | TEMPLATE | AREAS | AREAS CHECKED | BY | DATE

ORIGINAL SURVEY: NOTE BOOK NO. | SURVEYED | PLOTTED | TEMPLATE | AREAS | AREAS CHECKED | BY | DATE

MODEL: $MODELNAME$
FILE NAME: pw:\\ildot-pw.bentley.com:PWIDOT\Documents\IDOT Offices\District 5\Projects\D570944\CADData\CADsheets\D570944-sht-Cross Sections.dgn

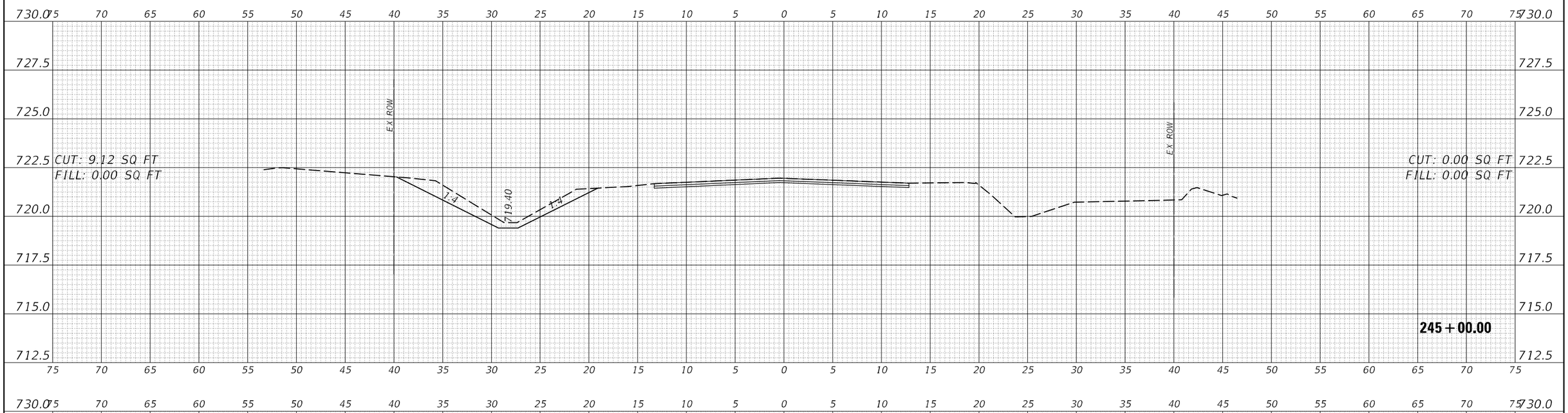

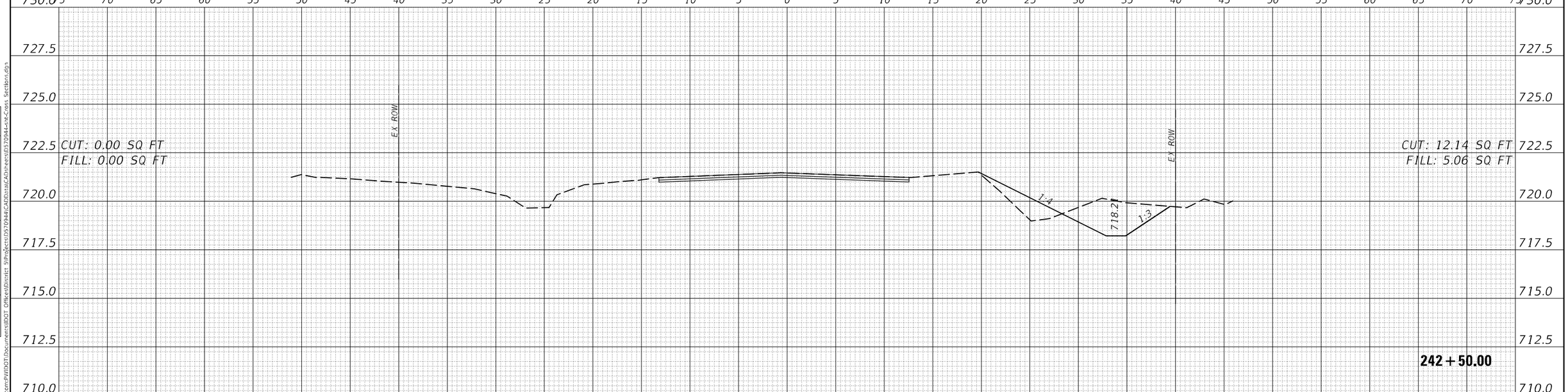

USER NAME = Tyler.Pierson	DESIGNED -	REVISED -	
	DRAWN -	REVISED -	
PLOT SCALE = 10.0000 ' / in.	CHECKED -	REVISED -	
PLOT DATE = 1/26/2023	DATE -	REVISED -	

STATE OF ILLINOIS
DEPARTMENT OF TRANSPORTATION

FAP 709 (US 136) CROSS-SECTIONS

SCALE: 1" = 5' | SHEET 9 OF 11 SHEETS | STA. 242+50.00 TO STA. 245+00.00

F.A.P. RTE.	SECTION	COUNTY	TOTAL SHEETS	SHEET NO.
709	(113)RS-7	CHAMPAIGN	103	101
		CONTRACT NO. 70944		
		ILLINOIS	FED. AID PROJECT	

FINAL SURVEY: NOTE BOOK NO.: SURVEYED / PLOTTED / TEMPLATE / AREAS / AREAS CHECKED — BY — DATE

ORIGINAL SURVEY: NOTE BOOK NO.: SURVEYED / PLOTTED / TEMPLATE / AREAS / AREAS CHECKED — BY — DATE

MODEL: sMODFI NAME:
FILE NAME: pw:\\ildot-pw.bentley.com:PWIDOT\Documents\IDOT Offices\District 5\Projects\D570944\CAD\Data\CADsheets\D570944-sht-Cross Sections.dgn

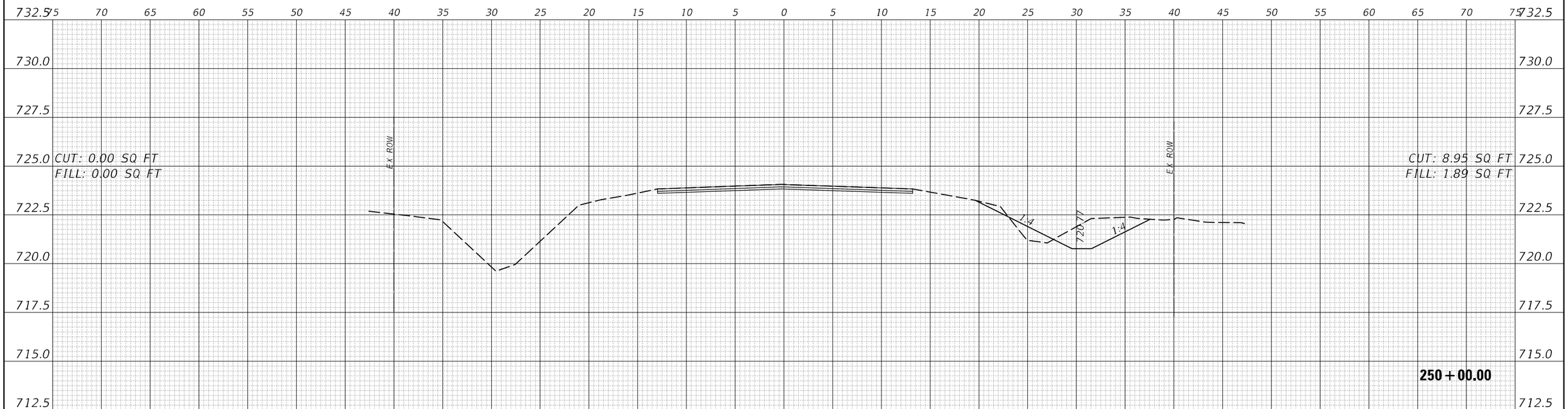

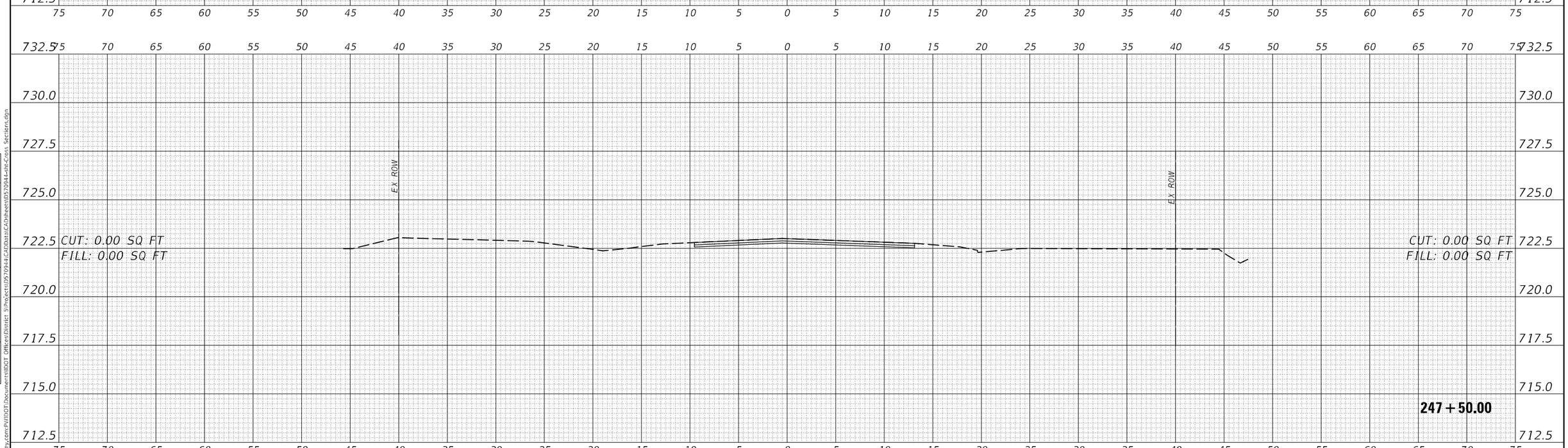

USER NAME = Tyler.Pierson	DESIGNED -	REVISED -	
	DRAWN -	REVISED -	
PLOT SCALE = 10.0000 ' / in.	CHECKED -	REVISED -	
PLOT DATE = 1/26/2023	DATE -	REVISED -	

STATE OF ILLINOIS
DEPARTMENT OF TRANSPORTATION

FAP 709 (US 136) CROSS-SECTIONS

SCALE: 1" = 5' | SHEET 10 OF 11 SHEETS | STA. 247+50.00 TO STA. 250+00.00

F.A.P. RTE.	SECTION	COUNTY	TOTAL SHEETS	SHEET NO.
709	(113)RS-7	CHAMPAIGN	103	102
		CONTRACT NO. 70944		
		ILLINOIS	FED. AID PROJECT	

FINAL SURVEY: SURVEYED, PLOTTED, TEMPLATE, AREAS, AREAS CHECKED, NOTE BOOK NO., BY, DATE

ORIGINAL SURVEY: SURVEYED, PLOTTED, TEMPLATE, AREAS, AREAS CHECKED, NOTE BOOK NO., BY, DATE

MODEL: $MODEL$NAME$
FILE NAME: pw:\\ildot-pw.bentley.com:PWIDOT\Documents\IDOT Offices\District 5\Projects\D570944\CADData\CADsheets\D570944-sht-Cross Sections.dgn

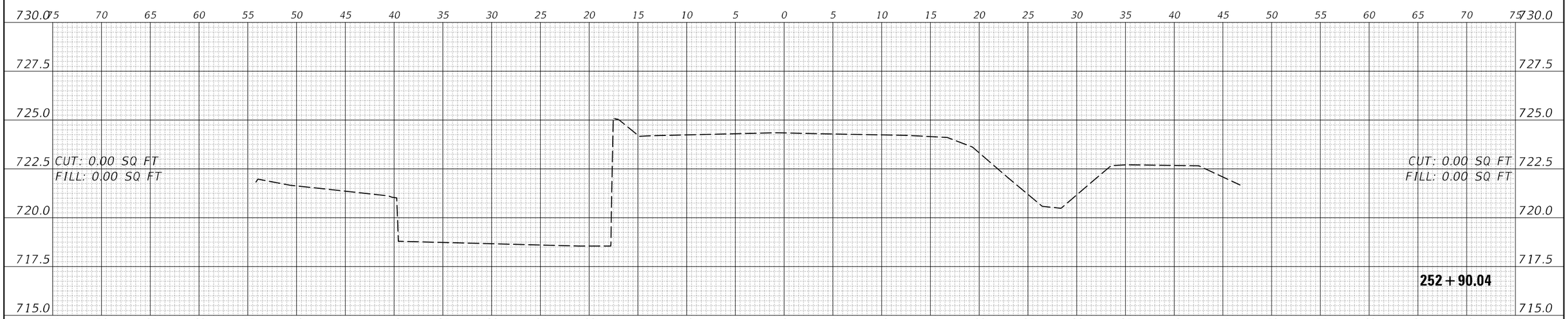

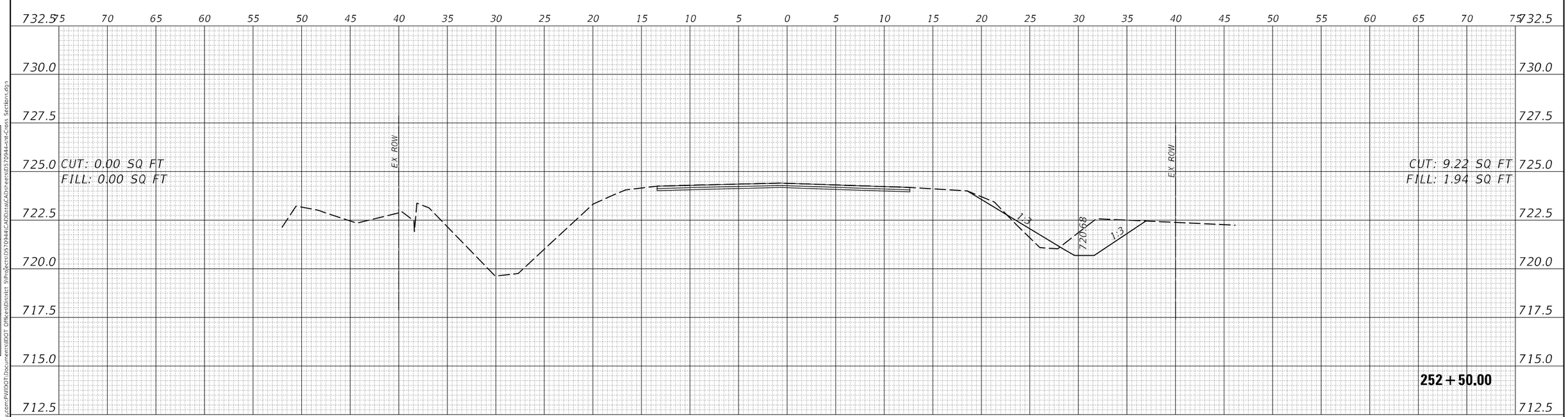

USER NAME = Tyler.Pierson	DESIGNED -	REVISED -	
	DRAWN -	REVISED -	
PLOT SCALE = 10.0000 ' / in.	CHECKED -	REVISED -	
PLOT DATE = 1/26/2023	DATE -	REVISED -	

STATE OF ILLINOIS
DEPARTMENT OF TRANSPORTATION

FAP 709 (US 136) CROSS-SECTIONS

SCALE: 1" = 5' | SHEET 11 OF 11 SHEETS | STA. 252+50.00 TO STA. 252+90.04

F.A.P. RTE.	SECTION	COUNTY	TOTAL SHEETS	SHEET NO.
709	(113)RS-7	CHAMPAIGN	103	103
		CONTRACT NO. 70944		
		ILLINOIS	FED. AID PROJECT	

FINAL SURVEY: SURVEYED, PLOTTED, TEMPLATE, AREAS, AREAS CHECKED, NOTE BOOK NO., BY, DATE

ORIGINAL SURVEY: SURVEYED, PLOTTED, TEMPLATE, AREAS, AREAS CHECKED, NOTE BOOK NO., BY, DATE

MODEL: sMODFIANMES
FILE NAME: pw:\\ildot-pw.bentley.com:PWIDOT\Documents\IDOT Offices\District 5\Projects\D570944\CAD\Data\CADsheets\D570944-sht-Cross Sections.dgn