04-28-2023 LETTING ITEM 038

F.A.I. RTE.	SECTION	COUNTY	TOTAL SHEETS	SHEET NO.
74A		MCLEAN	93	1
	ILLINOIS	CONTRACT NO. 70G08		

**(57-7)RS-3,(57-20)RS-4

STATE OF ILLINOIS
DEPARTMENT OF TRANSPORTATION

FOR INDEX OF SHEETS, SEE SHEET NO. 3
FOR SUMMARY OF QUANTITIES, SEE SHEET NO. 5 – 10

FOR CURRENT TRAFFIC DATA, SEE SHEET NO. 2
FOR MATERIAL TRANSFER DEVICE (MTD) INFORMATION, SEE SHEET NO. 2

PROPOSED HIGHWAY PLANS

F.A.I. ROUTE 74A / (I –74)
SECTION (57–7)RS–3,(57–20)RS–4
PROJECT NHPP–1DSY(203)
SMART OVERLAY
MCLEAN COUNTY

C–95–060–22

I–74: 0.4 MILE NORTH OF I–55 BUSINESS TO 0.3 MILE EAST OF US 51 AT BLOOMINGTON &
I–55 BUSINESS: I–55 TO 0.4 MILE NORTH

P-95-019-22

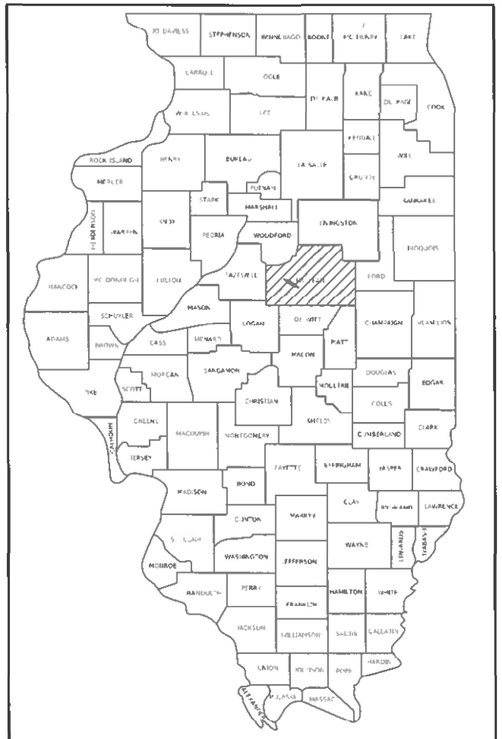

LOCATION OF SECTION INDICATED THUS:–

FUNCTIONAL CLASSIFICATION
INTERSTATE

DESIGN DESIGNATION
NA

TOWNSHIPS: BLOOMINGTON, BLOOMINGTON CITY

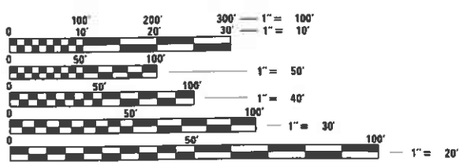

FULL SIZE PLANS HAVE BEEN PREPARED USING STANDARD ENGINEERING SCALES. REDUCED SIZED PLANS WILL NOT CONFORM TO STANDARD SCALES. IN MAKING MEASUREMENTS ON REDUCED PLANS, THE ABOVE SCALES MAY BE USED.

FOR DETAILED LOCATION MAP, SEE SHEET NO. 2

STATE OF ILLINOIS
DEPARTMENT OF TRANSPORTATION

SUBMITTED 1/25 2023
Kevin A. Garnett
REGIONAL ENGINEER

March 24, 2023
ENGINEER OF DESIGN AND ENVIRONMENT

March 24, 2023
DIRECTOR OF HIGHWAYS PROJECT IMPLEMENTATION

J.U.L.I.E.
JOINT UTILITY LOCATION INFORMATION FOR EXCAVATORS
1–800–892–0123
OR 811

PROJECT ENGINEER: JASON STULTS
SQUAD LEADER: GREG EAGLIN
PROJECT DESIGNER: STEVEN WOOD
PHONE:(217)–465–4181

CONTRACT NO. 70G08

GROSS LENGTH = 13805.00 FT. = 2.615 MILE
NET LENGTH = 13623.77 FT. = 2.580 MILE
(LENGTH CALCULATED ALONG I–74 EB; ROADWAY A)

PRINTED BY THE AUTHORITY OF THE STATE OF ILLINOIS

DETAILED LOCATION MAP
I-74 & I-55 IN BLOOMINGTON

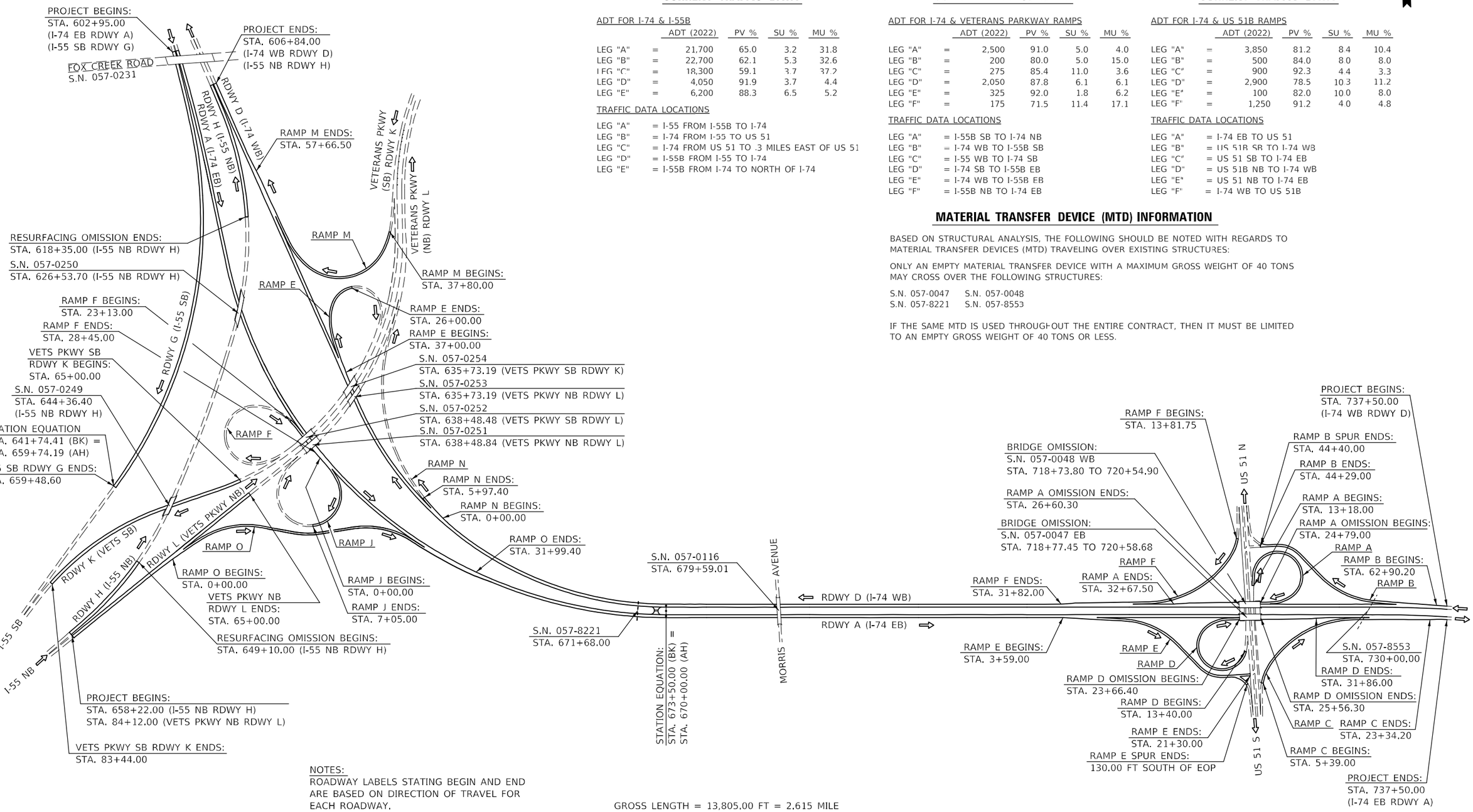

CURRENT TRAFFIC DATA

ADT FOR I-74 & I-55B

		ADT (2022)	PV %	SU %	MU %
LEG "A"	=	21,700	65.0	3.2	31.8
LEG "B"	=	22,700	62.1	5.3	32.6
LEG "C"	=	18,300	59.1	3.7	37.2
LEG "D"	=	4,050	91.9	3.7	4.4
LEG "E"	=	6,200	88.3	6.5	5.2

TRAFFIC DATA LOCATIONS

LEG "A" = I-55 FROM I-55B TO I-74
LEG "B" = I-74 FROM I-55 TO US 51
LEG "C" = I-74 FROM US 51 TO .3 MILES EAST OF US 51
LEG "D" = I-55B FROM I-55 TO I-74
LEG "E" = I-55B FROM I-74 TO NORTH OF I-74

CURRENT TRAFFIC DATA

ADT FOR I-74 & VETERANS PARKWAY RAMPS

		ADT (2022)	PV %	SU %	MU %
LEG "A"	=	2,500	91.0	5.0	4.0
LEG "B"	=	200	80.0	5.0	15.0
LEG "C"	=	275	85.4	11.0	3.6
LEG "D"	=	2,050	87.8	6.1	6.1
LEG "E"	=	325	92.0	1.8	6.2
LEG "F"	=	175	71.5	11.4	17.1

TRAFFIC DATA LOCATIONS

LEG "A" = I-55B SB TO I-74 NB
LEG "B" = I-74 WB TO I-55B SB
LEG "C" = I-55 WB TO I-74 SB
LEG "D" = I-74 SB TO I-55B EB
LEG "E" = I-74 WB TO I-55B EB
LEG "F" = I-55B NB TO I-74 EB

CURRENT TRAFFIC DATA

ADT FOR I-74 & US 51B RAMPS

		ADT (2022)	PV %	SU %	MU %
LEG "A"	=	3,850	81.2	8.4	10.4
LEG "B"	=	500	84.0	8.0	8.0
LEG "C"	=	900	92.3	4.4	3.3
LEG "D"	=	2,900	78.5	10.3	11.2
LEG "E"	=	100	82.0	10.0	8.0
LEG "F"	=	1,250	91.2	4.0	4.8

TRAFFIC DATA LOCATIONS

LEG "A" = I-74 EB TO US 51
LEG "B" = US 51B SB TO I-74 WB
LEG "C" = US 51 SB TO I-74 EB
LEG "D" = US 51B NB TO I-74 WB
LEG "E" = US 51 NB TO I-74 EB
LEG "F" = I-74 WB TO US 51B

MATERIAL TRANSFER DEVICE (MTD) INFORMATION

BASED ON STRUCTURAL ANALYSIS, THE FOLLOWING SHOULD BE NOTED WITH REGARDS TO MATERIAL TRANSFER DEVICES (MTD) TRAVELING OVER EXISTING STRUCTURES:

ONLY AN EMPTY MATERIAL TRANSFER DEVICE WITH A MAXIMUM GROSS WEIGHT OF 40 TONS MAY CROSS OVER THE FOLLOWING STRUCTURES:

S.N. 057-0047 S.N. 057-0048
S.N. 057-8221 S.N. 057-8553

IF THE SAME MTD IS USED THROUGHOUT THE ENTIRE CONTRACT, THEN IT MUST BE LIMITED TO AN EMPTY GROSS WEIGHT OF 40 TONS OR LESS.

NOTES:
ROADWAY LABELS STATING BEGIN AND END ARE BASED ON DIRECTION OF TRAVEL FOR EACH ROADWAY.

LOCATION MAP NOT TO SCALE

GROSS LENGTH = 13,805.00 FT = 2.615 MILE
NET LENGTH = 13,623.77 FT = 2.580 MILE
(LENGTH CALCULATED ALONG I-74 EB; ROADWAY A)

MODEL: $MODELNAME$
FILE NAME: pw:\\ildot-pw.bentley.com:PWIDOT\Documents\IDOT Offices\District 5\Projects\D570G08\CADData\CADSheets\D570G08-sht-LocMapDetail.dgn

USER NAME = Greg.Eaglin	DESIGNED -	REVISED -	
	DRAWN -	REVISED -	
PLOT SCALE = 40.0000 ' / in.	CHECKED -	REVISED -	
PLOT DATE = 1/25/2023	DATE -	REVISED -	

STATE OF ILLINOIS
DEPARTMENT OF TRANSPORTATION

DETAILED LOCATION MAP

SCALE: | SHEET 1 OF 1 SHEETS | STA. TO STA.

F.A.I. RTE.	SECTION	COUNTY	TOTAL SHEETS	SHEET NO.
74A	**	MCLEAN	93	2

CONTRACT NO. 70G08
ILLINOIS | FED. AID PROJECT

** (57-7)RS-3,(57-20)RS-4

INDEX OF SHEETS

LIST OF HIGHWAY STANDARDS

STANDARD NO.	NAME OF STANDARD
000001-08	STANDARD SYMBOLS, ABBREVIATIONS AND PATTERNS
001006	DECIMAL OF AN INCH AND OF A FOOT
442101-09	CLASS B PATCHES
482011-03	HMA SHOULDER STRIPS/SHOULDERS WITH RESURFACING OR WIDENING AND RESURFACING PROJECTS
630001-12	STEEL PLATE BEAM GUARDRAIL
630301-09	SHOULDER WIDENING FOR TYPE 1 (SPECIAL) GUARDRAIL TERMINALS
631032-10	TRAFFIC BARRIER TERMINAL,TYPE 6A
642001-03	SHOULER RUMBLE STRIPS, 16 INCH
701101-05	OFF-RD OPERATIONS,MULTILANE, 15' TO 24" FROM PAVEMENT EDGE
701201-05	LANE CLOSURE, 2L, 2W, DAY ONLY, FOR SPEEDS ≥ 45 MPH
701400-11	APPROACH TO LANE CLOSURE, FREEWAY/EXPRESSWAY
701401-13	LANE CLOSURE, FREEWAY/EXPRESSWAY
701406-13	LANE CLOSURE, FREEWAY/EXPRESSWAY, DAY OPERATIONS ONLY
701411-09	LANE CLOSURE, MULTILANE, AT ENTRANCE OR EXIT RAMP, FOR SPEEDS ≥ 45 MPH
701426-09	LANE CLOSURE, MULTILANE, INTERMITTEN OR MOVING OPERATIONS FOR SPEEDS ≥ 45 MPH
701428-01	TRAFFIC CONTROL SETUP AND REMOVAL FREEWAY/EXPRESSWAY
701446-11	TWO LANE CLOSURE, FREEWAY/ EXPRESSWAY
701451-05	RAMP CLOSURE FREEWAY/EXPRESSWAY
701901-08	TRAFFIC CONTROL DEVICES
725001-01	OBJECT AND TERMINAL MARKERS
780001-05	TYPICAL PAVEMENT MARKINGS
781001-04	TYPICAL APPLICATIONS RAISED REFLECTIVE PAVEMENT MARKERS
782006-01	GUARDRAIL AND BARRIER WALL REFLECTOR MOUNTING DETAILS

GENERAL NOTES

G.N.-100A
ELECTRONIC FILES AND/OR ELECTRONIC SURVEY INFORMATION INCLUDING CADD FILES WILL NOT BE AVAILABLE TO THE CONTRACTOR.

G.N.-105.09A
ALL ELEVATIONS SHOWN IN THE PLANS ARE BASED ON NORTH AMERICAN VERTICAL DATUM OF 1988. (NAVD 88)

G.N. - 406H
THE FOLLOWING MIXTURE REQUIREMENTS ARE APPLICABLE FOR THIS PROJECT:

Location	FAI 55 & 74; VETS PKWY	FAI 55 & 74; VETS PKWY	FAI 55 & 74
Mixture Use	Poly SMA Surface (Mainline)	Surface (Shoulders)	Poly Surface Ramps
AC/PG	SBS PG 76-22	PG 64-22	SBS PG 70-22
Design Air Voids	4.0% @ Ndes=80	4.0% @ Ndes=50	4.0% @ Ndes=90
Mix Comp(Gradation)	IL 12.5	IL 9.5	IL 9.5
Friction Aggregate	Mix E	Mix C	Mix E
Mixture Weight	112	112	112
Quality Management Program	PFP	QCP	QCP
Sublot Size	1000	1000	1000
Material Transfer Device (Required ?)	YES	NO	NO

Location	FAI 74
Mixture Use	Incidental (Crossover)
AC/PG	PG 64-22
Design Air Voids	4.0% @ Ndes=50
Mix Comp(Gradation)	IL 9.5
Friction Aggregate	Mix C
Mixture Weight	112
Quality Management Program	QC/QA
Sublot Size	3000
Material Transfer Device (Required ?)	NO

G.N. 406S
PROJECT POSTED SPEED LIMITS

THE FOLLOWING TABLE IS A LISTING OF POSTED SPEED LIMITS WITHIN THE PROJECT LIMITS. THE ENGINEER SHALL FIELD VERIFY THESE LIMITS:

LOCATION	STATION	TO	STATION	POSTED SPEED LIMIT (MPH)
FAI 74 (I-74 EB)	602+95.00		737+50.00	70
FAI 74 (I-74 WB)	737+50.00		606+84.00	70
FAI 55 (I-55 NB)	658+22.00		606+84.00	70
FAI 55 (I-55 SB)	602+95.00		659+48.60	70
VETERANS PARKWAY (NB)	65+00.00		83+44.00	55
VETERANS PARKWAY (SB)	84+12.00		65+00.00	55

G.N.-408B
THE INCIDENTAL HOT-MIX ASPHALT SURFACING SHALL BE COMPACTED AS REQUIRED BY THE SPECIFICATIONS FOR DESIGN NUMBER OF GYRATIONS BEING USED,

AT THE FOLLOWING LOCATIONS:
I-74 E.B. MEDIAN CROSSOVER: STA. 672+85.60
I-74 W.B. MEDIAN CROSSOVER: STA. 669+38.30

G.N - 703A
SHORT TERM PAVEMENT MARKING SHALL BE APPLIED TO THE PAVEMENT AFTER ANY OF THE FOLLOWING: COLD MILLING AND/OR PLACING BITUMINOUS MATERIALS (TACK COAT), LEVELING BINDER (MACHINE METHOD), BINDER AND SURFACE COURSES. SHORT TERM PAVEMENT MARKING PLACED ON THE SURFACE SHALL COINCIDE WITH THE FINAL PAVEMENT STRIPING. SHORT TERM PAVEMENT MARKING PLACED PRIOR TO THE SURFACE SHALL COINCIDE WITH THE EXISTING PAVEMENT MARKINGS. USE 4 FEET PER 40 FEET (OR 10% PER STATION)

G.N - 781
THE FINAL PAVEMENT MARKINGS SHALL BE IN PLACE PRIOR TO PLACING THE RAISED REFLECTIVE PAVEMENT MARKERS.

STRUCTURE INFORMATION:

BASED ON STRUCTURAL ANALYSIS, THE FOLLOWING SHOULD BE NOTED WITH REGARDS TO MATERIAL TRANSFER DEVICES (MTD) TRAVELING OVER EXISTING STRUCTURES:

ONLY AN EMPTY MATERIAL TRANSFER DEVICE WITH A MAXIMUM GROSS WEIGHT OF 40 TONS MAY CROSS OVER THE FOLLOWING STRUCTURES:

S.N. 057-0047 S.N. 057-0048
S.N. 057-8221 S.N. 057-8553

IF THE SAME MTD IS USED THROUGHOUT THE ENTIRE CONTRACT, THEN IT MUST BE LIMITED TO AN EMPTY GROSS WEIGHT OF 40 TONS OR LESS.

COMMITMENTS:

THERE ARE NO COMMITMENTS FOR THIS PROJECT.

SUMMARY OF QUANTITIES

LOCATION OF WORK: FAI 74A / (I-74)
URBAN 4 LANE
COUNTY: MCLEAN
STA. 602+95.00
TO
STA. 737+50.00

FUNDING BREAKOUT: 90% FED
10% STATE

CONSTRUCTION CODE: 0005

	CODE NO	ITEM	UNIT		TOTAL QUANTITY
	20400800	FURNISHED EXCAVATION	CU YD		50.0
	25000210	SEEDING, CLASS 2A	ACRE		0.25
	25000400	NITROGEN FERTILIZER NUTRIENT	POUND		10.0
	25000500	PHOSPHORUS FERTILIZER NUTRIENT	POUND		10.0
	25000600	POTASSIUM FERTILIZER NUTRIENT	POUND		10.0
	25100115	MULCH, METHOD 2	ACRE		0.25
	40600290	BITUMINOUS MATERIALS (TACK COAT)	POUND		91,680.0
	40600372	LONGITUDINAL JOINT SEALANT, HALF-WIDTH	FOOT		72,466.0
	40600990	TEMPORARY RAMP	SQ YD		942.0
	40604174	POLYMERIZED HOT-MIX ASPHALT SURFACE COURSE, IL-9.5, MIX "E", N90	TON		3,197.0
	40605034	POLYMERIZED HOT-MIX ASPHALT SURFACE COURSE, STONE MATRIX ASPHALT, 12.5, MIX "E", N80	TON		10,822.0

* SPECIALTY ITEM

SUMMARY OF QUANTITIES

LOCATION OF WORK: FAI 74A / (I-74)
URBAN 4 LANE
COUNTY: MCLEAN
STA. 602+95.00
TO
STA. 737+50.00

FUNDING BREAKOUT: 90% FED
10% STATE

CONSTRUCTION CODE: 0005

CODE NO	ITEM	UNIT		TOTAL QUANTITY
40800029	BITUMINOUS MATERIALS (TACK COAT)	POUND		87.0
40800050	INCIDENTAL HOT-MIX ASPHALT SURFACING	TON		22.0
44000157	HOT-MIX ASPHALT SURFACE REMOVAL, 2"	SQ YD		196,935.0
44200050	WELDED WIRE REINFORCEMENT	SQ YD		160.0
44201031	CLASS B PATCHES, TYPE II, 15 INCH	SQ YD		128.0
44201035	CLASS B PATCHES, TYPE III, 15 INCH	SQ YD		40.0
44201037	CLASS B PATCHES, TYPE IV, 15 INCH	SQ YD		120.0
44201299	DOWEL BARS 1 1/2"	EACH		468.0
44213200	SAW CUTS	FOOT		1,128.0
44213204	TIE BARS 3/4"	EACH		30.0
48102100	AGGREGATE WEDGE SHOULDER, TYPE B	TON		2,053.0

* SPECIALTY ITEM

SUMMARY OF QUANTITIES

LOCATION OF WORK: FAI 74A / (I-74)
URBAN 4 LANE
COUNTY: MCLEAN
STA. 602+95.00
TO
STA. 737+50.00

FUNDING BREAKOUT: 90% FED
10% STATE

CONSTRUCTION CODE: 0005

	CODE NO	ITEM	UNIT		TOTAL QUANTITY
	48203100	HOT-MIX ASPHALT SHOULDERS	TON		8,056.0
*	63000003	STEEL PLATE BEAM GUARDRAIL, TYPE A, 9 FOOT POSTS	FOOT		1,525.0
*	63100167	TRAFFIC BARRIER TERMINAL, TYPE 1 (SPECIAL) TANGENT	EACH		6.0
	63200310	GUARDRAIL REMOVAL	FOOT		1,975.0
	64200116	SHOULDER RUMBLE STRIPS, 16 INCH	FOOT		60,642.0
	67100100	MOBILIZATION	L SUM		1.0
	70100420	TRAFFIC CONTROL AND PROTECTION, STANDARD 701411	EACH		14.0
	70100450	TRAFFIC CONTROL AND PROTECTION, STANDARD 701201	L SUM		1.0
	70100700	TRAFFIC CONTROL AND PROTECTION, STANDARD 701406	L SUM		1.0
	70100800	TRAFFIC CONTROL AND PROTECTION, STANDARD 701401	L SUM		1.0
	70100815	TRAFFIC CONTROL AND PROTECTION, STANDARD 701446	L SUM		1.0
	70100820	TRAFFIC CONTROL AND PROTECTION, STANDARD 701451	L SUM		1.0

* SPECIALTY ITEM

SUMMARY OF QUANTITIES

LOCATION OF WORK: FAI 74A / (I-74)
URBAN 4 LANE
COUNTY: MCLEAN
STA. 602+95.00
TO
STA. 737+50.00

FUNDING BREAKOUT: 90% FED
10% STATE

CONSTRUCTION CODE: 0005

	CODE NO	ITEM	UNIT		TOTAL QUANTITY
	70107025	CHANGEABLE MESSAGE SIGN	CAL DA		141.0
	70200100	NIGHTTIME WORK ZONE LIGHTING	L SUM		1.0
	70300100	SHORT TERM PAVEMENT MARKING	FOOT		14,820.0
	70300150	SHORT TERM PAVEMENT MARKING REMOVAL	SQ FT		2,470.0
	70300211	TEMPORARY PAVEMENT MARKING LETTERS AND SYMBOLS - PAINT	SQ FT		163.0
	70300241	TEMPORARY PAVEMENT MARKING - LINE 6"- PAINT	FOOT		98,194.0
	70300251	TEMPORARY PAVEMENT MARKING - LINE 8"- PAINT	FOOT		10,133.0
	70300261	TEMPORARY PAVEMENT MARKING - LINE 12"- PAINT	FOOT		705.0
	70300281	TEMPORARY PAVEMENT MARKING - LINE 24"- PAINT	FOOT		16.0
*	72501000	TERMINAL MARKER - DIRECT APPLIED	EACH		6.0
*	78000100	THERMOPLASTIC PAVEMENT MARKING - LETTERS AND SYMBOLS	SQ FT		163.0
*	78000400	THERMOPLASTIC PAVEMENT MARKING - LINE 6"	FOOT		98,194.0

* SPECIALTY ITEM

SUMMARY OF QUANTITIES

LOCATION OF WORK: FAI 74A / (I-74)
URBAN 4 LANE
COUNTY: MCLEAN
STA. 602+95.00
TO
STA. 737+50.00

FUNDING BREAKOUT: 90% FED
10% STATE

CONSTRUCTION CODE: 0005

	CODE NO	ITEM	UNIT		TOTAL QUANTITY
*	78000500	THERMOPLASTIC PAVEMENT MARKING - LINE 8"	FOOT		10,133.0
*	78000600	THERMOPLASTIC PAVEMENT MARKING - LINE 12"	FOOT		705.0
*	78000650	THERMOPLASTIC PAVEMENT MARKING - LINE 24"	FOOT		16.0
*	78011000	GROOVING FOR RECESSED PAVEMENT MARKING, LETTERS AND SYMBOLS	SQ FT		163.0
*	78011035	GROOVING FOR RECESSED PAVEMENT MARKING 7"	FOOT		98,194.0
*	78011045	GROOVING FOR RECESSED PAVEMENT MARKING 9"	FOOT		10,133.0
*	78011065	GROOVING FOR RECESSED PAVEMENT MARKING 13"	FOOT		705.0
*	78011125	GROOVING FOR RECESSED PAVEMENT MARKING 25"	FOOT		16.0
*	78100100	RAISED REFLECTIVE PAVEMENT MARKER	EACH		1,375.0
*	78200005	GUARDRAIL REFLECTORS, TYPE A	EACH		24.0
	78300200	RAISED REFLECTIVE PAVEMENT MARKER REMOVAL	EACH		1,326.0

* SPECIALTY ITEM

SUMMARY OF QUANTITIES

LOCATION OF WORK: FAI 74A / (I-74)
URBAN 4 LANE
COUNTY: MCLEAN
STA. 602+95.00
TO
STA. 737+50.00

FUNDING BREAKOUT: 90% FED
10% STATE

CONSTRUCTION CODE: 0005

	CODE NO	ITEM	UNIT		TOTAL QUANTITY
*	X0327640	REAL-TIME TRAFFIC CONTROL CENTRAL BASE UNIT	CAL MO		5.0
*	X0328005	REAL-TIME TRAFFIC MONITORING SENSOR UNIT	CAL MO		120.0
*	X0328006	REAL-TIME TRAFFIC CONTROL WARNING SIGN	CAL MO		60.0
	X2700001	TEMPORARY RUMBLE STRIPS (SPECIAL)	EACH		28.0
	X4400196	HOT-MIX ASPHALT SURFACE REMOVAL, SPECIAL	SQ YD		193.0
*	X6310188	TRAFFIC BARRIER TERMINAL, TYPE 6A (MODIFIED)	EACH		4.0
	Z0001800	APPROACH SLAB REPAIR (PARTIAL DEPTH)	SQ YD		254.0
	Z0013798	CONSTRUCTION LAYOUT	L SUM		1.0
Ø	Z0076600	TRAINEES	HOUR		1,000
	Z0016702	DETOUR SICNING	L SUM		1.0
Ø	Z0076604	TRAINEES - TRAINING PROGRAM GRADUATE	HOUR		1,000
	Z0034105	MATERIAL TRANSFER DEVICE	TON		10,822.0

* SPECIALTY ITEM

Ø 0042

Ⓐ EXISTING TYPICAL CROSS SECTION

STATION TO STATION
602+95.00 606+50.00 (ROADWAY A; I-74 EB) Ⓒ

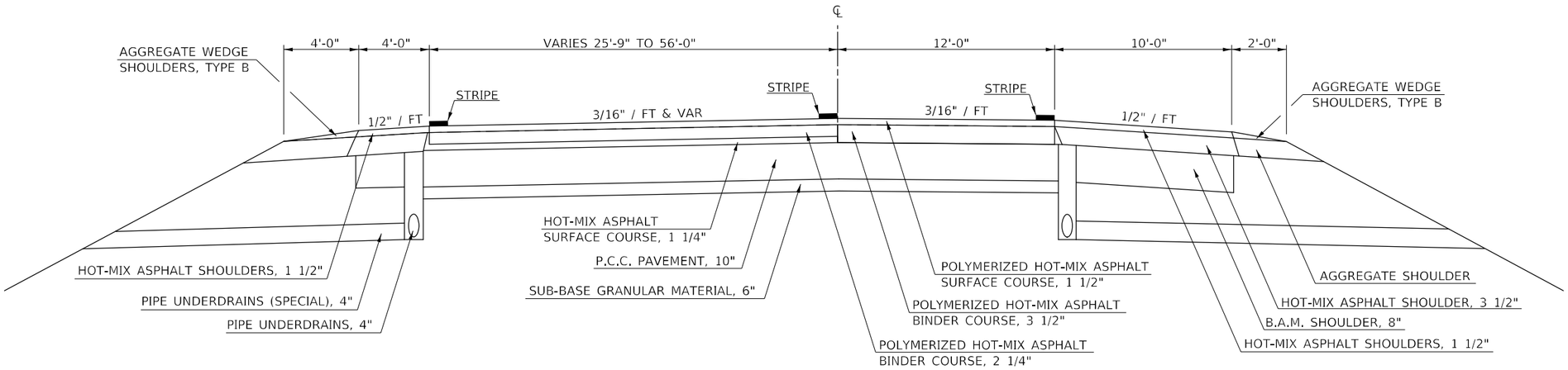

① PROPOSED TYPICAL CROSS SECTION

STATION TO STATION
602+95.00 606+50.00 (ROADWAY A; I-74 EB) ③

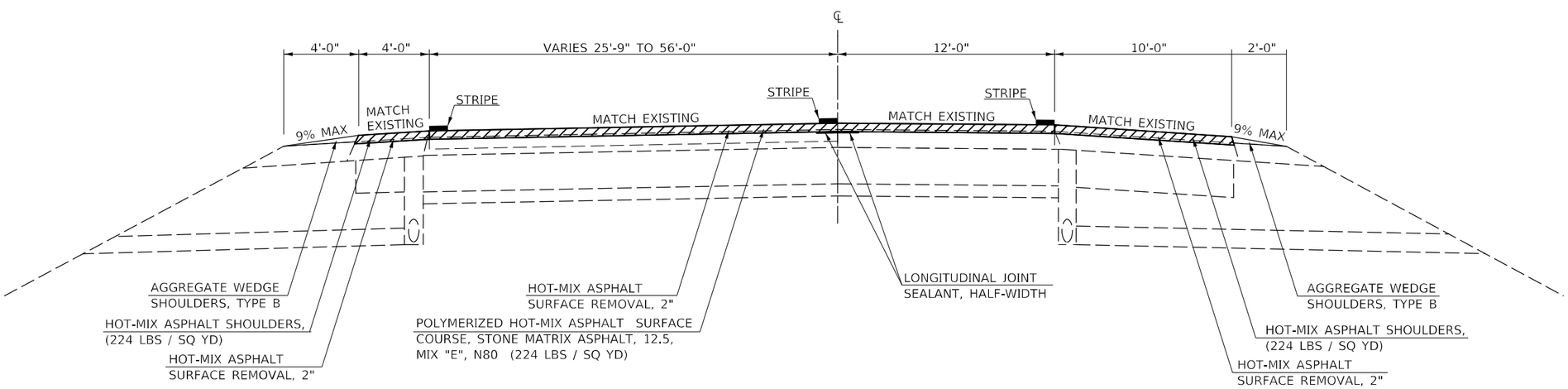

HOT-MIX ASPHALT SURFACE REMOVAL, 2"

MODEL: $MODEL NAMES
FILE NAME: pw:\\ildot-pw.bentley.com:PWIDOT\Documents\IDOT Offices\District 5\Projects\D570G08\CADData\CADsheets\D570G08-sht-Typical.dgn

USER NAME = Greg.Eaglin	DESIGNED -	REVISED -	STATE OF ILLINOIS DEPARTMENT OF TRANSPORTATION
	DRAWN -	REVISED -	
PLOT SCALE = 40.0000 ' / in.	CHECKED -	REVISED -	
PLOT DATE = 1/25/2023	DATE -	REVISED -	

TYPICAL CROSS SECTION

SCALE: SHEET 1 OF 11 SHEETS STA. TO STA.

F.A.I. RTE.	SECTION	COUNTY	TOTAL SHEETS	SHEET NO.
74A	**	MCLEAN	93	11
		CONTRACT NO. 70G08		
		ILLINOIS FED. AID PROJECT		

** (57-7)RS-3,(57-20)RS-4

(B) EXISTING TYPICAL CROSS SECTION

STATION	TO	STATION
602+95.00		606+50.00 (ROADWAY G; I-55 SB) (D)

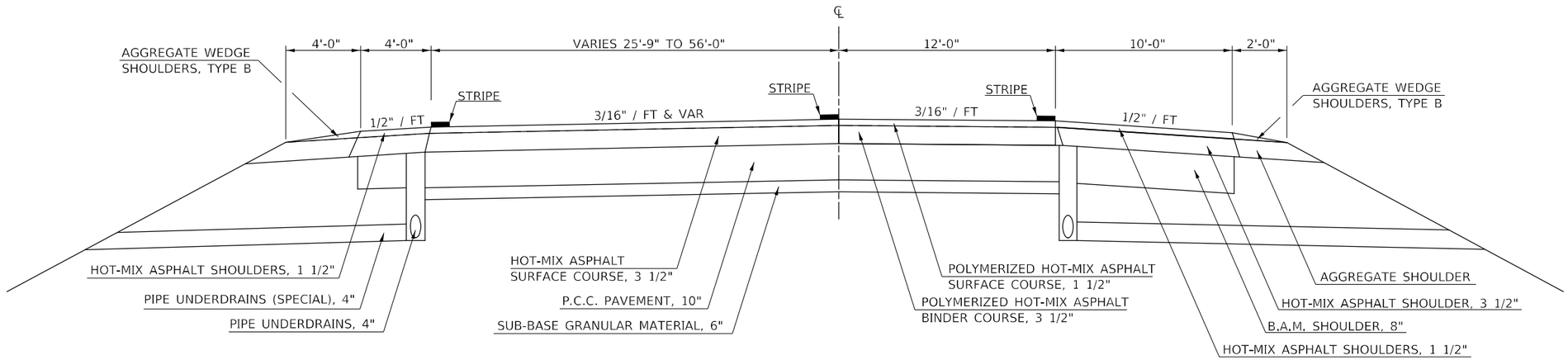

(2) PROPOSED TYPICAL CROSS SECTION

STATION	TO	STATION
602+95.00		606+50.00 (ROADWAY G; I-55 SB) (4)

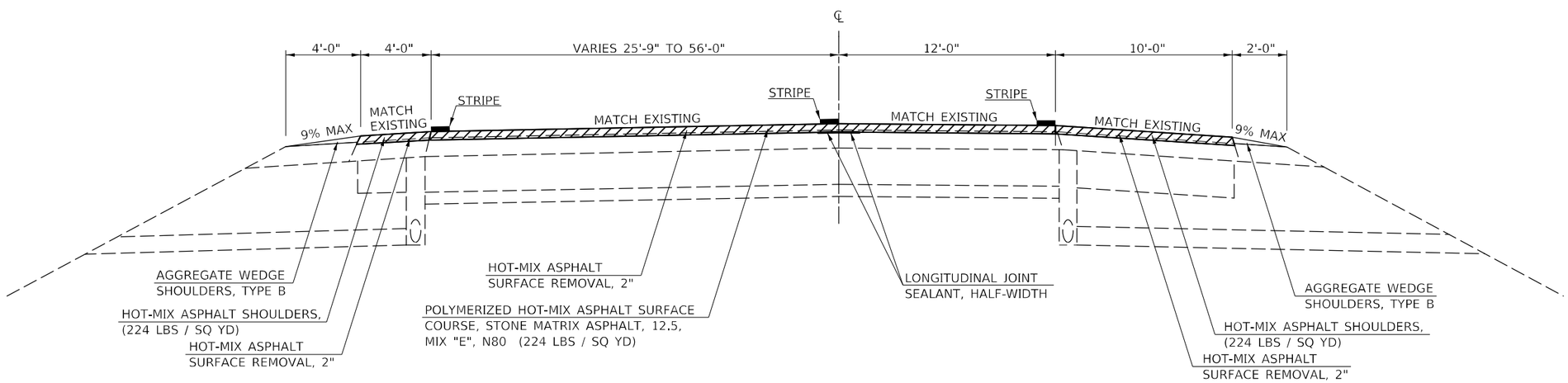

HOT-MIX ASPHALT SURFACE REMOVAL, 2"

MODEL: $MODEL NAMES
FILE NAME: pw:\\ildot-pw.bentley.com:PWIDOT\Documents\IDOT Offices\District 5\Projects\D570G08\CADData\CADsheets\D570G08-sht-Typical.dgn

USER NAME = Greg.Eaglin	DESIGNED -	REVISED -	
	DRAWN -	REVISED -	
PLOT SCALE = 40.0000 ' / in.	CHECKED -	REVISED -	
PLOT DATE = 1/25/2023	DATE -	REVISED -	

STATE OF ILLINOIS
DEPARTMENT OF TRANSPORTATION

TYPICAL CROSS SECTION

SCALE: | SHEET 2 OF 11 SHEETS | STA. TO STA.

F.A.I. RTE.	SECTION	COUNTY	TOTAL SHEETS	SHEET NO.
74A	**	MCLEAN	93	12
		CONTRACT NO. 70G08		
		ILLINOIS FED. AID PROJECT		

** (57-7)RS-3,(57-20)RS-4

Ⓒ EXISTING TYPICAL CROSS SECTION

STATION	TO	STATION
Ⓐ 606+50.00		608+50.00 (ROADWAY A; I-74 EB) Ⓗ
606+84.00		610+90.00 (ROADWAY D; I-74 WB) Ⓗ

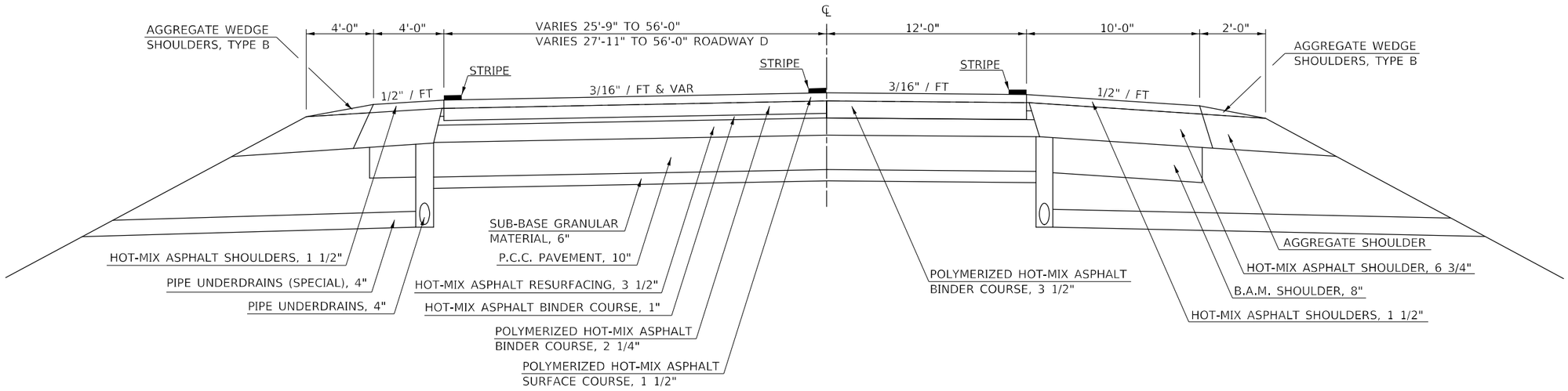

③ PROPOSED TYPICAL CROSS SECTION

STATION	TO	STATION
① 606+50.00		608+50.00 (ROADWAY A; I-74 EB) ⑧
606+84.00		610+90.00 (ROADWAY D; I-74 WB) ⑧

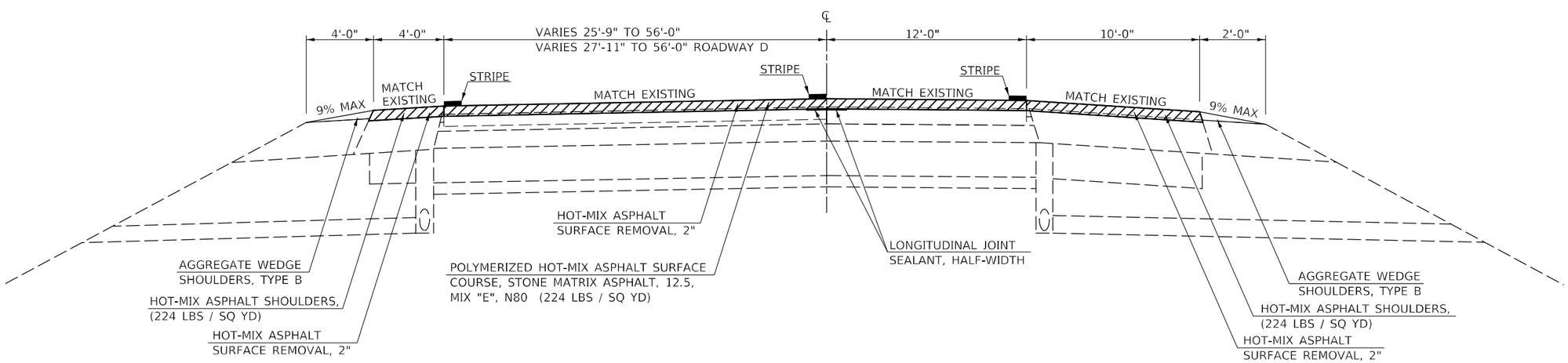

HOT-MIX ASPHALT SURFACE REMOVAL, 2"

MODEL: $MODEL NAMES
FILE NAME: pw:\\ildot-pw.bentley.com:PWIDOT\Documents\IDOT Offices\District 5\Projects\D570G08\CADData\CADsheets\D570G08-sht-Typical.dgn

USER NAME = Greg.Eaglin	DESIGNED -	REVISED -	
	DRAWN -	REVISED -	
PLOT SCALE = 40.0000 ' / in.	CHECKED -	REVISED -	
PLOT DATE = 1/25/2023	DATE -	REVISED -	

STATE OF ILLINOIS
DEPARTMENT OF TRANSPORTATION

TYPICAL CROSS SECTION

SCALE: | SHEET 3 OF 11 SHEETS | STA. TO STA.

F.A.I. RTE.	SECTION	COUNTY	TOTAL SHEETS	SHEET NO.
74A	**	MCLEAN	93	13
		CONTRACT NO. 70G08		
	ILLINOIS	FED. AID PROJECT		

** (57-7)RS-3,(57-20)RS-4

(D) EXISTING TYPICAL CROSS SECTION

STATION	TO	STATION
(B) 606+50.00		608+50.00 (ROADWAY G; I-55 SB) (E)

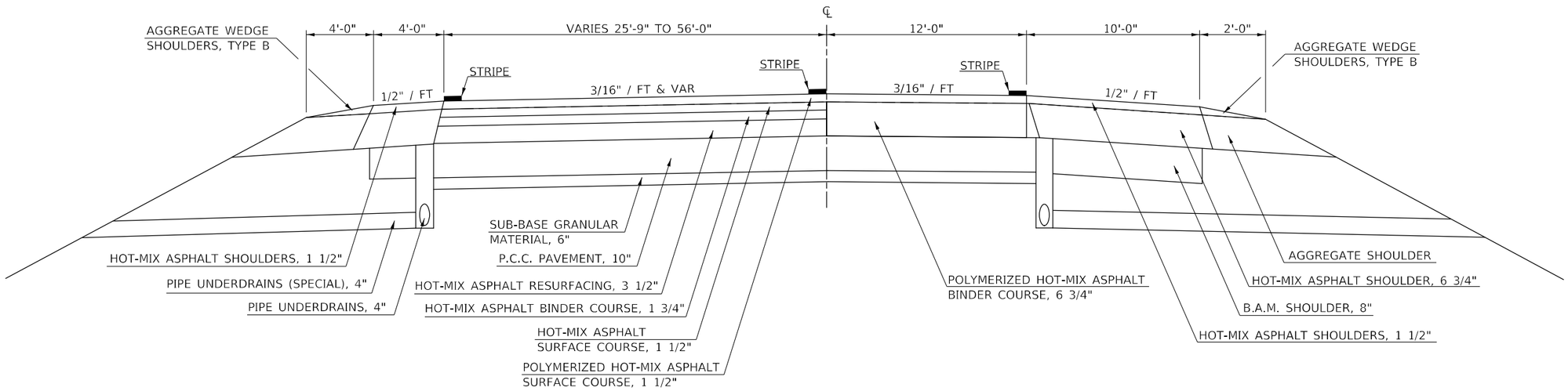

(4) PROPOSED TYPICAL CROSS SECTION

STATION	TO	STATION
(2) 606+50.00		608+50.00 (ROADWAY G; I-55 SB) (5)

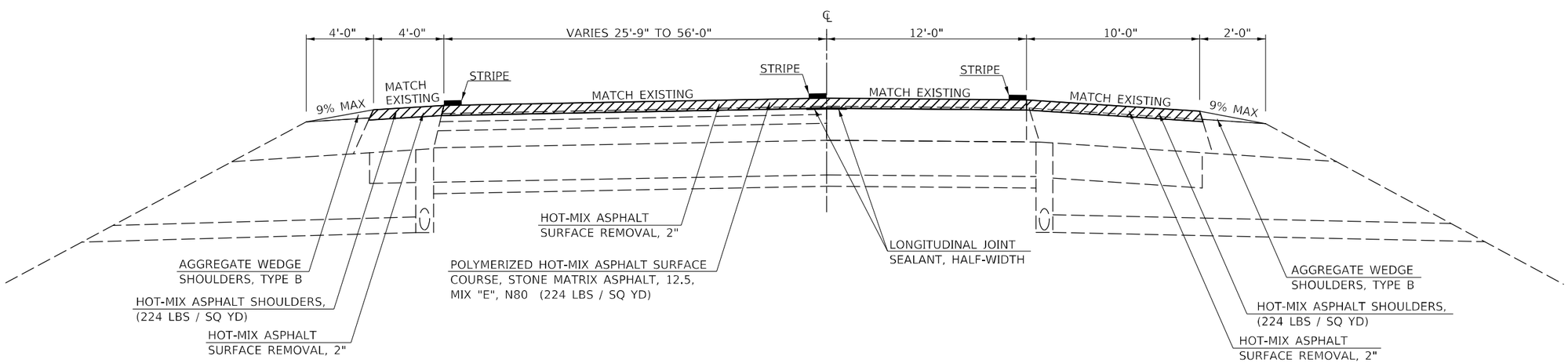

MODEL: $MODELNAMES
FILE NAME: pw:\\ildot-pw.bentley.com:PWIDOT\Documents\IDOT Offices\District 5\Projects\D570G08\CADData\CADsheets\D570G08-sht-Typical.dgn

USER NAME = Greg.Eaglin	DESIGNED -	REVISED -	
	DRAWN -	REVISED -	
PLOT SCALE = 40.0000 ' / in.	CHECKED -	REVISED -	
PLOT DATE = 1/25/2023	DATE -	REVISED -	

STATE OF ILLINOIS
DEPARTMENT OF TRANSPORTATION

TYPICAL CROSS SECTION

SCALE: | SHEET 4 OF 11 SHEETS | STA. TO STA.

F.A.I. RTE.	SECTION	COUNTY	TOTAL SHEETS	SHEET NO.
74A	**	MCLEAN	93	14
		CONTRACT NO. 70G08		
		ILLINOIS FED. AID PROJECT		

** (57-7)RS-3,(57-20)RS-4

**STA. 608+50.00 TO STA. 639+76.00 (ROADWAY G) S.E. = 0.013%

(E) EXISTING TYPICAL CROSS SECTION

STATION	TO	STATION
(D) 608+50.00		659+48.60 (ROADWAY G; I-55 SB)

STATION EQUATION:
STA. 641+74.41 (BK) =
STA. 659+74.19 (AH)

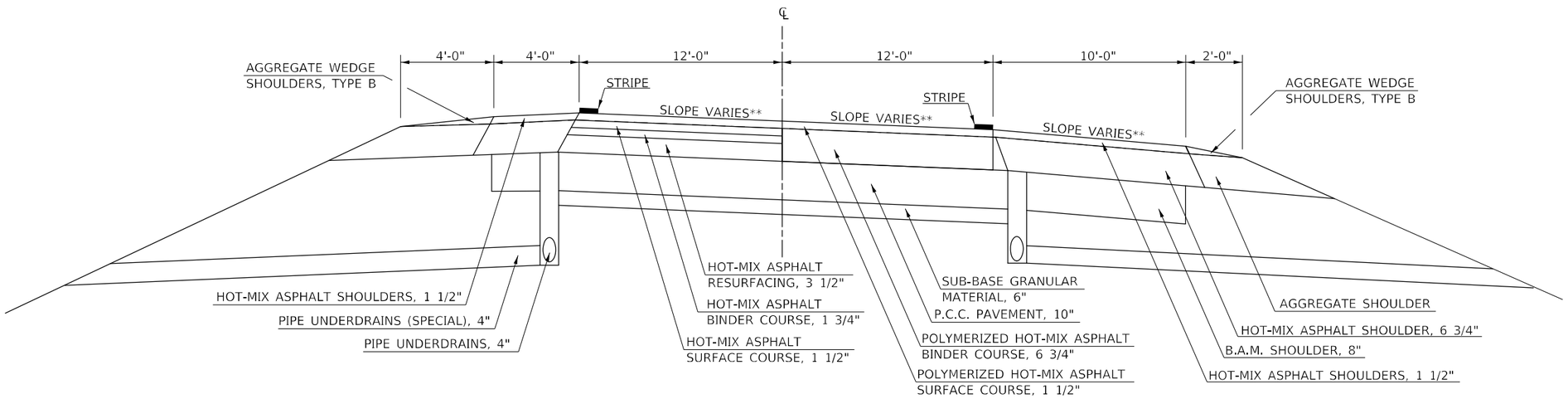

**STA. 608+50.00 TO STA. 639+76.00 (ROADWAY G) S.E. = 0.013%

(5) PROPOSED TYPICAL CROSS SECTION

STATION	TO	STATION
(4) 608+50.00		659+48.60 (ROADWAY G; I-55 SB)

STATION EQUATION:
STA. 641+74.41 (BK) =
STA. 659+74.19 (AH)

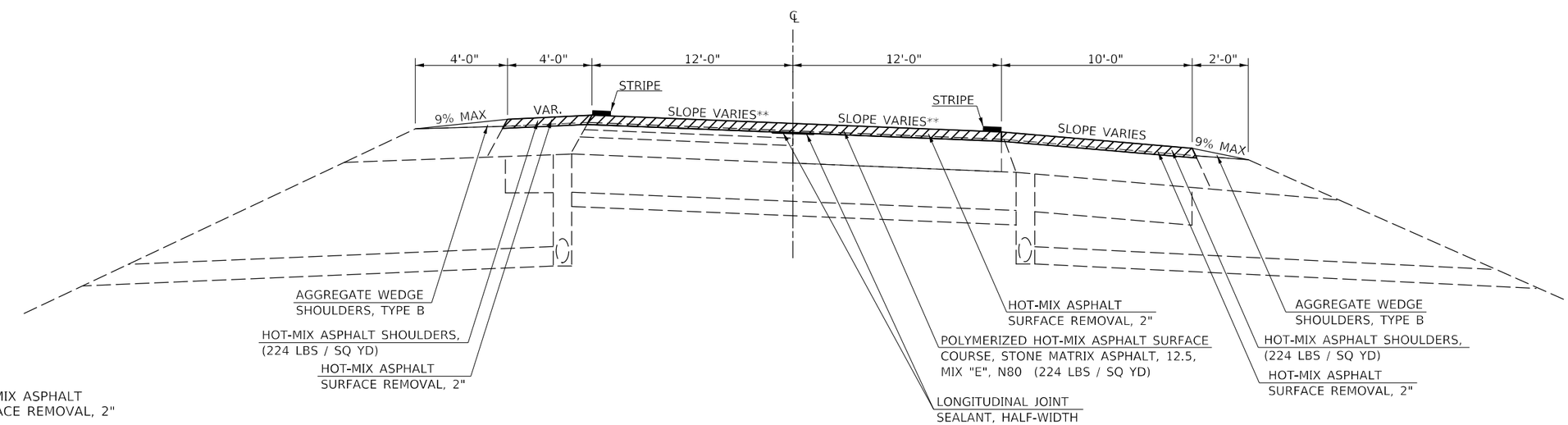

MODEL: $MODEL NAMES
FILE NAME: pw:\\ildot-pw.bentley.com:PWIDOT\Documents\IDOT Offices\District 5\Projects\D570G08\CADData\CADsheets\D570G08-sht-Typical.dgn

USER NAME = Greg.Eaglin	DESIGNED -	REVISED -	
	DRAWN -	REVISED -	
PLOT SCALE = 40.0000 ' / in.	CHECKED -	REVISED -	
PLOT DATE = 1/25/2023	DATE -	REVISED -	

STATE OF ILLINOIS
DEPARTMENT OF TRANSPORTATION

TYPICAL CROSS SECTION

SCALE: | SHEET 5 OF 11 SHEETS | STA. TO STA.

F.A.I. RTE.	SECTION	COUNTY	TOTAL SHEETS	SHEET NO.
74A	**	MCLEAN	93	15
		CONTRACT NO. 70G08		
	ILLINOIS	FED. AID PROJECT		

** (57-7)RS-3,(57-20)RS-4

(F) EXISTING TYPICAL CROSS SECTION

STATION	TO	STATION
606+84.00		614+00.00 (ROADWAY H; I-55 NB) (G)
(G) 656+00.00		658+22.00 (ROADWAY H; I-55 NB)

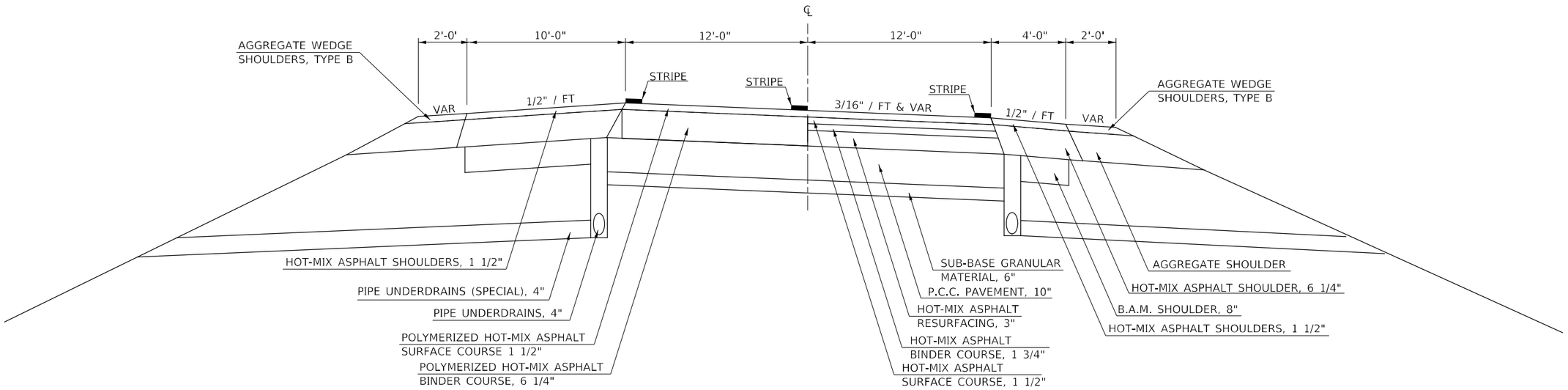

(6) PROPOSED TYPICAL CROSS SECTION

STATION	TO	STATION
606+84.00		614+00.00 (ROADWAY H; I-55 NB) (7)
(7) 656+00.00		658+22.00 (ROADWAY H; I-55 NB)

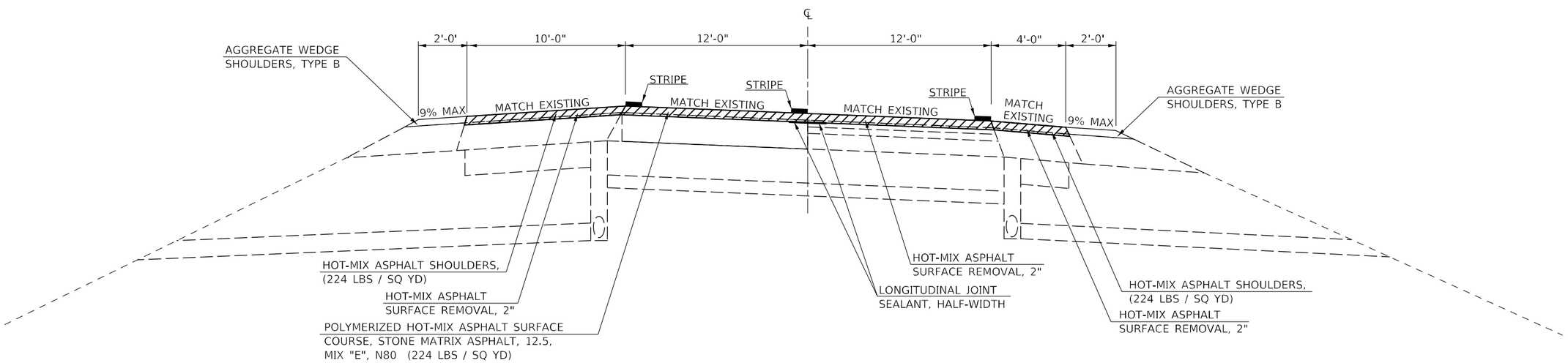

MODEL: $MODEL NAMES
FILE NAME: pw:\\ildot-pw.bentley.com:PWIDOT\Documents\IDOT Offices\District 5\Projects\D570G08\CADData\CADsheets\D570G08-sht-Typical.dgn

USER NAME = Greg.Eaglin	DESIGNED -	REVISED -	
	DRAWN -	REVISED -	
PLOT SCALE = 40.0000 ' / in.	CHECKED -	REVISED -	
PLOT DATE = 1/25/2023	DATE -	REVISED -	

STATE OF ILLINOIS
DEPARTMENT OF TRANSPORTATION

TYPICAL CROSS SECTION

SCALE: | SHEET 6 OF 11 SHEETS | STA. TO STA.

F.A.I. RTE.	SECTION	COUNTY	TOTAL SHEETS	SHEET NO.
74A	**	MCLEAN	93	16
		CONTRACT NO. 70G08		
		ILLINOIS FED. AID PROJECT		

** (57-7)RS-3,(57-20)RS-4

Ⓖ EXISTING TYPICAL CROSS SECTION

STATION	TO	STATION
Ⓕ 614+00.00		618+35.00 (ROADWAY H; I-55 NB)
649+10.00		656+00.00 (ROADWAY H; I-55 NB) Ⓕ

RESURFACING OMISSION:
STA. 618+35.00 TO STA. 649+10.00

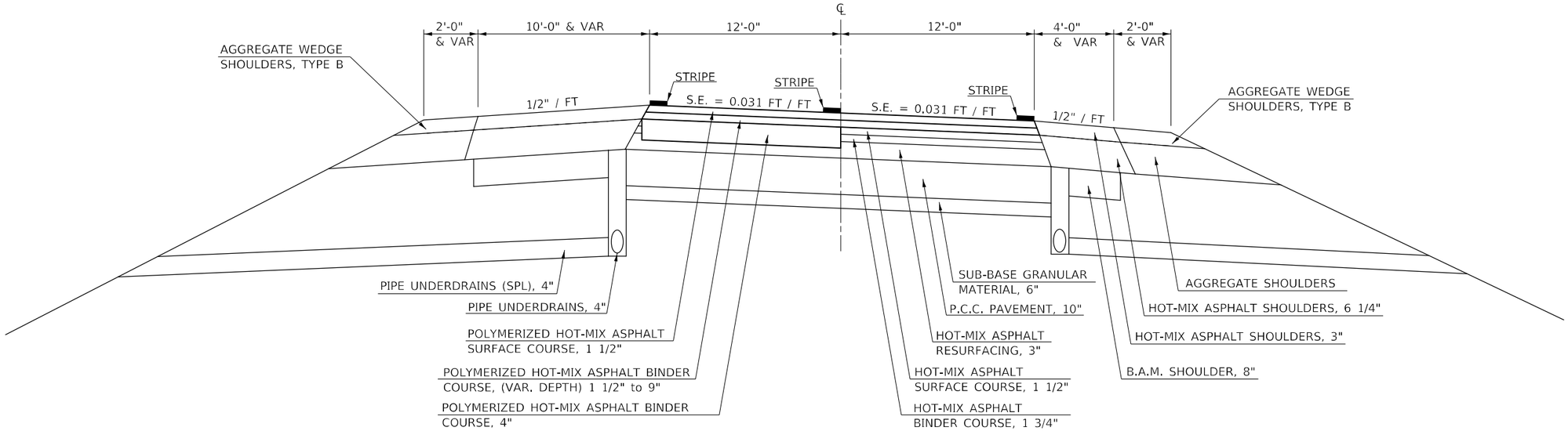

7 PROPOSED TYPICAL CROSS SECTION

STATION	TO	STATION
Ⓖ 614+00.00		618+35.00 (ROADWAY H; I-55 NB)
649+10.00		656+00.00 (ROADWAY H; I-55 NB) Ⓖ

RESURFACING OMISSION:
STA. 618+35.00 TO STA. 649+10.00

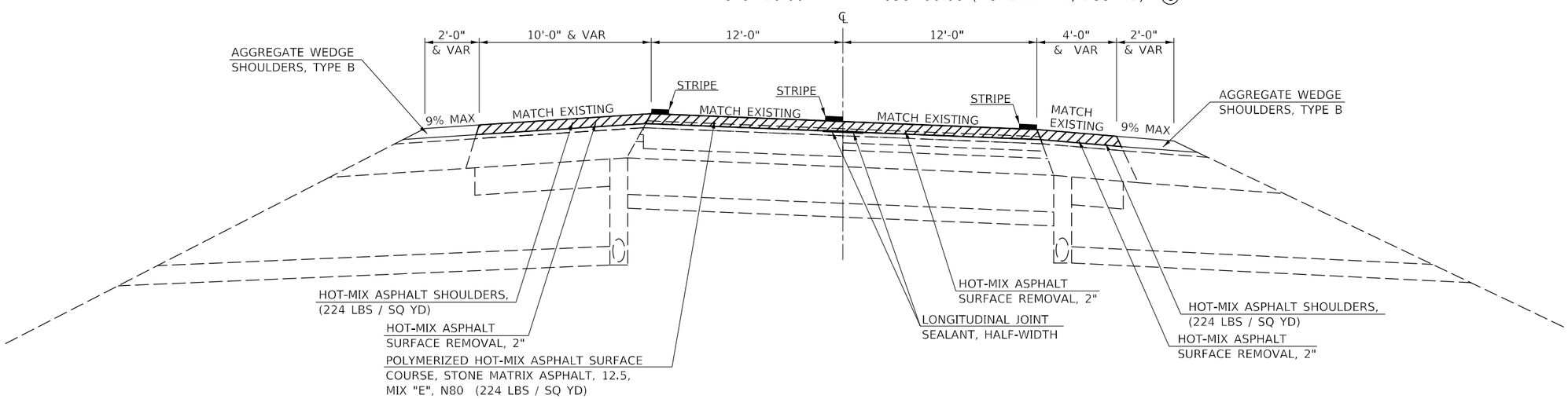

MODEL: $MODEL NAMES
FILE NAME: pw:\\ildot-pw.bentley.com:PWIDOT\Documents\IDOT Offices\District 5\Projects\D570G08\CADData\CADsheets\D570G08-sht-Typical.dgn

USER NAME = Greg.Eaglin	DESIGNED -	REVISED -	STATE OF ILLINOIS DEPARTMENT OF TRANSPORTATION
	DRAWN -	REVISED -	
PLOT SCALE = 40.0000 ' / in.	CHECKED -	REVISED -	
PLOT DATE = 1/25/2023	DATE -	REVISED -	

TYPICAL CROSS SECTION

SCALE: | SHEET 7 OF 11 SHEETS | STA. | TO STA.

F.A.I. RTE.	SECTION	COUNTY	TOTAL SHEETS	SHEET NO.
74A	**	MCLEAN	93	17
		CONTRACT NO. 70G08		
	ILLINOIS	FED. AID PROJECT		

** (57-7)RS-3,(57-20)RS-4

(H) EXISTING TYPICAL CROSS SECTION

STATION	TO	STATION
(C) 608+50.00		737+50.00 (ROADWAY A; I-74 EB)
(C) 610+90.00		737+50.00 (ROADWAY D; I-74 WB)

STATION EQUATION:
STA. 673+50.00 (BK) =
STA. 670+00.00 (AH)

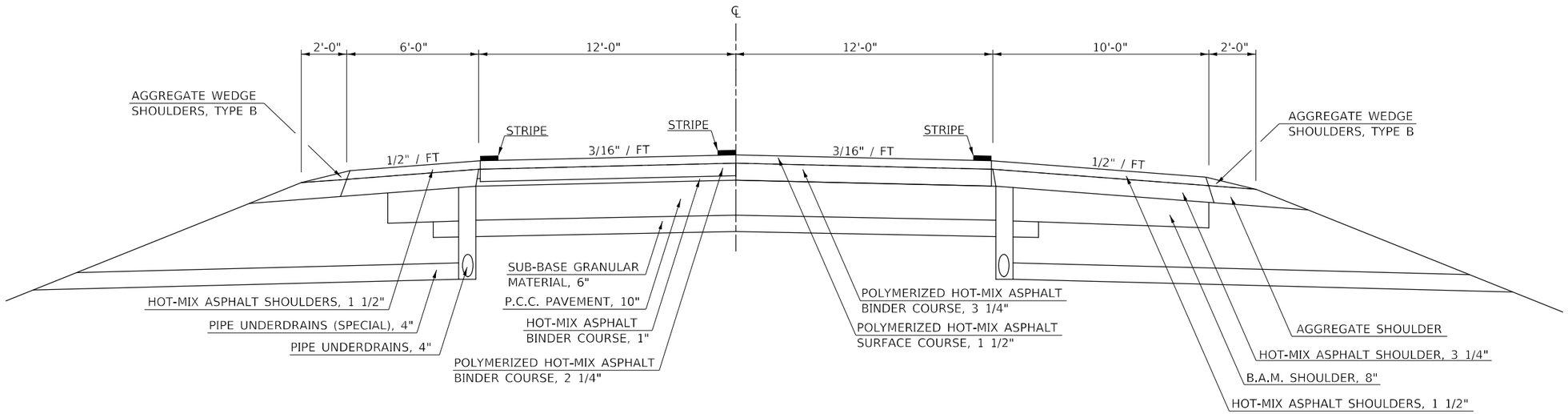

(8) PROPOSED TYPICAL CROSS SECTION

STATION	TO	STATION
(3) 608+50.00		737+50.00 (ROADWAY A; I-74 EB)
(3) 610+90.00		737+50.00 (ROADWAY D; I-74 WB)

STATION EQUATION:
STA. 673+50.00 (BK) =
STA. 670+00.00 (AH)

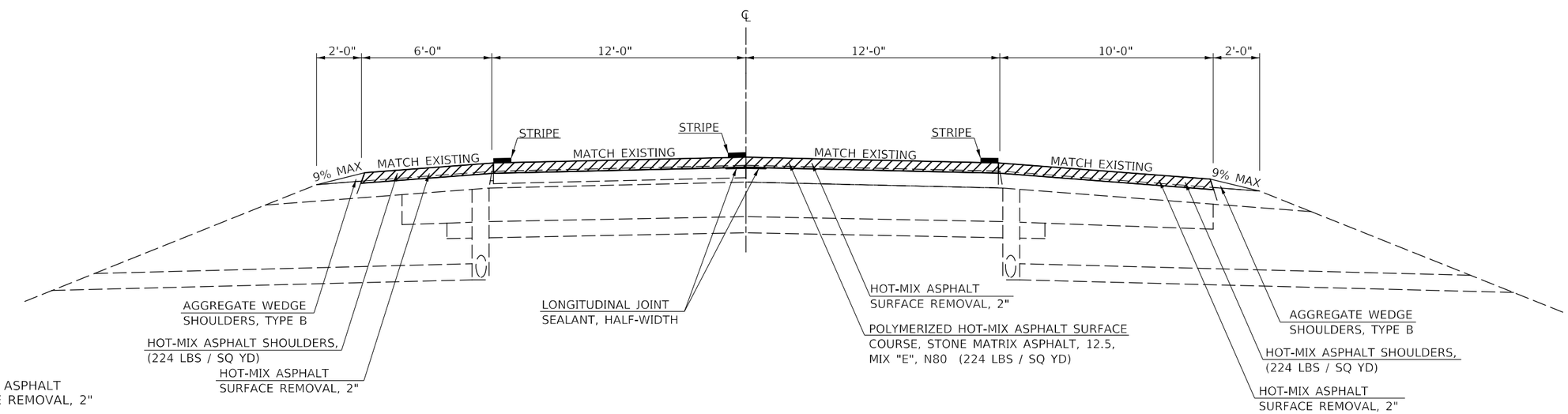

MODEL: $MODEL NAMES
FILE NAME: pw:\\ildot-pw.bentley.com:PWIDOT\Documents\IDOT Offices\District 5\Projects\D570G08\CADData\CADsheets\D570G08-sht-Typical.dgn

USER NAME = Greg.Eaglin	DESIGNED -	REVISED -	
	DRAWN -	REVISED -	
PLOT SCALE = 40.0000 ' / in.	CHECKED -	REVISED -	
PLOT DATE = 1/25/2023	DATE -	REVISED -	

STATE OF ILLINOIS
DEPARTMENT OF TRANSPORTATION

TYPICAL CROSS SECTION

SCALE: | SHEET 8 OF 11 SHEETS | STA. | TO STA.

F.A.I. RTE.	SECTION	COUNTY	TOTAL SHEETS	SHEET NO.
74A	**	MCLEAN	93	18
		CONTRACT NO. 70G08		
	ILLINOIS	FED. AID PROJECT		

** (57-7)RS-3,(57-20)RS-4

(I) EXISTING TYPICAL CROSS SECTION

STATION	TO	STATION	
65+00.00		83+44.00	(ROADWAY K; VETERANS PARKWAY SB)
65+00.00		84+12.00	(ROADWAY L; VETERANS PARKWAY NB)

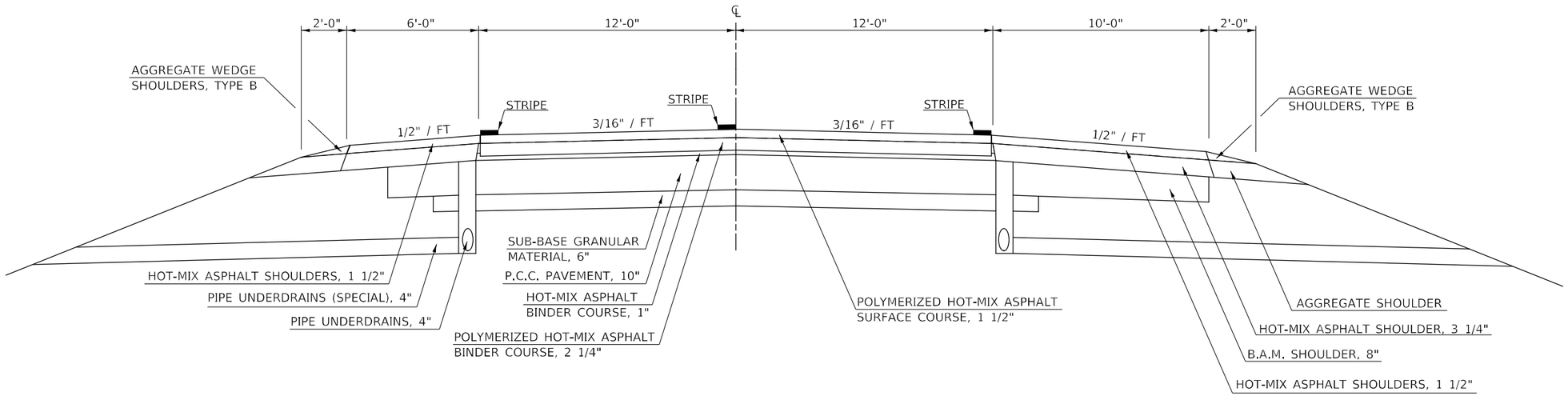

(9) PROPOSED TYPICAL CROSS SECTION

STATION	TO	STATION	
65+00.00		83+44.00	(ROADWAY K; VETERANS PARKWAY SB)
65+00.00		84+12.00	(ROADWAY L; VETERANS PARKWAY NB)

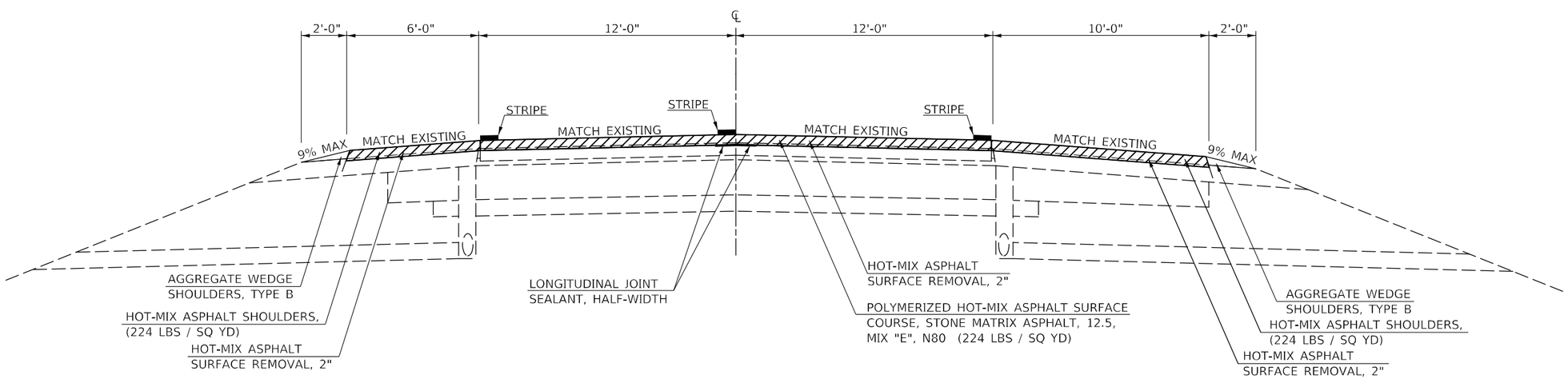

HOT-MIX ASPHALT SURFACE REMOVAL, 2"

MODEL: $MODEL NAMES
FILE NAME: pw:\\ildot-pw.bentley.com:PWIDOT\Documents\IDOT Offices\District 5\Projects\D570G08\CADData\CADsheets\D570G08-sht-Typical.dgn

USER NAME = Greg.Eaglin	DESIGNED -	REVISED -	
	DRAWN -	REVISED -	
PLOT SCALE = 40.0000 ' / in.	CHECKED -	REVISED -	
PLOT DATE = 1/25/2023	DATE -	REVISED -	

STATE OF ILLINOIS
DEPARTMENT OF TRANSPORTATION

TYPICAL CROSS SECTION

SCALE: | SHEET 9 OF 11 SHEETS | STA. TO STA.

F.A.I. RTE.	SECTION	COUNTY	TOTAL SHEETS	SHEET NO.
74A	**	MCLEAN	93	19

CONTRACT NO. 70G08

ILLINOIS | FED. AID PROJECT

** (57-7)RS-3,(57-20)RS-4

(J) EXISTING TYPICAL CROSS SECTION

F.A.I. ROUTE 74 & VETERANS PARKWAY RAMPS

STATION	TO	STATION
26+00.00		37+00.00 (RAMP E)
23+13.00		28+45.00 (RAMP F)
00+00.00		07+05.00 (RAMP J)
37+80.00		57+66.50 (RAMP M)
00+00.00		05+97.40 (RAMP N)
00+00.00		31+99.40 (RAMP O)

* SLOPE VARIES IN SUPERELEVATION AREAS WITH A MAXIMUM OF 0.08 FT / FT DIFFERENCE IN PAVEMENT GRADE AND SHOULDER GRADE.

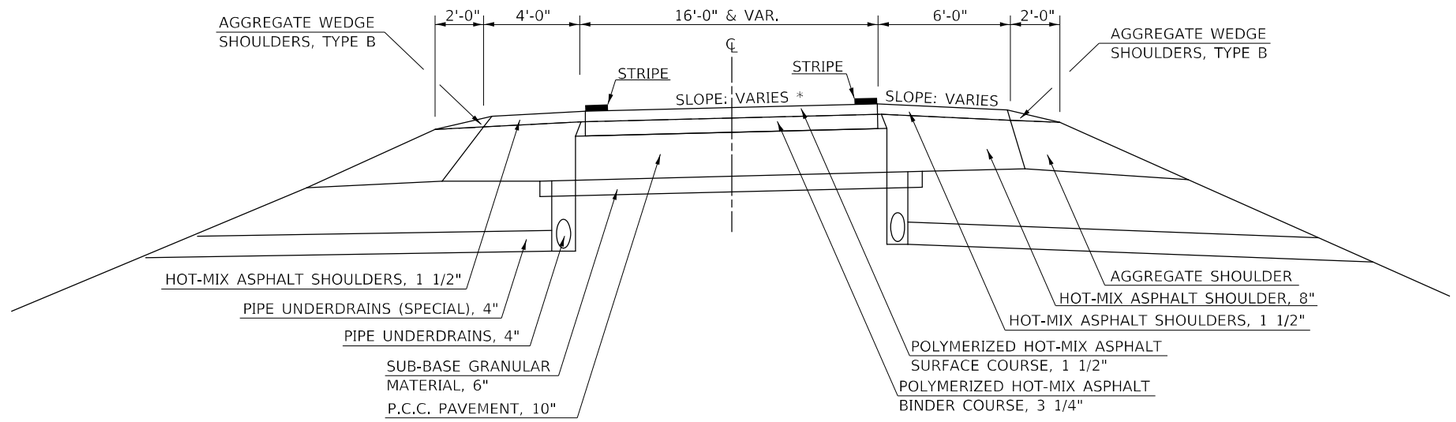

(10) PROPOSED TYPICAL CROSS SECTION

F.A.I. ROUTE 74 & VETERANS PARKWAY RAMPS

STATION	TO	STATION
26+00.00		37+00.00 (RAMP E)
23+13.00		28+45.00 (RAMP F)
00+00.00		07+05.00 (RAMP J)
37+80.00		57+66.50 (RAMP M)
00+00.00		05+97.40 (RAMP N)
00+00.00		31+99.40 (RAMP O)

* SLOPE VARIES IN SUPERELEVATION AREAS WITH A MAXIMUM OF 0.08 FT / FT DIFFERENCE IN PAVEMENT GRADE AND SHOULDER GRADE.

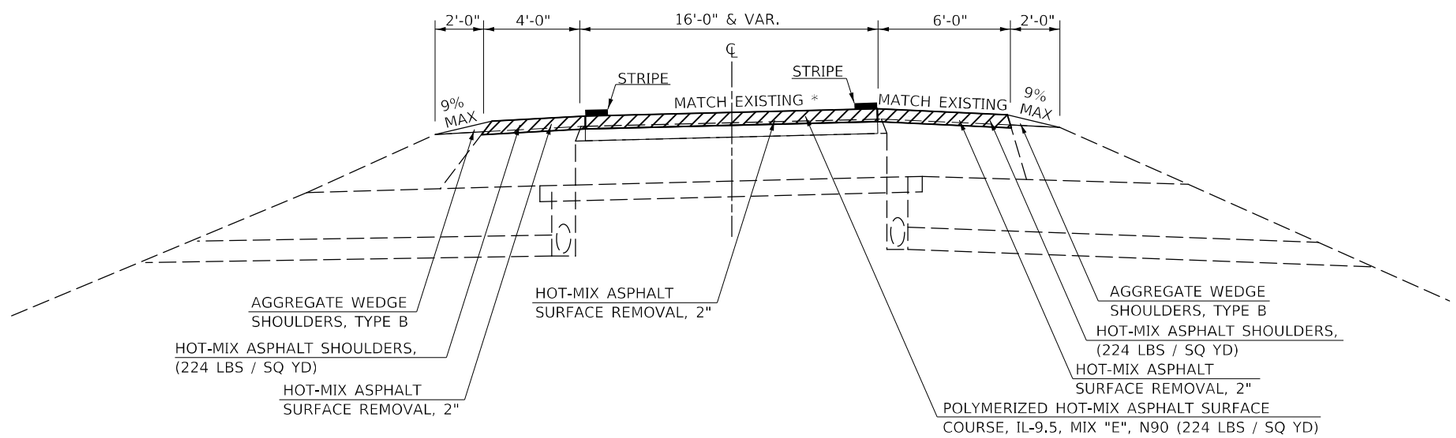

HOT-MIX ASPHALT SURFACE REMOVAL, 2"

MODEL: $MODELNAMES
FILE NAME: pw:\\ildot-pw.bentley.com:PWIDOT\Documents\IDOT Offices\District 5\Projects\D570G08\CADData\CADsheets\D570G08-sht-Typical.dgn

USER NAME = Greg.Eaglin	DESIGNED -	REVISED -	STATE OF ILLINOIS DEPARTMENT OF TRANSPORTATION
	DRAWN -	REVISED -	
PLOT SCALE = 40.0000 ' / in.	CHECKED -	REVISED -	
PLOT DATE = 1/25/2023	DATE -	REVISED -	

TYPICAL CROSS SECTION

SCALE: | SHEET 10 OF 11 SHEETS | STA. | TO STA.

F.A.I. RTE.	SECTION	COUNTY	TOTAL SHEETS	SHEET NO.
74A	**	MCLEAN	93	20
		CONTRACT NO. 70G08		
	ILLINOIS	FED. AID PROJECT		

** (57-7)RS-3,(57-20)RS-4

(K) EXISTING TYPICAL CROSS SECTION

F.A.I. ROUTE 74 & US 51 RAMPS

STATION	TO	STATION
13+18.00		32+67.50 (RAMP A)
44+29.00		62+90.20 (RAMP B)
05+39.00		23+34.20 (RAMP C)
13+40.00		31+86.00 (RAMP D)
03+59.00		21+30.00 (RAMP E)
13+81.75		31+82.00 (RAMP F)

BRIDGE OMISSIONS:
S.N. 057-0047 STA. 718+77.45 TO STA. 720+58.68 (FAI 74 EB ROADWAY A)
S.N. 057-0048 STA. 718+73.80 TO STA. 720+54.90 (FAI 74 WB ROADWAY D)
RAMP A STA. 24+79.00 TO STA. 26+60.30
RAMP D STA. 23+75.00 TO STA. 25+56.30

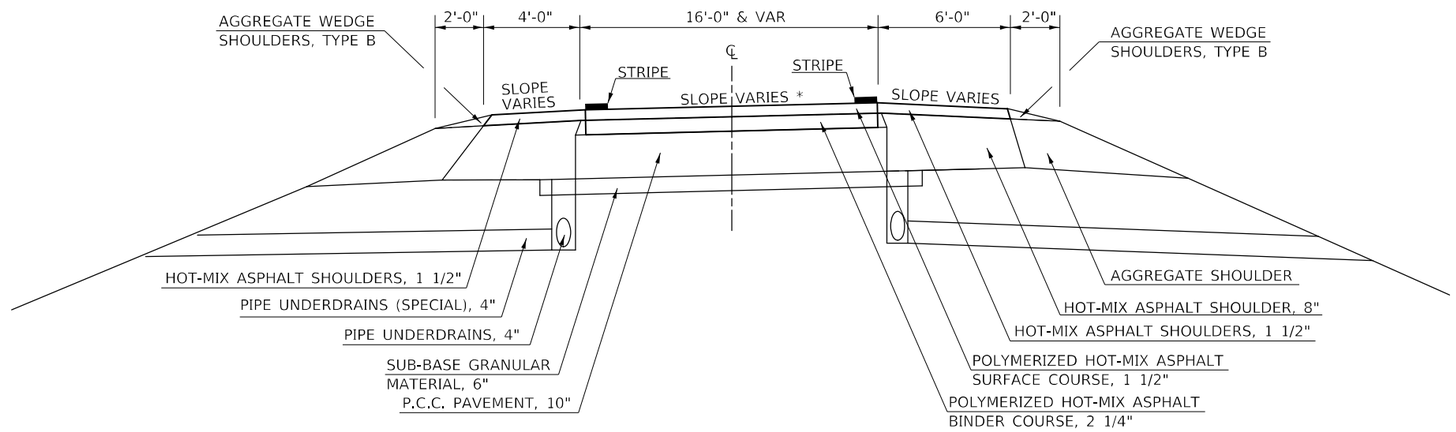

* SLOPE VARIES IN SUPERELEVATION AREAS WITH A MAXIMUM OF 0.08 FT / FT DIFFERENCE IN PAVEMENT GRADE AND SHOULDER GRADE.

(11) PROPOSED TYPICAL CROSS SECTION

F.A.I. ROUTE 74 & US 51 RAMPS

STATION	TO	STATION
13+18.00		32+67.50 (RAMP A)
44+29.00		62+90.20 (RAMP B)
05+39.00		23+34.20 (RAMP C)
13+40.00		31+86.00 (RAMP D)
03+59.00		21+30.00 (RAMP E)
13+81.75		31+82.00 (RAMP F)

BRIDGE OMISSIONS:
S.N. 057-0047 STA. 718+77.45 TO STA. 720+58.68 (FAI 74 EB ROADWAY A)
S.N. 057-0048 STA. 718+73.80 TO STA. 720+54.90 (FAI 74 WB ROADWAY D)
RAMP A STA. 24+79.00 TO STA. 26+60.30
RAMP D STA. 23+75.00 TO STA. 25+56.30

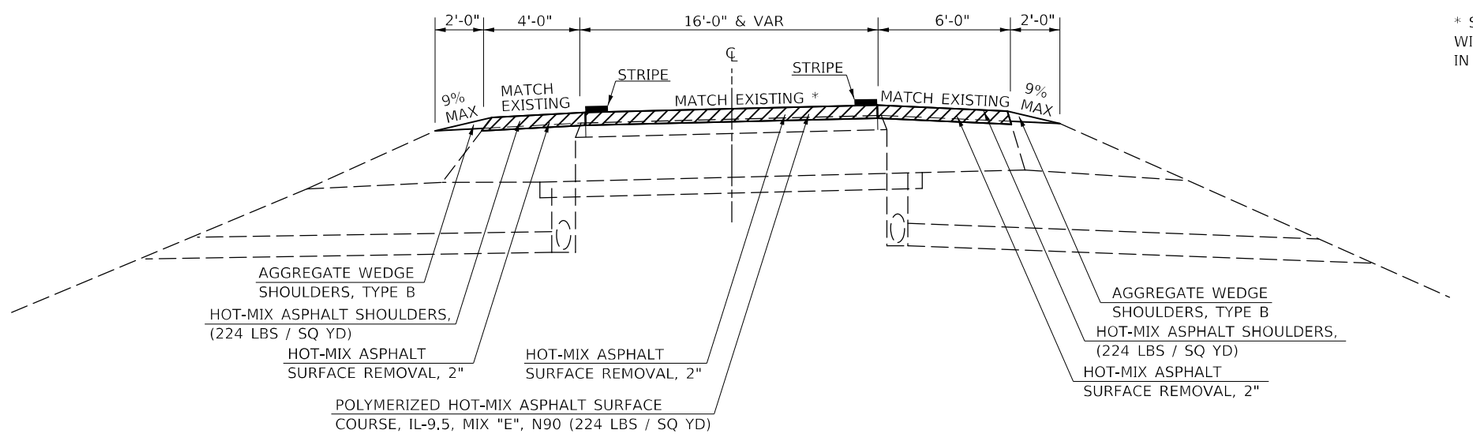

* SLOPE VARIES IN SUPERELEVATION AREAS WITH A MAXIMUM OF 0.08 FT / FT DIFFERENCE IN PAVEMENT GRADE AND SHOULDER GRADE.

HOT-MIX ASPHALT SURFACE REMOVAL, 2"

MODEL: $MODEL NAMES
FILE NAME: pw:\\ildot-pw.bentley.com:PWIDOT\Documents\IDOT Offices\District 5\Projects\D570G08\CADData\CADsheets\D570G08-sht-Typical.dgn

USER NAME = Greg.Eaglin	DESIGNED -	REVISED -	
	DRAWN -	REVISED -	
PLOT SCALE = 40.0000 ' / in.	CHECKED -	REVISED -	
PLOT DATE = 1/25/2023	DATE -	REVISED -	

STATE OF ILLINOIS
DEPARTMENT OF TRANSPORTATION

TYPICAL CROSS SECTION

SCALE: | SHEET 11 OF 11 SHEETS | STA. TO STA.

F.A.I. RTE.	SECTION	COUNTY	TOTAL SHEETS	SHEET NO.
74A	**	MCLEAN	93	21
		CONTRACT NO. 70G08		
	ILLINOIS	FED. AID PROJECT		

** (57-7)RS-3,(57-20)RS-4

SCHEDULE OF QUANTITIES

X0328005 REAL-TIME TRAFFIC CONTROL MONITORING SENSOR UNIT

X0328006 REAL-TIME TRAFFIC CONTROL WARNING SIGN

X0327640 REAL-TIME TRAFFIC CONTROL CENTRAL BASE UNIT

LOCATION		NUMBER OF MONTHS (EACH)	REAL-TIME TRAFFIC CONTROL MONITORING SENSOR UNIT (EACH)	X0328005 REAL-TIME TRAFFIC CONTROL MONITORING SENSOR UNIT (CAL MO)	REAL-TIME TRAFFIC CONTROL WARNING SIGN (EACH)	X0328006 REAL-TIME TRAFFIC CONTROL WARNING SIGN (CAL MO)	REAL-TIME TRAFFIC CONTROL CENTRAL BASE UNIT (EACH)	X0327640 REAL-TIME TRAFFIC CONTROL CENTRAL BASE UNIT (CAL MO)
I-55, I-74	SOUTHBOUND, EASTBOUND	5.0	8.0	40.0	4.0	20.0	1.0	5.0
I-55	NORTHBOUND	5.0	8.0	40.0	4.0	20.0		
I-74	WESTBOUND	5.0	8.0	40.0	4.0	20.0		
		TOTAL =		120.0		60.0		5.0
				CAL MO		CAL MO		CAL MO

NOTE:
SEE REAL-TIME TRAFFIC CONTROL SYSTEM DETAIL FOR LAYOUT OF TRAFFIC CONTROL SIGNS AND MONITORING SENSOR UNITS.

70107025 CHANGEABLE MESSAGE SIGN

LOCATION		PUBLIC NOTIFICATION (**) (CAL DA)	CMS USED DURING CONSTRUCTION (CAL DA)	TOTAL QUANTITY (CAL DA)
I-74, I-55	EASTBOUND, SOUTHBOUND	7.0		7.0
I-55	NORTHBOUND	7.0		7.0
I-74	WESTBOUND	7.0		7.0
I-74, I-55	EASTBOUND, SOUTHBOUND		30.0	30.0
I-55	NORTHBOUND		30.0	30.0
RAMP A	US 51 NB TO I-74 WB	3.0	2.0	5.0
RAMP B	I-74 WB TO US 51	3.0	2.0	5.0
RAMP C	US 51 NB TO I-74 EB	3.0	2.0	5.0
RAMP D	US 51 SB TO I-74 EB	3.0	2.0	5.0
RAMP E	I-74 EB TO US 51	3.0	2.0	5.0
RAMP F	US 51 SB TO I-74 WB	3.0	2.0	5.0
RAMP N	I-74 WB TO VETS PKWY NB	3.0	2.0	5.0
RAMP E	I-74 WB TO VETS PKWY SB	3.0	2.0	5.0
RAMP M	VETS PKWY SB TO I-74 WB	3.0	2.0	5.0
RAMP F	VETS PKWY SB TO I-74 EB	3.0	2.0	5.0
RAMP J	I-74 EB TO VETS PKWY NB	3.0	2.0	5.0
RAMP O	VETS PKWY NB TO I-74 EB	3.0	2.0	5.0
			TOTAL =	141.0
				CAL DA

** NOTE:
SEE SPECIAL PROVISIONS FOR PUBLIC NOTIFICATION REQUIREMENTS.

70100420 TRAFFIC CONTROL AND PROTECTION, STD. 701411

LOCATION / DESCRIPTION	QUANTITY (EACH)
WESTBOUND DIRECTION	
I-74 W.B. OFF-RAMP B TO US 51	1.0
US 51 N.B. RAMP A TO I-74 W.B.	1.0
US 51 S.B. RAMP F TO I-74 W.B.	1.0
I-74 W.B. OFF-RAMP N TO VETERANS PARKWAY N.B.	1.0
I-74 W.B. OFF-RAMP E TO VETERANS PARKWAY S.B.	1.0
VETERANS PARKWAY S.B. RAMP M TO I-74 W.B.	1.0
EASTBOUND DIRECTION	
VETERANS PARKWAY S.B. RAMP F TO I-74 E.B.	1.0
I-74 E.B. TO VETERANS PARKWAY N.B. RAMP J	1.0
VETERANS PARKWAY N.B. RAMP O TO I-74 E.B.	1.0
I-74 E.B TO US 51 RAMP E	1.0
US 51 S.B. RAMP D TO I-74 E.B.	1.0
US 51 N.B. RAMP C TO I-74 E.B.	1.0
VETERANS PARKWAY N.B TO RAMP O	1.0
SOUTHBOUND DIRECTION	
I-55 S.B. & I-74 E.B. SPLIT	1.0
TOTAL =	14.0
	EACH

X2700001 TEMPORARY RUMBLE STRIPS (SPECIAL)

LOCATION		X2700001 TEMPORARY RUMBLE STRIPS (SPECIAL) QUANTITY (EACH)
I-74, I-55	EASTBOUND, SOUTHBOUND	12.0
I-74	WESTBOUND	8.0
I-55	NORTHBOUND	8.0
	TOTAL =	28.0
		EACH

MODEL: SMODELNAMES
FILE NAME: pw:\\ildot-pw.bentley.com:PWIDOT\Documents\IDOT Offices\District 5\Projects\D570G08\CADData\CADSheets\D570G08-sht-Sched.dgn

USER NAME = Greg.Eaglin	DESIGNED -	REVISED -	
	DRAWN -	REVISED -	
PLOT SCALE = 40.0000 ' / in.	CHECKED -	REVISED -	
PLOT DATE = 1/25/2023	DATE -	REVISED -	

STATE OF ILLINOIS
DEPARTMENT OF TRANSPORTATION

SCHEDULE OF QUANTITIES

SCALE: | SHEET 1 OF 17 SHEETS | STA. TO STA.

F.A.I. RTE.	SECTION	COUNTY	TOTAL SHEETS	SHEET NO.
74A	**	MCLEAN	93	22

CONTRACT NO. 70G08
ILLINOIS | FED. AID PROJECT

** (57-7)RS-3,(57-20)RS-4

SCHEDULE OF QUANTITIES

CLASS B PATCHING SCHEDULE

	LOCATION / DESCRIPTION	STATION	LENGTH (FT)	WIDTH (FT)	44201031 TYPE II, 15" (SQ YD)	44201035 TYPE III, 15" (SQ YD)	44201037 TYPE IV 15" (SQ YD)	44201299 DOWEL BARS 1 1/2" (EACH)	44213200 SAW CUTS (FT)	44213204 TIE BARS 3/4" (EACH)	44200050 WELDED WIRE REINFORCEMENT (SQ YD)
S.B.	ROADWAY G (I-55) SBPL	640+80.00	6.0	12.0	8.00			20.00	48.00		
N.B.	ROADWAY H (I-55) NBPL	656+42.00	20.0	12.0			26.67	30.00	76.00	7.00	26.67
N.B.	ROADWAY H (I-55) NBDL	658+22.00	6.0	12.0	8.00			20.00	48.00		
W.B.	ROADWAY D (I-74) WBDL	637+80.00	6.0	12.0	8.00			20.00	48.00		
W.B.	ROADWAY D (I-74) WBDL	635+34.00	70.0	12.0			93.33	60.00	176.00	23.00	93.33
W.B.	ROADWAY D (I-74) WBDL	718+24.00	6.0	12.0	8.00			20.00	48.00		
W.B.	ROADWAY D (I-74) WBPL	718+24.00	14.0	12.0		18.67		20.00	64.00		18.67
N.B.	ROADWAY L (VETS PKWY) NBDL	69+00.00	6.0	12.0	8.00			20.00	48.00		
N.B.	RAMP O (VETS PKWY)	8+00.00	6.0	16.0	10.67			28.00	60.00		
N.B.	RAMP O (VETS PKWY)	22+50.00	6.0	16.0	10.67			28.00	60.00		
N.B.	RAMP O (VETS PKWY)	27+00.00	6.0	16.0	10.67			28.00	60.00		
S.B.	RAMP F (SB 51 TO WB I-74)	15+30.00	6.0	16.0	10.67			28.00	60.00		
S.B.	RAMP F (SB 51 TO WB I-74)	26+00.00	6.0	16.0	10.67			28.00	60.00		
W.B.	RAMP E (WB I-74 SB VETS PKWY)	35+00.00	6.0	16.0	10.67			28.00	60.00		
	MISC (TO BE DETERMINED)		6.0	12.0	8.00			20.00	48.00		
	MISC (TO BE DETERMINED)		6.0	12.0	8.00			20.00	48.00		
	MISC (TO BE DETERMINED)		6.0	12.0	8.00			20.00	48.00		
	MISC (TO BE DETERMINED)		16.0	12.0		21.33		30.00	68.00		21.33
				TOTAL =	128.00	40.00	120.00	468.00	1,128.00	30.00	160.00
				USE =	128.00	40.00	120.00	468.00	1,128.00	30.00	160.00
					SQ YD	SQ YD	SQ YD	EACH	FT	EACH	SQ YD

NOTE:
FIELD INSPECTION HAS DETERMINED THAT THE QUANTITY OF CLASS B PATCHES SHOWN IN THE SCHEDULE MAY BE NEEDED FOR THIS CONTRACT.

Z0001800 APPROACH SLAB REPAIR (PARTIAL DEPTH)

	LOCATION / DESCRIPTION	STATION	LENGTH (FT)	WIDTH (FT)	Z0001800 APPROACH SLAB REPAIR (PARTIAL DEPTH) (SQ YD)
E.B.	ROADWAY A (I-74) EBDL	718+77.00	40.0	12.0	53.33
E.B.	ROADWAY A (I-74) EBDL	720+59.00	30.0	12.0	40.00
W.B.	ROADWAY D (I-74 WBPL)	718+73.00	40.0	12.0	53.33
W.B.	ROADWAY D (I-74 WBPL)	720+55.00	40.0	12.0	53.33
W.B.	RAMP A (US 51 NB TO I-74 WB)	024+79.00	30.0	16.0	53.33
				TOTAL =	253.33
				USE =	254.00
					SQ YD

NOTE:
FIELD INSPECTION HAS DETERMINED THAT THE QUANTITY OF APPROACH SLAB REPAIRS (PARTIAL DEPTH) SHOWN IN THE SCHEDULE MAY BE NEEDED FOR THIS CONTRACT.

SCHEDULE OF QUANTITIES

HOT-MIX ASPHALT SCHEDULE

LOCATION			STATION	TO	STATION	LENGTH (FT)	AVERAGE WIDTH (FT)	AREA (SQ YD)	HMA SURFACE THICKNESS (INCHES)	44000157 HOT-MIX ASPHALT SURFACE REMOVAL, 2" (SQ YD)	40600290 BITUMINOUS MATERIAL TACK COAT (POUND)	40604174 POLYMERIZED HOT-MIX ASPHALT SURFACE COURSE IL 9.5 MIX "E", N90 (TON)	40605034 POLYMERIZED HOT-MIX ASPHALT SURFACE COURSE, STONE MATRIX ASPHALT 12.5, MIX "E", N80 (TON)	48203100 HOT-MIX ASPHALT SHOULDERS (TON)	Z0034105 MATERIAL TRANSFER DEVICE (TON)
E.B.	DL	ROADWAY A (I-74)	602+95.00		673+50.00 (BK)	7,055.00	12.00	9,406.67	2.0	9,406.67	4,233.00		1,053.55		1,053.55
E.B.	DL	ROADWAY A (I-74)	670+00.00 (AH)		718+77.45	4,877.45	12.00	6,503.27	2.0	6,503.27	2,926.47		728.37		728.37
E.B.	DL	ROADWAY A (I-74)	720+58.68		737+50.00	1,691.32	12.00	2,255.09	2.0	2,255.09	1,014.79		252.57		252.57
E.B.	DL SHOULDER	ROADWAY A (I-74)	608+17.00		635+95.00	2,778.00	10.00	3,086.67	2.0	3,086.67	1,389.00			345.71	
E.B.	DL SHOULDER	ROADWAY A (I-74)	642+85.00		649+44.00	659.00	10.00	732.22	2.0	732.22	329.50			82.01	
E.B.	DL SHOULDER	ROADWAY A (I-74)	658+18.50		673+50.00 (BK)	1,531.50	10.00	1,701.67	2.0	1,701.67	765.75			190.59	
E.B.	DL SHOULDER	ROADWAY A (I-74)	670+00.00 (AH)		703+61.50	3,361.50	10.00	3,735.00	2.0	3,735.00	1,680.75			418.32	
E.B.	DL SHOULDER	ROADWAY A (I-74)	709+71.50		716+92.50	721.00	10.00	801.11	2.0	801.11	360.50			89.72	
E.B.	DL SHOULDER	ROADWAY A (I-74)	726+90.00		726+98.00	8.00	10.00	8.89	2.0	8.89	4.00			1.00	
E.B.	DL SHOULDER	ROADWAY A (I-74)	736+44.50		737+50.00	105.50	10.00	117.22	2.0	117.22	52.75			13.13	
E.B.	PL	ROADWAY A (I-74)	602+95.00		673+50.00 (BK)	7,055.00	12.00	9,406.67	2.0	9,406.67	4,233.00		1,053.55		1,053.55
E.B.	PL	ROADWAY A (I-74)	670+00.00 (AH)		718+77.45	4,877.45	12.00	6,503.27	2.0	6,503.27	2,926.47		728.37		728.37
E.B.	PL	ROADWAY A (I-74)	720+58.68		737+50.00	1,691.32	12.00	2,255.09	2.0	2,255.09	1,014.79		252.57		252.57
E.B.	PL SHOULDER	ROADWAY A (I-74)	602+95.00		673+50.00 (BK)	7,055.00	6.00	4,703.33	2.0	4,703.33	2,116.50			526.77	
E.B.	PL SHOULDER	ROADWAY A (I-74)	670+00.00 (AH)		718+65.50	4,865.50	6.00	3,243.67	2.0	3,243.67	1,459.65			363.29	
E.B.	PL SHOULDER	ROADWAY A (I-74)	720+58.68		737+50.00	1,691.32	6.00	1,127.55	2.0	1,127.55	507.40			126.29	
W.B.	DL	ROADWAY D (I-74)	737+50.00		720+54.90	1,695.10	12.00	2,260.13	2.0	2,260.13	1,017.06		253.13		253.13
W.B.	DL	ROADWAY D (I-74)	718+73.80		670+00.00	4,873.80	12.00	6,498.40	2.0	6,498.40	2,924.28		727.82		727.82
W.B.	DL	ROADWAY D (I-74)	670+00.00		606+84.00	6,316.00	12.00	8,421.33	2.0	8,421.33	3,789.60		943.19		943.19
W.B.	DL SHOULDER	ROADWAY D (I-74)	737+50.00		737+23.00	27.00	10.00	30.00	2.0	30.00	13.50			3.36	
W.B.	DL SHOULDER	ROADWAY D (I-74)	729+67.50		722+36.50	731.00	10.00	812.22	2.0	812.22	365.50			90.97	
W.B.	DL SHOULDER	ROADWAY D (I-74)	712+66.50		712+28.50	38.00	10.00	42.22	2.0	42.22	19.00			4.73	
W.B.	DL SHOULDER	ROADWAY D (I-74)	702+84.00		670+00.00	3,284.00	10.00	3,648.89	2.0	3,648.89	1,642.00			408.68	
W.B.	DL SHOULDER	ROADWAY D (I-74)	670+00.00		652+00.00	1,800.00	10.00	2,000.00	2.0	2,000.00	900.00			224.00	
W.B.	DL SHOULDER	ROADWAY D (I-74)	645+16.00		637+00.00	816.00	10.00	906.67	2.0	906.67	408.00			101.55	
W.B.	DL SHOULDER	ROADWAY D (I-74)	630+50.00		623+03.50	746.50	10.00	829.44	2.0	829.44	373.25			92.90	
W.B.	DL SHOULDER	ROADWAY D (I-74)	614+00.00		606+84.00	716.00	10.00	795.56	2.0	795.56	358.00			89.10	
W.B.	PL	ROADWAY D (I-74)	737+50.00		720+54.90	1,695.10	12.00	2,260.13	2.0	2,260.13	1,017.06		253.13		253.13
W.B.	PL	ROADWAY D (I-74)	718+73.80		670+00.00	4,873.80	12.00	6,498.40	2.0	6,498.40	2,924.28		727.82		727.82
W.B.	PL	ROADWAY D (I-74)	670+00.00		606+84.00	6,316.00	12.00	8,421.33	2.0	8,421.33	3,789.60		943.19		943.19
W.B.	PL SHOULDER	ROADWAY D (I-74)	737+50.00		720+54.90	1,695.10	6.00	1,130.07	2.0	1,130.07	508.53			126.57	
W.B.	PL SHOULDER	ROADWAY D (I-74)	718+73.80		670+00.00	4,873.80	6.00	3,249.20	2.0	3,249.20	1,462.14			363.91	
W.B.	PL SHOULDER	ROADWAY D (I-74)	670+00.00		610+96.00	5,904.00	6.00	3,936.00	2.0	3,936.00	1,771.20			440.83	
S.B.	DL	ROADWAY G (I-55)	602+95.00		641+74.41 (BK)	3,879.41	12.00	5,172.55	2.0	5,172.55	2,327.65		579.33		579.33
S.B.	DL	ROADWAY G (I-55)	659+74.19 (AH)		659+48.60	25.59	12.00	34.12	2.0	34.12	15.35		3.82		3.82
S.B.	DL SHOULDER	ROADWAY G (I-55)	602+95.00		641+74.41 (BK)	3,879.41	10.00	4,310.46	2.0	4,310.46	1,939.71			482.77	
S.B.	DL SHOULDER	ROADWAY G (I-55)	659+74.19 (AH)		659+48.60	25.59	10.00	28.43	2.0	28.43	12.79			3.18	
S.B.	PL	ROADWAY G (I-55)	602+95.00		641+74.41 (BK)	3,879.41	12.00	5,172.55	2.0	5,172.55	2,327.65		579.33		579.33
S.B.	PL	ROADWAY G (I-55)	659+74.19 (AH)		659+48.60	25.59	12.00	34.12	2.0	34.12	15.35		3.82		3.82
S.B.	PL SHOULDER	ROADWAY G (I-55)	608+15.00		641+74.41 (BK)	3,359.41	4.00	1,493.07	2.0	1,493.07	671.88			167.22	
S.B.	PL SHOULDER	ROADWAY G (I-55)	659+74.19 (AH)		659+48.60	25.59	4.00	11.37	2.0	11.37	5.12			1.27	
N.B.	DL	ROADWAY H (I-55)	658+22.00		649+10.00	912.00	12.00	1,216.00	2.0	1,216.00	547.20		136.19		136.19
N.B.	DL	ROADWAY H (I-55)	618+35.00		606+84.00	1,151.00	12.00	1,534.67	2.0	1,534.67	690.60		171.88		171.88
N.B.	DL SHOULDER	ROADWAY H (I-55)	656+04.50		649+10.00	694.50	10.00	771.67	2.0	771.67	347.25			86.43	
N.B.	DL SHOULDER	ROADWAY H (I-55)	618+35.00		610+95.00	740.00	10.00	822.22	2.0	822.22	370.00			92.09	
									SUB-TOTAL 1 =	127,928.60	57,567.87	0.00	9,391.62	4,936.38	9,391.62
										SQ YD	POUND	TON	TON	TON	TON

(CONTINUED ON NEXT SHEET)

SCHEDULE OF QUANTITIES

HOT-MIX ASPHALT SCHEDULE

LOCATION			STATION	TO	STATION	LENGTH (FT)	AVERAGE WIDTH (FT)	AREA (SQ YD)	HMA SURFACE THICKNESS (INCHES)	44000157 HOT-MIX ASPHALT SURFACE REMOVAL, 2" (SQ YD)	40600290 BITUMINOUS MATERIAL TACK COAT (POUND)	40604174 POLYMERIZED HOT-MIX ASPHALT SURFACE COURSE IL 9.5 MIX "E", N90 (TON)	40605034 POLYMERIZED HOT-MIX ASPHALT SURFACE COURSE, STONE MATRIX ASPHALT 12.5, MIX "E", N80 (TON)	48203100 HOT-MIX ASPHALT SHOULDERS (TON)	Z0034105 MATERIAL TRANSFER DEVICE (TON)
N.B.	PL	ROADWAY H (I-55)	658+22.00		649+10.00	912.00	12.00	1,216.00	2.0	1,216.00	547.20		136.19		136.19
N.B.	PL	ROADWAY H (I-55)	618+35.00		606+84.00	1,151.00	12.00	1,534.67	2.0	1,534.67	690.60		171.88		171.88
N.B.	PL SHOULDER	ROADWAY H (I-55)	658+22.00		649+10.00	912.00	4.00	405.33	2.0	405.33	182.40			45.40	
N.B.	PL SHOULDER	ROADWAY H (I-55)	618+35.00		606+84.00	1,151.00	4.00	511.56	2.0	511.56	230.20			57.29	
N.B.	DL	ROADWAY L (VETS PKWY)	84+12.00		65+00.00	1,912.00	12.00	2,549.33	2.0	2,549.33	1,147.20		285.53		285.53
N.B.	DL SHOULDER	ROADWAY L (VETS PKWY)	84+12.00		76+50.00	762.00	10.00	846.67	2.0	846.67	381.00			94.83	
N.B.	DL SHOULDER	ROADWAY L (VETS PKWY)	69+94.00		65+00.00	494.00	10.00	548.89	2.0	548.89	247.00			61.48	
N.B.	PL	ROADWAY L (VETS PKWY)	84+12.00		65+00.00	1,912.00	12.00	2,549.33	2.0	2,549.33	1,147.20		285.53		285.53
N.B.	PL SHOULDER	ROADWAY L (VETS PKWY)	81+94.50		65+00.00	1,694.50	6.00	1,129.67	2.0	1,129.67	508.35			126.52	
S.B.	DL	ROADWAY K (VETS PKWY)	65+00.00		83+44.00	1,844.00	12.00	2,458.67	2.0	2,458.67	1,106.40		275.37		275.37
S.B.	DL SHOULDER	ROADWAY K (VETS PKWY)	65+00.00		83+44.00	1,844.00	10.00	2,048.89	2.0	2,048.89	922.00			229.48	
S.B.	PL	ROADWAY K (VETS PKWY)	65+00.00		83+44.00	1,844.00	12.00	2,458.67	2.0	2,458.67	1,106.40		275.37		275.37
S.B.	PL SHOULDER	ROADWAY K (VETS PKWY)	65+00.00		83+44.00	1,844.00	6.00	1,229.33	2.0	1,229.33	553.20			137.69	
	DL	RAMP A (US 51)	13+18.00		24+79.00	1,161.00	16.00	2,064.00	2.0	2,064.00	928.80	231.17			
	DL	RAMP A (US 51)	26+60.40		32+67.50	607.10	8.57	578.09	2.0	578.09	260.14	64.75			
	RT SHOULDER	RAMP A (US 51)	13+18.00		24+79.00	1,161.00	6.00	774.00	2.0	774.00	348.30			86.69	
	RT SHOULDER	RAMP A (US 51)	26+60.40		32+67.50	607.10	6.00	404.73	2.0	404.73	182.13			45.33	
	LT SHOULDER	RAMP A (US 51)	14+57.00		23+02.00	845.00	4.00	375.56	2.0	375.56	169.00			42.06	
	DL	RAMP B (US 51)	62+90.20		57+38.10	552.10	6.75	414.08	2.0	414.08	186.33	46.38			
	DL	RAMP B (US 51)	57+38.10		44+29.00	1,309.10	16.00	2,327.29	2.0	2,327.29	1,047.28	260.66			
	DL	RAMP B (US 51)	45+00.00		44+29.00	71.00	6.67	52.62	2.0	52.62	23.68	5.89			
	RT SHOULDER	RAMP B (US 51)	62+90.20		44+40.00	1,850.20	6.00	1,233.47	2.0	1,233.47	555.06			138.15	
	LT SHOULDER	RAMP B (US 51)	55+05.50		44+29.00	1,076.50	4.00	478.44	2.0	478.44	215.30			53.59	
	DL	RAMP C (US 51)	5+39.00		16+70.50	1,131.50	16.00	2,011.56	2.0	2,011.56	905.20	225.29			
	DL	RAMP C (US 51)	16+70.50		23+34.00	663.50	9.78	721.00	2.0	721.00	324.45	80.75			
	RT SHOULDER	RAMP C (US 51)	5+39.00		23+34.00	1,795.00	6.00	1,196.67	2.0	1,196.67	538.50			134.03	
	LT SHOULDER	RAMP C (US 51)	5+39.00		13+96.00	857.00	4.00	380.89	2.0	380.89	171.40			42.66	
	DL	RAMP D (US 51)	13+40.00		23+75.00	1,035.00	16.00	1,840.00	2.0	1,840.00	828.00	206.08			
	DL	RAMP D (US 51)	25+56.30		31+86.00	629.70	7.81	546.44	2.0	546.44	245.90	61.20			
	RT SHOULDER	RAMP D (US 51)	13+40.00		23+66.50	1,026.50	6.00	684.33	2.0	684.33	307.95			76.65	
	RT SHOULDER	RAMP D (US 51)	25+67.00		31+86.00	619.00	6.00	412.67	2.0	412.67	185.70			46.22	
	LT SHOULDER	RAMP D (US 51)	13+40.00		21+94.50	854.50	4.00	379.78	2.0	379.78	170.90			42.54	
	DL	RAMP E (US 51)	3+59.00		6+81.20	322.20	8.68	310.74	2.0	310.74	139.83	34.80			
	DL	RAMP E (US 51)	6+81.20		21+30.00	1,448.80	16.00	2,575.64	2.0	2,575.64	1,159.04	288.47			
	DL	RAMP E (US 51 SPUR) 130' S OF EOP					16.00	317.86	2.0	317.86	143.04	35.60			
	RT SHOULDER	RAMP E (US 51)	3+59.00		19+64.00	1,605.00	6.00	1,070.00	2.0	1,070.00	481.50			119.84	
	RT SHOULDER	RAMP E (US 51 SPUR) 130' S OF EOP					6.00	148.67	2.0	0.00	66.90			16.65	
	LT SHOULDER	RAMP E (US 51)	9+66.50		21+30.00	1,163.50	4.00	517.11	2.0	517.11	232.70			57.92	
	DL	RAMP F (US 51)	13+81.75		24+62.00	1,080.25	16.00	1,920.44	2.0	1,920.44	864.20	215.09			
	DL	RAMP F (US 51)	24+62.00		31+82.00	720.00	8.54	683.20	2.0	683.20	307.44	76.52			
	RT SHOULDER	RAMP F (US 51)	13+81.75		31+82.00	1,800.25	6.00	1,200.17	2.0	1,200.17	540.08			134.42	
	LT SHOULDER	RAMP F (US 51)	13+81.75		22+40.00	858.25	4.00	381.44	2.0	381.44	171.65			42.72	
	DL	RAMP N (VETS PKWY NB I-74 WB)	0+00.00		4+71.50	471.50	4.13	216.37	2.0	216.37	97.36	24.23			
	DL	RAMP N (VETS PKWY NB I-74 WB)	4+71.50		5+97.40	125.90	16.00	223.82	2.0	223.82	100.72	25.07			
	RT SHOULDER	RAMP N (VETS PKWY NB I-74 WB)	0+00.00		5+97.40	597.40	10.00	663.78	2.0	663.78	298.70			74.34	
									SUB-TOTAL 2 =	46,443.19	20,966.33	1,881.95	1,429.87	1,906.47	1,429.87
										SQ YD	POUND	TON	TON	TON	TON

(CONTINUED ON NEXT SHEET)

SCHEDULE OF QUANTITIES

HOT-MIX ASPHALT SCHEDULE

LOCATION		STATION	TO	STATION	LENGTH (FT)	AVERAGE WIDTH (FT)	AREA (SQ YD)	HMA SURFACE THICKNESS (INCHES)	44000157 HOT-MIX ASPHALT SURFACE REMOVAL, 2" (SQ YD)	40600290 BITUMINOUS MATERIAL TACK COAT (POUND)	40604174 POLYMERIZED HOT-MIX ASPHALT SURFACE COURSE IL 9.5 MIX "E", N90 (TON)	40605034 POLYMERIZED HOT-MIX ASPHALT SURFACE COURSE, STONE MATRIX ASPHALT 12.5, MIX "E", N80 (TON)	48203100 HOT-MIX ASPHALT SHOULDERS (TON)	Z0034105 MATERIAL TRANSFER DEVICE (TON)
DL	RAMP E (VETS PKWY SB I-74 WB)	37+00.00		32+65.00	435.00	5.13	247.95	2.0	247.95	111.58	27.77			
DL	RAMP E (VETS PKWY SB I-74 WB)	32+65.00		26+00.00	665.00	16.00	1,182.22	2.0	1,182.22	532.00	132.41			
RT SHOULDER	RAMP E (VETS PKWY SB I-74 WB)	37+00.00		26+00.00	1,100.00	6.00	733.33	2.0	733.33	330.00			82.13	
LT SHOULDER	RAMP E (VETS PKWY SB I-74 WB)	30+54.00		26+00.00	454.00	4.00	201.78	2.0	201.78	90.80			22.60	
DL	RAMP M (VETS PKWY SB I-74 WB)	37+80.00		52+30.00	1,450.00	16.00	2,577.78	2.0	2,577.78	1,160.00	288.71			
DL	RAMP M (VETS PKWY SB I-74 WB	52+30.00		57+66.50	536.50	11.46	683.14	2.0	683.14	307.41	76.51			
RT SHOULDER	RAMP M (VETS PKWY SB I-74 WB	37+80.00		57+66.50	1,986.50	6.00	1,324.33	2.0	1,324.33	595.95			148.33	
LT SHOULDER	RAMP M (VETS PKWY SB I-74 WB)	37+80.00		48+39.00	1,059.00	4.00	470.67	2.0	470.67	211.80			52.71	
DL	RAMP F (VETS PKWY SB / I-74 EB)	23+13.00		28+45.00	532.00	16.00	945.78	2.0	945.78	425.60	105.93			
RT SHOULDER	RAMP F (VETS PKWY SB / I-74 EB)	23+13.00		28+45.00	532.00	6.00	354.67	2.0	354.67	159.60			39.72	
LT SHOULDER	RAMP F (VETS PKWY SB / I-74 EB)	23+13.00		23+66.50	53.50	4.00	23.78	2.0	23.78	10.70			2.66	
DL	RAMP J (VETS PKWY NB / I-74 EB)	0+00.00		0+98.00	98.00	16.00	174.22	2.0	174.22	78.40	19.51			
DL	RAMP J (VETS PKWY NB / I-74 EB)	0+98.00		7+05.00	607.00	16.00	1,079.11	2.0	1,079.11	485.60	120.86			
RT SHOULDER	RAMP J (VETS PKWY NB / I-74 EB)	0+00.00		7+05.00	705.00	6.00	470.00	2.0	470.00	211.50			52.64	
LT SHOULDER	RAMP J (VETS PKWY NB / I-74 EB)	2+09.00		7+05.00	496.00	4.00	220.44	2.0	220.44	99.20			24.69	
DL	RAMP O (VETS PKWY NB I-74 EB)	0+00.00		4+33.50	433.50	5.31	255.77	2.0	255.77	115.09	28.65			
DL	RAMP O (VETS PKWY NB I-74 EB)	4+33.50		25+65.00	2,131.50	16.00	3,789.33	2.0	3,789.33	1,705.20	424.41			
DL	RAMP O (VETS PKWY NB I-74 EB)	25+65.00		31+99.50	634.50	11.32	798.06	2.0	798.06	359.13	89.38			
RT SHOULDER	RAMP O (VETS PKWY NB I-74 EB)	0+00.00		31+99.50	3,199.50	6.00	2,133.00	2.0	2,133.00	959.85			238.90	
LT SHOULDER	RAMP O (VETS PKWY NB I-74 EB)	6+53.50		23+23.00	1,669.50	4.00	742.00	2.0	742.00	333.90			83.10	
GORE	I-74 EB I-55 SB	602+95.00		608+17.00	522.00	11.83	686.14	2.0	686.14	308.76			76.85	
GORE	I-74 EB AT RAMP F	635+95.00		637+79.50	184.50	7.68	157.44	2.0	157.44	70.85			17.63	
GORE	I-74 EB AT RAMP J	641+70.00		642+85.00	115.00	12.38	158.19	2.0	158.19	71.19			17.72	
GORE	I-74 EB AT RAMP O	649+44.00		651+87.00	243.00	4.93	133.11	2.0	133.11	59.90			14.91	
GORE	I-74 EB AT RAMP E (US 51)	706+84.00		709+71.50	287.50	9.16	292.61	2.0	292.61	131.68			32.77	
GORE	I-74 EB AT RAMP D (US 51)	716+92.50		718+77.45	184.95	9.45	194.20	2.0	194.20	87.39			21.75	
GORE	I-74 EB AT RAMP C (US 51)	726+98.00		729+77.50	279.50	6.42	199.38	2.0	199.38	89.72			22.33	
GORE	I-74 WB AT RAMP B (US 51)	732+00.00		729+67.50	232.50	10.62	274.35	2.0	274.35	123.46			30.73	
GORE	I-74 WB AT RAMP A (US 51)	722+36.50		720+54.90	181.60	5.97	120.46	2.0	120.46	54.21			13.49	
GORE	I-74 WB AT RAMP F (US 51)	712+28.50		710+04.00	224.50	6.09	151.91	2.0	151.91	68.36			17.01	
GORE	I-74 WB AT RAMP N (VETS PKWY)	647+25.00		645+16.00	209.00	10.40	241.51	2.0	241.51	108.68			27.05	
GORE	I-74 WB AT RAMP E (VETS PKWY)	632+62.50		630+50.00	212.50	9.97	235.40	2.0	235.40	105.93			26.37	
GORE	I-74 WB AT RAMP M (VETS PKWY)	623+03.50		619+36.00	367.50	5.64	230.30	2.0	230.30	103.64			25.79	
GORE	I-74 WB AT I-55 NB	610+96.00		606+84.00	412.00	9.49	434.43	2.0	434.43	195.49			48.66	
GORE	I-55 NB VETS PKWY NB	658+22.00		656+04.50	217.50	16.30	393.92	2.0	393.92	177.26			44.12	
GORE	VETS PKWY AT RAMP O	72+15.50		69+94.00	221.50	10.23	251.77	2.0	251.77	113.30			28.20	
								SUB-TOTAL 3 =	22,562.48	10,153.12	1,314.14	0.00	1,212.86	0.00
								SUB-TOTAL 2 =	46,443.19	20,966.33	1,881.95	1,429.87	1,906.47	1,429.87
								SUB-TOTAL 1 =	127,928.60	57,567.87	0.00	9,391.62	4,936.38	9,391.62
								TOTAL =	196,934.27	88,687.32	3,196.09	10,821.49	8,055.71	10,821.49
								USE =	196,935.00	88,688.00	3,197.00	10,822.00	8,056.00	10,822.00
									SQ YD	POUND	TON	TON	TON	TON

NOTE:
ADDITIONAL QUANTITIES FOR PAY ITEM 40600290 ARE LOCATED ON SHEET 27.

SCHEDULE OF QUANTITIES

INCIDENTAL HOT-MIX ASPHALT SCHEDULE

LOCATION		STATION	DESCRIPTION	AREA (SQ YD)	INCIDENTAL HMA THICKNESS (INCHES)	X4400196 HMA SURFACE REMOVAL, SPECIAL (SQ YD)	40800029 BITUMINOUS MATERIALS TACK COAT (POUND)	40800050 INCIDENTAL HMA SURFACING (TON)	COMMENTS
LT.	ROADWAY A (I-74 EB)	672+85.60	MEDIAN CROSSOVER	98.00	2.00	98.00	44.10	10.98	20' FROM EDGE OF PAVEMENT
LT.	ROADWAY D (I-74 WB)	669+38.30	MEDIAN CROSSOVER	95.00	2.00	95.00	42.75	10.64	22' FROMEDGE OF PAVEMENT
					TOTAL =	193.00	86.85	21.62	
					USE =	193.00	87.00	22.00	
						SQ YD	POUND	TON	

NOTE:
THE 10 FT WIDE SECTION OF PCC PAVEMENT IN THE CENTER OF THE MEDIAN CROSSOVER SHALL REMAIN IN PLACE AND NOT BE RESURFACED WITH INCIDENTAL HMA.

40600990 TEMPORARY RAMP

LOCATION				STATION	TO	STATION	DROP (INCH)	LENGTH (FT)	WIDTH (FT)	QUANTITY (SQ YD)	CONSTRUCT AFTER:
E.B.	C.L.	PL	ROADWAY A (I-74) RAMP F (VETS PKWY SB)	637+00.00		639+00.00	2.00	200.00	2.00	44.44	MILLING
E.B.	C.L.	PL	ROADWAY A (I-74) RAMP J (VETS PKWY NB)	639+70.00		641+70.00	2.00	200.00	2.00	44.44	MILLING
E.B.	C.L.	PL	ROADWAY A (I-74) RAMP O	651+00.00		653+00.00	2.00	200.00	2.00	44.44	MILLING
E.B.	C.L.	PL	ROADWAY A (I-74) RAMP E (US 51)	705+00.00		707+00.00	2.00	200.00	2.00	44.44	MILLING
E.B.	C.L.	PL	ROADWAY A (I-74) RAMP C (US 51)	730+00.00		732+00.00	2.00	200.00	2.00	44.44	MILLING
W.B.	C.L.	PL	ROADWAY D (I-74) RAMP B (US 51)	734+00.00		732+00.00	2.00	200.00	2.00	44.44	MILLING
W.B.	C.L.	PL	ROADWAY D (I-74) RAMP F (US 51)	709+00.00		707+00.00	2.00	200.00	2.00	44.44	MILLING
W.B.	C.L.	PL	ROADWAY A (I-74) RAMP N (VETS PKWY NB)	649+00.00		647+00.00	2.00	200.00	2.00	44.44	MILLING
W.B.	C.L.	PL	ROADWAY A (I-74) RAMP E (VETS PKWY SB)	634+50.00		632+50.00	2.00	200.00	2.00	44.44	MILLING
W.B.	C.L.	PL	ROADWAY A (I-74) RAMP M (VETS PKWY SB)	621+00.00		619+00.00	2.00	200.00	2.00	44.44	MILLING
N.B.	C.L.	PL	ROADWAY L (VETS PKWY) RAMP O	74+00.00		72+00.00	2.00	200.00	2.00	44.44	MILLING
US 51			RAMP A (US 51)	13+18.00		13+25.00	2.00	22.00	7.00	17.11	MILLING
US 51			RAMP A (US 51)	24+72.00		24+79.00	2.00	22.00	7.00	17.11	MILLING
US 51			RAMP A (US 51)	26+60.40		26+67.40	2.00	22.00	7.00	17.11	MILLING
US 51	RT.	EOP	RAMP B (US 51)	59+50.00		57+50.00	2.00	200.00	2.00	44.44	MILLING
US 51	LT.		RAMP B (US 51)	44+29.00		44+36.00	2.00	22.00	7.00	17.11	MILLING
US 51	RT.		RAMP B (US 51)	44+40.00		44+47.00	2.00	22.00	7.00	17.11	MILLING
US 51			RAMP C (US 51)	5+39.00		5+46.00	2.00	26.00	7.00	20.22	MILLING
US 51	RT.	EOP	RAMP C (US 51)	17+00.00		19+00.00	2.00	200.00	2.00	44.44	MILLING
US 51			RAMP D (US 51)	13+40.00		13+47.00	2.00	26.00	7.00	20.22	MILLING
US 51			RAMP D (US 51)	23+68.00		23+75.00	2.00	22.00	7.00	17.11	MILLING
US 51		EOP	RAMP E (US 51)	4+50.00		6+50.00	2.00	200.00	2.00	44.44	MILLING
US 51			RAMP E (US 51)	21+26.00		21+30.00	2.00	20.00	4.00	8.89	MILLING
US 51			RAMP E (US 51 SPUR) 130' S OF EOP				2.00	22.00	7.00	17.11	MILLING
US 51			RAMP F (US 51)	13+81.75		13+88.75	2.00	26.00	7.00	20.22	MILLING
US 51	LT.	EOP	RAMP F (US 51)	25+00.00		27+00.00	2.00	200.00	2.00	44.44	MILLING
VETS PKWY			RAMP N (VETS PKWY NB)	5+90.40		5+97.40	2.00	22.00	7.00	17.11	MILLING
VETS PKWY			RAMP E (VETS PKWY SB)	27+93.00		26+00.00	2.00	22.00	7.00	17.11	MILLING
VETS PKWY			RAMP M (VETS PKWY NB)	37+80.00		37+87.00	2.00	22.00	7.00	17.11	MILLING
VETS PKWY			RAMP F (VETS PKWY SB)	23+13.00		23+20.00	2.00	22.00	7.00	17.11	MILLING
VETS PKWY			RAMP J (VETS PKWY NB)	6+98.00		7+05.00	2.00	22.00	7.00	17.11	MILLING
								TOTAL =		941.56	
								USE =		942.00	
										SQ YD	

40600372 LONGITUDINAL JOINT SEALANT, HALF WIDTH

LOCATION				STATION	TO	STATION	40600372 LONGITUDINAL JOINT SEALANT, HALF WIDTH (FT)	40600290 BITUMINOUS MATERIAL TACK COAT (POUND)
E.B.	DL.	C.L.	ROADWAY A (I-74)	602+95.00		673+50.00 (BK)	7,055.00	264.56
E.B.	DL.	C.L.	ROADWAY A (I-74)	670+00.00 (AH)		718+77.45	4,877.45	182.90
E.B.	DL.	C.L.	ROADWAY A (I-74)	720+58.68		737+50.00	1,691.32	63.42
E.B.	PL.	C.L.	ROADWAY A (I-74)	602+95.00		673+50.00 (BK)	7,055.00	264.56
E.B.	PL.	C.L.	ROADWAY A (I-74)	670+00.00 (AH)		718+77.45	4,877.45	264.56
E.B.	PL.	C.L.	ROADWAY A (I-74)	720+58.68		737+50.00	1,691.32	264.56
W.B.	DL.	C.L.	ROADWAY D (I-74)	737+50.00		720+54.90	1,695.10	63.57
W.B.	DL.	C.L.	ROADWAY D (I-74)	718+73.80		670+00.00	4,873.80	182.77
W.B.	DL.	C.L.	ROADWAY D (I-74)	670+00.00		606+84.00	6,316.00	236.85
W.B.	PL.	C.L.	ROADWAY D (I-74)	737+50.00		720+54.90	1,695.10	63.57
W.B.	PL.	C.L.	ROADWAY D (I-74)	718+73.80		670+00.00	4,873.80	182.77
W.B.	PL.	C.L.	ROADWAY D (I-74)	670+00.00		606+84.00	6,316.00	236.85
S.B.	DL.	C.L.	ROADWAY G (I-55)	602+95.00		641+74.41 (BK)	3,879.41	145.48
S.B.	DL.	C.L.	ROADWAY G (I-55)	659+74.19 (AH)		659+48.60	25.59	0.96
S.B.	PL.	C.L.	ROADWAY G (I-55)	602+95.00		641+74.41 (BK)	3,879.41	145.48
S.B.	PL.	C.L.	ROADWAY G (I-55)	659+74.19 (AH)		659+48.60	25.59	0.96
N.B.	DL.	C.L.	ROADWAY H (I-55)	658+22.00		649+10.00	912.00	34.20
N.B.	DL.	C.L.	ROADWAY H (I-55)	618+35.00		606+84.00	1,151.00	43.16
N.B.	PL.	C.L.	ROADWAY H (I-55)	658+22.00		649+10.00	912.00	34.20
N.B.	PL.	C.L.	ROADWAY H (I-55)	618+35.00		606+84.00	1,151.00	34.20
N.B.	DL.	C.L.	ROADWAY L (VETS PKWY)	84+12.00		65+00.00	1,912.00	71.70
N.B.	PL.	C.L.	ROADWAY L (VETS PKWY)	84+12.00		65+00.00	1,912.00	71.70
S.B.	DL.	C.L.	ROADWAY L (VETS PKWY)	65+00.00		83+44.00	1,844.00	69.15
S.B.	PL.	C.L.	ROADWAY L (VETS PKWY)	65+00.00		83+44.00	1,844.00	69.15
						TOTAL =	72,465.34	2,991.28
						USE =	72,466.00	2,992.00
							FT	POUND

NOTE:
LONGITUDINAL JOINT SEALANT SHALL BE USED AT ALL HMA MAINLINE PAVING JOINTS. PRIOR TO THE PLACEMENT OF THE LONGITUDINAL JOINT SEALANT A BITUMINOUS MATERIAL TACK COAT SHALL BE APPLIED. (APPLICATION RATE: 0.05 LBS / SQ FT)

ADDITIONAL QUANTITIES FOR PAY ITEM 40600290 ARE LOCATED ON SHEET 26.

SCHEDULE OF QUANTITIES

70300100 SHORT TERM PAVEMENT MARKING

70300150 SHORT TERM PAVEMENT MARKING REMOVAL

LOCATION					STATION	TO	STATION	70300100 QUANTITY (FT)	APPLY AFTER	COLOR	70300150 QUANTITY (SQ FT)
E.B.		C.L.	ROADWAY A (I-74)	SKIP-DASH	602+95.00		673+50.00 (BK)	1,416.00	MILLING & HMA SURFACE	WHITE	236.00
E.B.		C.L.	ROADWAY A (I-74)	SKIP-DASH	670+00.00 (AH)		718+77.45	984.00	MILLING & HMA SURFACE	WHITE	164.00
E.B.		C.L.	ROADWAY A (I-74)	SKIP-DASH	720+58.68		737+50.00	352.00	MILLING & HMA SURFACE	WHITE	58.67
E.B.	RT.	DL	ROADWAY A (I-74)	SHOULDER	608+17.00		635+95.00	120.00	MILLING & HMA SURFACE	WHITE	20.00
E.B.	RT.	DL	ROADWAY A (I-74)	SHOULDER	642+85.00		649+44.00	40.00	MILLING & HMA SURFACE	WHITE	6.67
E.B.	RT.	DL	ROADWAY A (I-74)	SHOULDER	658+18.50		673+50.00 (BK)	64.00	MILLING & HMA SURFACE	WHITE	10.67
E.B.	RT.	DL	ROADWAY A (I-74)	SHOULDER	670+00.00 (AH)		703+61.50	144.00	MILLING & HMA SURFACE	WHITE	24.00
E.B.	RT.	DL	ROADWAY A (I-74)	SHOULDER	709+71.50		716+92.50	40.00	MILLING & HMA SURFACE	WHITE	6.67
E.B.	RT.	DL	ROADWAY A (I-74)	SHOULDER	736+44.50		737+50.00	16.00	MILLING & HMA SURFACE	WHITE	2.67
E.B.	LT.	PL	ROADWAY A (I-74)	SHOULDER	602+95.00		673+50.00 (BK)	288.00	MILLING & HMA SURFACE	YELLOW	48.00
E.B.	RT.	PL	ROADWAY A (I-74)	SHOULDER	670+00.00 (AH)		718+65.50	208.00	MILLING & HMA SURFACE	YELLOW	34.67
E.B.	RT.	PL	ROADWAY A (I-74)	SHOULDER	720+58.68		737+50.00	80.00	MILLING & HMA SURFACE	YELLOW	13.33
W.B.		C.L.	ROADWAY D (I-74)	SKIP-DASH	737+50.00		720+54.90	352.00	MILLING & HMA SURFACE	WHITE	58.67
W.B.		C.L.	ROADWAY D (I-74)	SKIP-DASH	718+73.80		670+00.00	976.00	MILLING & HMA SURFACE	WHITE	162.67
W.B.		C.L.	ROADWAY D (I-74)	SKIP-DASH	670+00.00		606+84.00	1,272.00	MILLING & HMA SURFACE	WHITE	212.00
W.B.	LT.	DL	ROADWAY D (I-74)	SHOULDER	737+50.00		737+23.00	8.00	MILLING & HMA SURFACE	WHITE	1.33
W.B.	LT.	DL	ROADWAY D (I-74)	SHOULDER	729+67.50		722+36.50	40.00	MILLING & HMA SURFACE	WHITE	6.67
W.B.	LT.	DL	ROADWAY D (I-74)	SHOULDER	712+66.25		712+28.50	8.00	MILLING & HMA SURFACE	WHITE	1.33
W.B.	LT.	DL	ROADWAY D (I-74)	SHOULDER	702+84.00		670+00.00 (AH)	136.00	MILLING & HMA SURFACE	WHITE	22.67
W.B.	LT.	DL	ROADWAY D (I-74)	SHOULDER	670+00.00		652+00.00	72.00	MILLING & HMA SURFACE	WHITE	12.00
W.B.	LT.	DL	ROADWAY D (I-74)	SHOULDER	645+16.00		637+00.00	40.00	MILLING & HMA SURFACE	WHITE	6.67
W.B.	LT.	DL	ROADWAY D (I-74)	SHOULDER	630+50.00		623+03.50	40.00	MILLING & HMA SURFACE	WHITE	6.67
W.B.	LT.	DL	ROADWAY D (I-74)	SHOULDER	614+00.00		606+84.00	40.00	MILLING & HMA SURFACE	WHITE	6.67
W.B.	LT.	PL	ROADWAY D (I-74)	SHOULDER	737+50.00		720+67.00	80.00	MILLING & HMA SURFACE	YELLOW	13.33
W.B.	LT.	PL	ROADWAY D (I-74)	SHOULDER	718+73.80		670+00.00	200.00	MILLING & HMA SURFACE	YELLOW	33.33
W.B.	RT.	PL	ROADWAY D (I-74)	SHOULDER	670+00.00		610+96.00	248.00	MILLING & HMA SURFACE	YELLOW	41.33
S.B.		C.L.	ROADWAY G (I-55)	SKIP-DASH	602+95.00		641+74.41 (BK)	776.00	MILLING & HMA SURFACE	WHITE	129.33
S.B.		C.L.	ROADWAY G (I-55)	SKIP-DASH	659+74.19 (AH)		659+48.60	16.00	MILLING & HMA SURFACE	WHITE	2.67
S.B.	RT.	DL	ROADWAY G (I-55)	SHOULDER	602+95.00		641+74.41 (BK)	160.00	MILLING & HMA SURFACE	WHITE	26.67
S.B.	RT.	DL	ROADWAY G (I-55)	SHOULDER	659+74.19 (AH)		659+48.60	8.00	MILLING & HMA SURFACE	WHITE	1.33
S.B.	LT.	PL	ROADWAY G (I-55)	SHOULDER	608+15.00		641+74.41 (BK)	136.00	MILLING & HMA SURFACE	YELLOW	22.67
S.B.	LT.	PL	ROADWAY G (I-55)	SHOULDER	659+74.19 (AH)		659+48.60	8.00	MILLING & HMA SURFACE	YELLOW	1.33
N.B.		C.L.	ROADWAY H (I-55)	SKIP-DASH	658+22.00		649+10.00	192.00	MILLING & HMA SURFACE	WHITE	32.00
N.B.		C.L.	ROADWAY H (I-55)	SKIP-DASH	618+35.00		606+84.00	240.00	MILLING & HMA SURFACE	WHITE	40.00
N.B.	RT.	DL	ROADWAY H (I-55)	SHOULDER	656+04.50		649+10.00	40.00	MILLING & HMA SURFACE	WHITE	6.67
N.B.	RT.	DL	ROADWAY H (I-55)	SHOULDER	618+35.00		610+95.00	32.00	MILLING & HMA SURFACE	WHITE	5.33
N.B.	LT	PL	ROADWAY H (I-55)	SHOULDER	658+22.00		649+10.00	48.00	MILLING & HMA SURFACE	YELLOW	8.00
N.B.	LT	PL	ROADWAY H (I-55)	SHOULDER	618+35.00		606+84.00	56.00	MILLING & HMA SURFACE	YELLOW	9.33
N.B.		C.L.	ROADWAY L (VETS PKWY)	SKIP DASH	84+12.00		65+00.00	392.00	MILLING & HMA SURFACE	WHITE	65.33
N.B.	LT.	DL	ROADWAY L (VETS PKWY)	SHOULDER	84+12.00		76+50.00	32.00	MILLING & HMA SURFACE	WHITE	5.33
N.B.	LT.	DL	ROADWAY L (VETS PKWY)	SHOULDER	69+94.00		65+00.00	32.00	MILLING & HMA SURFACE	WHITE	5.33
N.B.	RT.	PL	ROADWAY L (VETS PKWY)	SHOULDER	81+94.50		65+00.00	80.00	MILLING & HMA SURFACE	YELLOW	13.33
							SUB-TOTAL 1 =	9,512.00			1,585.33
								FT			SQ FT

(CONTINUED ON NEXT SHEET)

SCHEDULE OF QUANTITIES

70300100 SHORT TERM PAVEMENT MARKING
70300150 SHORT TERM PAVEMENT MARKING REMOVAL

LOCATION					STATION	TO	STATION	70300100 QUANTITY (FT)	APPLY AFTER	COLOR	70300150 QUANTITY (SQ FT)
S.B.		C.L.	ROADWAY K (VETS PKWY)	SKIP DASH	65+00.00		83+44.00	384.00	MILLING & HMA SURFACE	WHITE	64.00
S.B.	RT.	DL	ROADWAY K (VETS PKWY)	SHOULDER	65+00.00		83+44.00	88.00	MILLING & HMA SURFACE	WHITE	14.67
S.B.	LT.	PL	ROADWAY K (VETS PKWY)	SHOULDER	65+00.00		83+44.00	88.00	MILLING & HMA SURFACE	YELLOW	14.67
US 51	RT.	RT.	RAMP A (US 51)	SHOULDER	13+18.00		24+79.00	200.00	MILLING & HMA SURFACE	WHITE	33.33
US 51	RT.	RT.	RAMP A (US 51)	SHOULDER	26+60.40		32+67.50	104.00	MILLING & HMA SURFACE	WHITE	17.33
US 51	LT.	LT.	RAMP A (US 51)	SHOULDER	14+57.00		23+02.00	140.00	MILLING & HMA SURFACE	YELLOW	23.33
US 51	LT	LT	RAMP B (US 51)	SHOULDER	62+90.20		44+40.00	312.00	MILLING & HMA SURFACE	WHITE	52.00
US 51	RT	RT	RAMP B (US 51)	SHOULDER	55+05.50		44+29.00	184.00	MILLING & HMA SURFACE	YELLOW	30.67
US 51	RT.	RT.	RAMP C (US 51)	SHOULDER	5+39.00		23+34.00	288.00	MILLING & HMA SURFACE	WHITE	48.00
US 51	LT.	LT.	RAMP C (US 51)	SHOULDER	5+39.00		13+96.00	152.00	MILLING & HMA SURFACE	YELLOW	25.33
US 51	RT.	RT.	RAMP D (US 51)	SHOULDER	13+40.00		23+66.50	176.00	MILLING & HMA SURFACE	WHITE	29.33
US 51	RT.	RT.	RAMP D (US 51)	SHOULDER	25+66.80		31+86.00	112.00	MILLING & HMA SURFACE	WHITE	18.67
US 51	LT.	LT.	RAMP D (US 51)	SHOULDER	13+40.00		21+94.50	152.00	MILLING & HMA SURFACE	YELLOW	25.33
US 51	RT.	RT.	RAMP E (US 51)	SHOULDER	3+59.00		19+64.00	264.00	MILLING & HMA SURFACE	WHITE	44.00
US 51	RT.	RT.	RAMP E (US 51 SPUR) 130' S OF EOP	SHOULDER				40.00	MILLING & HMA SURFACE	WHITE	6.67
US 51	LT.	LT.	RAMP E (US 51)	SHOULDER	9+66.50		21+30.00	200.00	MILLING & HMA SURFACE	YELLOW	33.33
US 51	RT.	RT.	RAMP F (US 51)	SHOULDER	13+81.75		31+82.00	296.00	MILLING & HMA SURFACE	WHITE	49.33
US 51	LT.	LT.	RAMP F (US 51)	SHOULDER	13+81.75		22+40.00	152.00	MILLING & HMA SURFACE	YELLOW	25.33
N.B.	RT.	RT.	RAMP N (VETS PKWY NB)	SHOULDER	0+00.00		5+97.40	104.00	MILLING & HMA SURFACE	WHITE	17.33
VETS PKWY	LT.	LT.	RAMP E (VETS PKWY SB)	SHOULDER	37+00.00		26+00.00	184.00	MILLING & HMA SURFACE	WHITE	30.67
VETS PKWY	RT.	RT.	RAMP E (VETS PKWY SB)	SHOULDER	30+54.00		26+00.00	80.00	MILLING & HMA SURFACE	YELLOW	13.33
VETS PKWY	RT.	RT.	RAMP M (VETS PKWY SB)	SHOULDER	37+80.00		57+66.50	320.00	MILLING & HMA SURFACE	WHITE	53.33
VETS PKWY	LT.	LT.	RAMP M (VETS PKWY SB)	SHOULDER	37+80.00		48+39.00	176.00	MILLING & HMA SURFACE	YELLOW	29.33
VETS PKWY	RT.	RT.	RAMP F (VETS PKWY SB / I-74 EB)	SHOULDER	23+13.00		28+45.00	88.00	MILLING & HMA SURFACE	WHITE	14.67
VETS PKWY	LT.	LT.	RAMP F (VETS PKWY SB / I-74 EB)	SHOULDER	23+13.00		23+66.50	16.00	MILLING & HMA SURFACE	YELLOW	2.67
VETS PKWY	RT.	RT.	RAMP J (VETS PKWY NB / I-74 EB)	SHOULDER	0+00.00		7+05.00	128.00	MILLING & HMA SURFACE	WHITE	21.33
VETS PKWY	LT.	LT.	RAMP J (VETS PKWY NB / I-74 EB)	SHOULDER	2+09.00		7+05.00	88.00	MILLING & HMA SURFACE	YELLOW	14.67
VETS PKWY	RT.	RT.	RAMP O (VETS PKWY NB)	SHOULDER	0+00.00		31+99.50	512.00	MILLING & HMA SURFACE	WHITE	85.33
VETS PKWY	LT.	LT.	RAMP O (VETS PKWY NB)	SHOULDER	6+53.50		23+23.00	280.00	MILLING & HMA SURFACE	YELLOW	46.67
							SUB-TOTAL 2 =	5,308.00			884.67
							SUB-TOTAL 1 =	9,512.00			1,585.33
							TOTAL =	14,820.00		TOTAL =	2,470.00
							USE =	14,820.00		USE =	2,470.00
								FT			SQ FT

NOTE:
SHORT TERM PAVEMENT MARKINGS WILL BE REMOVED FROM THE FINAL SURFACE ONLY.

MODEL: SMODELNAMES
FILE NAME: pw:\\ildot-pw.bentley.com:PWIDOT\Documents\IDOT Offices\District 5\Projects\D570G08\CADData\CADsheets\D570G08-sht-Schedule.dgn

USER NAME = Greg.Eaglin	DESIGNED -	REVISED -	STATE OF ILLINOIS DEPARTMENT OF TRANSPORTATION
	DRAWN -	REVISED -	
PLOT SCALE = 40.0000 ' / in.	CHECKED -	REVISED -	
PLOT DATE = 1/25/2023	DATE -	REVISED -	

SCHEDULE OF QUANTITIES

SCALE: | SHEET 8 OF 17 SHEETS | STA. TO STA.

F.A.I. RTE.	SECTION	COUNTY	TOTAL SHEETS	SHEET NO.
74A	**	MCLEAN	93	29

CONTRACT NO. 70G08
ILLINOIS | FED. AID PROJECT

** (57-7)RS-3,(57-20)RS-4

SCHEDULE OF QUANTITIES

64200116 SHOULDER RUMBLE STRIPS, 16 INCH

LOCATION				STATION	TO	STATION	64200116 SHOULDER RUMBLE STRIPS, 16 INCH QUANTITY (FT)
E.B.	RT.	DL	ROADWAY A (I-74)	608+17.00		635+95.00	2,778.00
E.B.	RT.	DL	ROADWAY A (I-74)	642+85.00		649+44.00	659.00
E.B.	RT.	DL	ROADWAY A (I-74)	658+18.50		673+50.00 (BK)	1,531.50
E.B.	RT.	DL	ROADWAY A (I-74)	670+00.00 (AH)		703+61.50	3,361.50
E.B.	RT.	DL	ROADWAY A (I-74)	709+71.50		716+92.50	721.00
E.B.	RT.	DL	ROADWAY A (I-74)	736+44.50		737+50.00	105.50
E.B.	LT.	PL	ROADWAY A (I-74)	602+95.00		672+59.00	6,964.00
E.B.	LT.	PL	ROADWAY A (I-74)	673+13.00		673+50.00 (BK)	37.00
E.B.	LT.	PL	ROADWAY A (I-74)	670+00.00 (AH)		718+65.50	4,865.50
E.B.	LT.	PL	ROADWAY A (I-74)	720+79.00		737+50.00	1,671.00
W.B.	LT	DL	ROADWAY D (I-74)	737+50.00		737+23.00	27.00
W.B.	LT	DL	ROADWAY D (I-74)	729+67.50		722+36.50	731.00
W.B.	LT	DL	ROADWAY D (I-74)	702+84.00		670+00.00 (AH)	3,284.00
W.B.	LT	DL	ROADWAY D (I-74)	670+00.00		652+00.00	1,800.00
W.B.	LT	DL	ROADWAY D (I-74)	645+16.00		637+00.00	816.00
W.B.	LT	DL	ROADWAY D (I-74)	630+50.00		623+03.50	746.50
W.B.	LT	DL	ROADWAY D (I-74)	614+00.00		606+84.00	716.00
W.B.	LT	PL	ROADWAY D (I-74)	737+50.00		720+67.00	1,683.00
W.B.	LT	PL	ROADWAY D (I-74)	718+73.80		670+00.00	4,873.80
W.B.	LT	PL	ROADWAY D (I-74)	670+00.00		669+66.50	33.50
W.B.	RT	PL	ROADWAY D (I-74)	669+06.50		610+96.00	5,810.50
S.B.	RT.	DL	ROADWAY G (I-55)	602+95.00		641+74.41 (BK)	3,879.41
S.B.	RT.	DL	ROADWAY G (I-55)	659+74.19 (AH)		659+48.60	25.59
S.B.	LT.	PL	ROADWAY G (I-55)	608+15.00		641+74.41 (BK)	3,359.41
S.B.	LT.	PL	ROADWAY G (I-55)	659+74.19 (AH)		659+48.60	25.59
N.B.	LT.	DL	ROADWAY H (I-55)	656+04.50		649+10.00	694.50
N.B.	LT.	DL	ROADWAY H (I-55)	618+35.00		610+95.00	740.00
N.B.	RT.	PL	ROADWAY H (I-55)	658+22.00		649+10.00	912.00
N.B.	RT.	PL	ROADWAY H (I-55)	618+35.00		606+84.00	1,151.00
N.B.	LT.	DL	ROADWAY L (VETS PKWY)	84+12.00		76+50.00	762.00
N.B.	LT.	DL	ROADWAY L (VETS PKWY)	69+94.00		65+00.00	494.00
N.B.	RT.	PL	ROADWAY L (VETS PKWY)	81+94.50		65+00.00	1,694.50
S.B.	RT.	DL	ROADWAY K (VETS PKWY)	65+00.00		83+44.00	1,844.00
S.B.	LT.	PL	ROADWAY K (VETS PKWY)	65+00.00		83+44.00	1,844.00
						TOTAL =	60,641.30
						USE=	60,642.00
							FOOT

48102100 AGGREGATE WEDGE SHOULDER, TYPE B

LOCATION				STATION	TO	STATION	LENGTH (FT)	WIDTH (FT)	AVE. DEPTH (INCHES)	48102100 QUANTITY (TON)
E.B.	RT.	DL	ROADWAY A (I-74)	608+17.00		635+95.00	2,778.00	2.00	2.00	61.73
E.B.	RT.	DL	ROADWAY A (I-74)	642+85.00		649+44.00	659.00	2.00	2.00	14.64
E.B.	RT.	DL	ROADWAY A (I-74)	658+18.50		673+50.00 (BK)	1,531.50	2.00	2.00	34.03
E.B.	RT.	DL	ROADWAY A (I-74)	670+00.00 (AH)		703+61.50	3,361.50	2.00	2.00	74.70
E.B.	RT.	DL	ROADWAY A (I-74)	709+71.50		716+92.50	721.00	2.00	2.00	16.02
E.B.	RT.	DL	ROADWAY A (I-74)	726+90.00		726+98.00	8.00	2.00	2.00	0.18
E.B.	RT.	DL	ROADWAY A (I-74)	736+44.50		737+50.00	105.50	2.00	2.00	2.34
E.B.	LT.	PL	ROADWAY A (I-74)	602+95.00		672+85.60	6,990.60	2.00	2.00	155.35
E.B.	LT.	PL	ROADWAY A (I-74)	672+85.60		673+50.00 (BK)	64.40	2.00	2.00	1.43
E.B.	RT.	PL	ROADWAY A (I-74)	670+00.00 (AH)		718+65.50	4,865.50	2.00	2.00	108.12
E.B.	RT.	PL	ROADWAY A (I-74)	720+79.00		737+50.00	1,671.00	2.00	2.00	37.13
W.B.	RT.	DL	ROADWAY D (I-74)	729+67.50		722+36.50	731.00	2.00	2.00	16.24
W.B.	RT.	DL	ROADWAY D (I-74)	712+66.50		712+28.50	38.00	2.00	2.00	0.84
W.B.	RT.	DL	ROADWAY D (I-74)	702+84.00		670+00.00	3,284.00	2.00	2.00	72.98
W.B.	LT.	DL	ROADWAY D (I-74)	670+00.00		652+00.00	1,800.00	2.00	2.00	40.00
W.B.	LT.	DL	ROADWAY D (I-74)	645+16.00		637+00.00	816.00	2.00	2.00	18.13
W.B.	LT.	DL	ROADWAY D (I-74)	630+50.00		623+03.50	746.50	2.00	2.00	16.59
W.B.	LT.	DL	ROADWAY D (I-74)	614+00.00		606+84.00	716.00	2.00	2.00	15.91
W.B.	RT.	PL	ROADWAY D (I-74)	737+50.00		720+67.00	1,683.00	2.00	2.00	37.40
W.B.	RT.	PL	ROADWAY D (I-74)	718+73.80		670+00.00	4,873.80	2.00	2.00	108.31
W.B.	RT.	PL	ROADWAY D (I-74)	670+00.00		669+38.30	61.70	2.00	2.00	1.37
W.B.	RT.	PL	ROADWAY D (I-74)	669+38.30		610+96.00	5,842.30	2.00	2.00	129.83
S.B.	RT.	DL	ROADWAY G (I-55)	602+95.00		641+74.41 (BK)	3,879.41	2.00	2.00	86.21
S.B.	RT.	DL	ROADWAY G (I-55)	659+74.19 (AH)		659+48.60	25.59	2.00	2.00	0.57
S.B.	LT.	PL	ROADWAY G (I-55)	608+15.00		608+50.00	35.00	4.00	2.00	1.56
S.B.	LT.	PL	ROADWAY G (I-55)	608+50.00		641+74.41 (BK)	3,324.41	4.00	2.00	147.75
S.B.	LT.	PL	ROADWAY G (I-55)	659+74.19 (AH)		659+48.60	25.59	4.00	2.00	1.14
N.B.	LT.	DL	ROADWAY H (I-55)	656+04.50		649+10.00	694.50	2.00	2.00	15.43
N.B.	LT.	DL	ROADWAY H (I-55)	618+35.00		610+95.00	740.00	2.00	2.00	16.44
N.B.	RT.	PL	ROADWAY H (I-55)	658+22.00		649+10.00	912.00	2.00	2.00	20.27
N.B.	RT.	DL	ROADWAY H (I-55	618+35.00		606+84.00	1,151.00	2.00	2.00	25.58
									SUB-TOTAL 1 =	1,278.24
										TON

(CONTINUED ON NEXT SHEET)

SCHEDULE OF QUANTITIES

48102100 AGGREGATE WEDGE SHOULDER, TYPE B

LOCATION				STATION	TO	STATION	LENGTH (FT)	WIDTH (FT)	AVE. DEPTH (INCHES)	48102100 QUANTITY (TON)
N.B.	LT.	DL	ROADWAY L (VETS PKWY)	84+12.00		76+50.00	762.00	2.00	2.00	16.93
N.B.	LT.	DL	ROADWAY L (VETS PKWY)	69+94.00		65+00.00	494.00	2.00	2.00	10.98
N.B.	RT.	DL	ROADWAY L (VETS PKWY)	81+94.50		65+00.00	1,694.50	2.00	2.00	37.66
S.B.	RT.	DL	ROADWAY K (VETS PKWY)	65+00.00		83+44.00	1,844.00	2.00	2.00	40.98
S.B.	LT.	PL	ROADWAY K (VETS PKWY)	65+00.00		83+44.00	1,844.00	2.00	2.00	40.98
US 51	RT.	DL	RAMP A (US 51)	13+18.00		24+79.00	1,161.00	2.00	2.00	25.80
US 51	RT.	DL	RAMP A (US 51)	26+60.40		32+67.50	607.10	2.00	2.00	13.49
US 51	LT.	DL	RAMP A (US 51)	14+57.00		23+02.00	845.00	2.00	2.00	18.78
US 51	RT.	DL	RAMP B (US 51)	62+90.20		44+40.00	1,850.20	2.00	2.00	41.12
US 51	LT.	DL	RAMP B (US 51)	55+05.50		44+29.00	1,076.50	2.00	2.00	23.92
US 51	RT.	DL	RAMP C (US 51)	5+39.00		23+34.00	1,795.00	2.00	2.00	39.89
US 51	LT.	DL	RAMP C (US 51)	5+39.00		13+96.00	857.00	2.00	2.00	19.04
US 51	RT.	DL	RAMP D (US 51)	13+40.00		23+66.50	1,026.50	2.00	2.00	22.81
US 51	RT.	DL	RAMP D (US 51)	25+66.80		31+86.00	619.20	2.00	2.00	13.76
US 51	LT.	DL	RAMP D (US 51)	13+40.00		21+94.50	854.50	2.00	2.00	18.99
US 51	RT.	DL	RAMP E (US 51)	3+59.00		19+64.00	1,605.00	2.00	2.00	35.67
US 51	RT.	DL	RAMP E (US 51 SPUR) 130' S OF EOP				214.00	2.00	2.00	4.76
US 51	LT.	DL	RAMP E (US 51)	9+66.50		21+30.00	1,163.50	2.00	2.00	25.86
US 51	RT.	DL	RAMP F (US 51)	13+81.75		31+82.00	1,800.25	2.00	2.00	40.01
US 51	LT.	DL	RAMP F (US 51)	13+81.75		22+40.00	858.25	2.00	2.00	19.07
N.B.	RT.	DL	RAMP N (VETS PKWY NB)	0+00.00		5+97.40	597.40	2.00	2.00	13.28
VETS PKWY	LT.	DL	RAMP E (VETS PKWY SB)	37+00.00		26+00.00	1,100.00	2.00	2.00	24.44
VETS PKWY	RT.	DL	RAMP E (VETS PKWY SB)	30+54.00		26+00.00	454.00	2.00	2.00	10.09
VETS PKWY	RT.	DL	RAMP M (VETS PKWY SB)	37+80.00		57+66.50	1,986.50	2.00	2.00	44.14
VETS PKWY	LT.	DL	RAMP M (VETS PKWY SB)	37+80.00		48+39.00	1,059.00	2.00	2.00	23.53
VETS PKWY	LT.	DL	RAMP F (VETS PKWY SB / I-74 EB)	23+13.00		28+45.00	532.00	2.00	2.00	11.82
VETS PKWY	RT.	DL	RAMP F (VETS PKWY SB / I-74 EB)	23+13.00		23+66.50	53.50	2.00	2.00	1.19
VETS PKWY	RT.	DL	RAMP J (I-74 EB / VETS PKWY NB)	0+00.00		7+05.00	705.00	2.00	2.00	15.67
VETS PKWY	LT.	DL	RAMP J (I-74 EB / VETS PKWY NB)	2+09.00		7+05.00	496.00	2.00	2.00	11.02
VETS PKWY	RT.	DL	RAMP O (VETS PKWY NB)	0+00.00		31+99.50	3,199.50	2.00	2.00	71.10
VETS PKWY	LT.	DL	RAMP O (VETS PKWY NB)	6+53.50		23+23.00	1,669.50	2.00	2.00	37.10
									SUB-TOTAL 2 =	773.86
									SUB-TOTAL 1 =	1,278.24
									TOTAL =	2,052.10
									USE =	2,053.00
										TON

MODEL: $MODELNAME$
FILE NAME: pw:\\ildot-pw.bentley.com:PWIDOT\Documents\IDOT Offices\District 5\Projects\D570G08\CADData\CADSheets\D570G08-sht-Schedule.dgn

USER NAME = Greg.Eaglin	DESIGNED -	REVISED -	STATE OF ILLINOIS DEPARTMENT OF TRANSPORTATION
	DRAWN -	REVISED -	
PLOT SCALE = 40.0000 ' / in.	CHECKED -	REVISED -	
PLOT DATE = 1/25/2023	DATE -	REVISED -	

SCHEDULE OF QUANTITIES

SCALE: | SHEET 10 OF 17 SHEETS | STA. TO STA.

F.A.I. RTE.	SECTION	COUNTY	TOTAL SHEETS	SHEET NO.
74A	**	MCLEAN	93	31
		CONTRACT NO. 70G08		
	ILLINOIS	FED. AID PROJECT		

** (57-7)RS-3,(57-20)RS-4

SCHEDULE OF QUANTITIES

78100100 RAISED REFLECTIVE PAVEMENT MARKER

78300200 RAISED REFLECTIVE PAVEMENT MARKER REMOVAL

LOCATION				STATION	TO STATION	LENGTH (FT)	78100100 ONE-WAY AMBER QUANTITY (EACH)	78100100 ONE-WAY CRYSTAL QUANTITY (EACH)	78300200 RRPM REMOVAL QUANTITY (EACH)
E.B.	C.L.	ROADWAY A (I-74)	SKIP DASH	602+95.00	673+50.00 (BK)	7,055.00		178.00	178.00
E.B.	C.L.	ROADWAY A (I-74)	SKIP DASH	670+00.00 (AH)	718+77.45	4,877.45		124.00	124.00
E.B.	C.L.	ROADWAY A (I-74)	SKIP DASH	720+58.68	737+50.00	1,691.32		46.00	46.00
W.B.	C.L.	ROADWAY D (I-74)	SKIP DASH	737+50.00	720+54.90	1,695.10		46.00	46.00
W.B.	C.L.	ROADWAY D (I-74)	SKIP DASH	718+73.80	670+00.00	4,873.80		122.00	122.00
W.B.	C.L.	ROADWAY D (I-74)	SKIP DASH	670+00.00	606+84.00	6,316.00		160.00	160.00
S.B.	C.L.	ROADWAY G (I-55)	SKIP DASH	602+95.00	641+74.41 (BK)	3,879.41		98.00	98.00
S.B.	C.L.	ROADWAY G (I-55)	SKIP DASH	659+74.19 (AH)	659+48.60	25.59		4.00	4.00
N.B.	C.L,	ROADWAY H (I-55)	SKIP DASH	658+22.00	649+10.00	912.00		26.00	26.00
N.B.	C.L.	ROADWAY H (I-55)	SKIP DASH	618+35.00	606+84.00	1,151.00		32.00	32.00
S.B.	C.L.	ROADWAY K (VETS PKWY)	SKIP DASH	83+44.00	65+00.00	1,844.00		50.00	50.00
N.B.	C.L.	ROADWAY L (VETS PKWY)	SKIP DASH	84+12.00	65+00.00	1,912.00		50.00	50.00
US 51	RT.	RAMP A (US 51)	EOP	13+18.00	14+60.00	142.00		9.00	9.00
US 51	LT.	RAMP A (US 51)	EOP	13+18.00	14+60.00	142.00		4.00	4.00
US 51	LT.	RAMP A (US 51)	EOP	14+60.00	18+10.28	350.28	10.00		10.00
US 51	RT.	RAMP B (US 51)	EOP	62+90.20	54+50.00	840.20		44.00	44.00
US 51	LT.	RAMP B (US 51)	EOP	57+47.50	54+50.00	297.50		8.00	8.00
US 51	LT.	RAMP B (US 51)	EOP	54+50.00	50+42.14	407.86	12.00		12.00
US 51	LT.	RAMP B (I-74 WB)	EOP	732+09.00	729+11.00	298.00		9.00	9.00
US 51	LT.	RAMP C (US 51)	EOP	5+39.00	5+64.00	25.00		2.00	2.00
US 51	LT.	RAMP C (US 51)	EOP	5+64.00	7+03.00	139.00	5.00		5.00
US 51	RT.	RAMP D (US 51)	EOP	13+40.00	13+65.50	25.50		2.00	2.00
US 51	LT.	RAMP D (US 51)	EOP	13+40.00	13+65.50	25.50		1.00	1.00
US 51	LT.	RAMP D (US 51)	EOP	13+65.50	17+04.11	338.61	10.00		10.00
						SUB-TOTAL 1 =	37.00	1,015.00	1,052.00
							EACH	EACH	EACH

(CONTINUED ON NEXT SHEET)

SCHEDULE OF QUANTITIES

78100100 RAISED REFLECTIVE PAVEMENT MARKER

78300200 RAISED REFLECTIVE PAVEMENT MARKER REMOVAL

LOCATION				STATION	TO STATION	LENGTH (FT)	78100100 ONE-WAY AMBER QUANTITY (EACH)	78100100 ONE-WAY CRYSTAL QUANTITY (EACH)	78300200 RRPM REMOVAL QUANTITY (EACH)
US 51	RT.	RAMP E (US 51)	EOP	3+59.00	10+32.00	673.00		35.00	35.00
US 51	LT.	RAMP E (US 51)	EOP	6+65.00	10+32.00	367.00		10.00	10.00
US 51	LT.	RAMP E (US 51)	EOP	10+32.00	13+97.75	365.75	10.00		10.00
US 51	RT.	RAMP E (I-74 EB)	EOP	706+68.00	710+37.00	369.00		10.00	10.00
US 51	LT.	RAMP F (US 51)	EOP	13+81.75	14+02.00	20.25		1.00	1.00
US 51	LT.	RAMP F (US 51)	EOP	14+02.00	15+51.55	149.55	5.00		5.00
N.B.	RT.	RAMP N (VETS PKWY NB)	EOP	0+00.00	5+97.40	597.40		31.00	31.00
N.B.	LT.	RAMP N (VETS PKWY NB)	EOP	4+71.50	6+76.90	205.40		7.00	7.00
N.B.	LT.	RAMP N (VETS PKWY NB / I-74 WB)	EOP	647+25.00	644+53.00	272.00		8.00	8.00
VETS PKWY	LT.	RAMP E (VETS PKWY SB)	EOP	37+00.00	30+08.00	692.00		36.00	36.00
VETS PKWY	RT.	RAMP E (VETS PKWY SB)	EOP	32+65.00	30+08.00	257.00		7.00	7.00
VETS PKWY	RT.	RAMP E (VETS PKWY SB)	EOP	30+08.00	29+25.58	82.42	3.00		3.00
VETS PKWY	RT.	RAMP E (VETS PKWY / I-74 WB)	EOP	632+62.50	630+04.00	258.50		8.00	8.00
VETS PKWY	LT.	RAMP M (VETS PKWY SB)	EOP	37+80.00	39+75.28	195.28	6.00		6.00
GORE	RT.	ROADWAY D GORE (I-74 WB)	EOP	610+96.00	606+84.00	412.00		11.00	
GORE	LT.	ROADWAY H GORE (I-55 NB)	EOP	610+95.00	606+84.00	411.00		11.00	
GORE	RT.	ROADWAY A GORE (I-74 EB)	EOP	602+95.00	608+17.00	522.00		14.00	
GORE	LT.	ROADWAY G GORE (I-55 SB)	EOP	602+95.00	608+15.00	520.00		13.00	
VETS PKWY	RT.	RAMP J (VETS PKWY / I-74 EB)	EOP	0+00.00	2+30.00	230.00		13.00	13.00
VETS PKWY	LT.	RAMP J (VETS PKWY / I-74 EB)	EOP	0+97.00	2+30.00	133.00		4.00	4.00
VETS PKWY	LT.	RAMP J (VETS PKWY / I-74 EB)	EOP	2+30.00	7+05.00	475.00	13.00		13.00
VETS PKWY	RT.	RAMP J (VETS PKWY / I-74 EB)	EOP	641+70.00	643+02.00	132.00		4.00	4.00
VETS PKWY	RT.	RAMP O (VETS PKWY NB)	EOP	0+00.00	7+00.00	700.00		36.00	36.00
VETS PKWY	LT.	RAMP O (VETS PKWY NB)	EOP	4+33.58	7+00.00	266.42		7.00	7.00
VETS PKWY	LT.	RAMP O (VETS PKWY NB)	EOP	7+00.00	11+48.02	448.02	12.00		12.00
VETS PKWY	LT.	RAMP O (VETS PKWY NB)	EOP	72+32.00	69+47.00	285.00		8.00	8.00
						SUB-TOTAL 2 =	49.00	274.00	274.00
						SUB-TOTAL 1 =	37.00	1,015.00	1,052.00
						TOTAL =	86.00	1,289.00	1,326.00
							EACH	EACH	EACH

MODEL: $MODEL$NAMES
FILE NAME: pw:\\ildot-pw.bentley.com:PWIDOT\Documents\IDOT Offices\District 5\Projects\D570G08\CADData\CAD\Sheets\D570G08-sht-Schedule.dgn

USER NAME = Greg.Eaglin	DESIGNED -	REVISED -	STATE OF ILLINOIS DEPARTMENT OF TRANSPORTATION
	DRAWN -	REVISED -	
PLOT SCALE = 40.0000 ' / in.	CHECKED -	REVISED -	
PLOT DATE = 1/25/2023	DATE -	REVISED -	

SCHEDULE OF QUANTITIES

SCALE: | SHEET 12 OF 17 SHEETS | STA. TO STA.

F.A.I. RTE.	SECTION	COUNTY	TOTAL SHEETS	SHEET NO.
74A	**	MCLEAN	93	33
		CONTRACT NO. 70G08		
	ILLINOIS	FED. AID PROJECT		

** (57-7)RS-3,(57-20)RS-4

SCHEDULE OF QUANTITIES

78000400 THERMOPLASTIC PAVEMENT MARKING - LINE 6"

78011035 GROOVING FOR RECESSED PAVEMENT MARKING 7"

70300241 TEMPORARY PAVEMENT MARKING - LINE 6" - PAINT

LOCATION					STATION	TO	STATION	78000400 QUANTITY (FT)	78011035 QUANTITY (FT)	70300241 QUANTITY (FT)	COLOR
E.B.		C.L.	ROADWAY A (I-74)	SKIP-DASH	602+95.00		673+50.00 (BK)	1,770.00	1,770.00	1,770.00	WHITE
E.B.		C.L.	ROADWAY A (I-74)	SKIP-DASH	670+00.00 (AH)		737+50.00	1,700.00	1,700.00	1,700.00	WHITE
E.B.	RT.	DL	ROADWAY A (I-74)	EOP	608+17.00		635+71.00	2,754.00	2,754.00	2,754.00	WHITE
E.B.	RT.	DL	ROADWAY A (I-74)	EOP	643+02.00		649+13.00	611.00	611.00	611.00	WHITE
E.B.	RT.	DL	ROADWAY A (I-74)	EOP	658+18.50		673+50.00 (BK)	1,531.50	1,531.50	1,531.50	WHITE
E.B.	RT.	DL	ROADWAY A (I-74)	EOP	670+00.00 (AH)		703+61.50	3,361.50	3,361.50	3,361.50	WHITE
E.B.	RT.	DL	ROADWAY A (I-74)	EOP	710+37.00		716+66.00	629.00	629.00	629.00	WHITE
E.B.	RT.	DL	ROADWAY A (I-74)	EOP	736+44.50		737+50.00	105.50	105.50	105.50	WHITE
E.B.	LT	PL	ROADWAY A (I-74)	EOP	602+95.00		673+50.00 (BK)	7,055.00	7,055.00	7,055.00	YELLOW
E.B.	LT	PL	ROADWAY A (I-74)	EOP	670+00.00 (AH)		737+50.00	6,750.00	6,750.00	6,750.00	YELLOW
W.B.		C.L.	ROADWAY D (I-74)	SKIP-DASH	737+50.00		670+00.00	1,690.00	1,690.00	1,690.00	WHITE
W.B.		C.L.	ROADWAY D (I-74)	SKIP-DASH	670+00.00		606+84.00	1,590.00	1,590.00	1,590.00	WHITE
W.B.	LT.	DL	ROADWAY D (I-74)	EOP	737+50.00		737+23.00	27.00	27.00	27.00	WHITE
W.B.	LT.	DL	ROADWAY D (I-74)	EOP	729+11.00		722+68.00	643.00	643.00	643.00	WHITE
W.B.	LT.	DL	ROADWAY D (I-74)	EOP	702+84.00		670+00.00	3,284.00	3,284.00	3,284.00	WHITE
W.B.	LT.	DL	ROADWAY D (I-74)	EOP	670+00.00		652+00.00	1,800.00	1,800.00	1,800.00	WHITE
W.B.	LT.	DL	ROADWAY D (I-74)	EOP	644+53.00		637+00.00	753.00	753.00	753.00	WHITE
W.B.	LT.	DL	ROADWAY D (I-74)	EOP	630+04.00		623+38.40	665.60	665.60	665.60	WHITE
W.B.	LT.	DL	ROADWAY D (I-74)	EOP	614+00.00		606+84.00	716.00	716.00	716.00	WHITE
W.B.	RT	PL	ROADWAY D (I-74)	EOP	737+50.00		670+00.00	6,750.00	6,750.00	6,750.00	YELLOW
W.B.	RT	PL	ROADWAY D (I-74)	EOP	670+00.00		610+96.00	5,904.00	5,904.00	5,904.00	YELLOW
S.B.		C.L.	ROADWAY G (I-55)	SKIP-DASH	602+95.00		641+74.41 (BK)	970.00	970.00	970.00	WHITE
S.B.		C.L.	ROADWAY G (I-55)	SKIP-DASH	659+74.19 (AH)		659+48.60	10.00	10.00	10.00	WHITE
S.B.	RT.	DL	ROADWAY G (I-55)	EOP	602+95.00		641+74.41 (BK)	3,879.41	3,879.41	3,879.41	WHITE
S.B.	RT.	DL	ROADWAY G (I-55)	EOP	659+74.19 (AH)		659+48.60	25.59	25.59	25.59	WHITE
S.B.	LT.	PL	ROADWAY G (I-55)	EOP	608+15.00		641+74.41 (BK)	3,359.41	3,359.41	3,359.41	YELLOW
S.B.	LT.	PL	ROADWAY G (I-55)	EOP	659+74.19 (AH)		659+48.60	25.59	25.59	25.59	YELLOW
N.B.		C.L.	ROADWAY H (I-55)	SKIP-DASH	658+22.00		649+10.00	240.00	240.00	240.00	WHITE
N.B.		C.L.	ROADWAY H (I-55)	SKIP-DASH	618+35.00		606+84.00	290.00	290.00	290.00	WHITE
N.B.	LT.	DL	ROADWAY H (I-55)	EOP	656+04.50		649+10.00	694.50	694.50	694.50	WHITE
N.B.	LT.	DL	ROADWAY H (I-55)	EOP	618+35.00		610+95.00	740.00	740.00	740.00	WHITE
N.B.	RT.	PL	ROADWAY H (I-55)	EOP	658+22.00		649+10.00	912.00	912.00	912.00	YELLOW
N.B.	RT.	PL	ROADWAY H (I-55)	EOP	618+35.00		606+84.00	1,151.00	1,151.00	1,151.00	YELLOW
							SUB-TOTAL 1 =	62,387.60	62,387.60	62,387.60	
								FT	FT	FT	

(CONTINUED ON NEXT SHEET)

SCHEDULE OF QUANTITIES

78000400 THERMOPLASTIC PAVEMENT MARKING - LINE 6"

78011035 GROOVING FOR RECESSED PAVEMENT MARKING 7"

70300241 TEMPORARY PAVEMENT MARKING - LINE 6" - PAINT

LOCATION					STATION	TO	STATION	78000400 QUANTITY (FT)	78011035 QUANTITY (FT)	70300241 QUANTITY (FT)	COLOR
N.B.		C.L.	ROADWAY L (VETS PKWY)	SKIP DASH	84+12.00		65+00.00	490.00	490.00	490.00	WHITE
N.B.	LT.	DL	ROADWAY L (VETS PKWY)	EOP	84+12.00		76+50.00	762.00	762.00	762.00	WHITE
N.B.	LT.	DL	ROADWAY L (VETS PKWY)	EOP	69+47.00		65+00.00	447.00	447.00	447.00	WHITE
N.B.	RT.	PL	ROADWAY L (VETS PKWY)	EOP	81+94.50		65+00.00	1,694.50	1,694.50	1,694.50	YELLOW
S.B.		C.L.	ROADWAY K (VETS PKWY)	SKIP-DASH	65+00.00		83+44.00	480.00	480.00	480.00	WHITE
S.B.	RT.	DL	ROADWAY K (VETS PKWY)	EOP	65+00.00		83+44.00	1,844.00	1,844.00	1,844.00	WHITE
S.B.	LT.	PL	ROADWAY K (VETS PKWY)	EOP	65+00.00		83+44.00	1,844.00	1,844.00	1,844.00	YELLOW
US 51	RT.		RAMP A (US 51)	EOP	13+18.00		32+67.50	1,949.50	1,949.50	1,949.50	WHITE
US 51	LT.		RAMP A (US 51)	EOP	14+60.00		22+71.00	811.00	811.00	811.00	YELLOW
US 51	LT.		RAMP B (US 51)	EOP	62+90.20		44+40.00	1,850.20	1,850.20	1,850.20	WHITE
US 51	RT.		RAMP B (US 51)	EOP	54+50.00		44+29.00	1,021.00	1,021.00	1,021.00	YELLOW
US 51	RT.		RAMP C (US 51)	EOP	5+39.00		23+34.00	1,795.00	1,795.00	1,795.00	WHITE
US 51	LT.		RAMP C (US 51)	EOP	5+64.00		13+43.00	779.00	779.00	779.00	YELLOW
US 51	RT.		RAMP D (US 51)	EOP	13+40.00		31+44.50	1,804.50	1,804.50	1,804.50	WHITE
US 51	LT.		RAMP D (US 51)	EOP	13+65.50		21+68.00	802.50	802.50	802.50	YELLOW
US 51	RT.		RAMP E (US 51)	EOP	3+59.00		19+64.00	1,605.00	1,605.00	1,605.00	WHITE
US 51	RT.		RAMP E (US 51 SPUR) 130' S OF EOP	EOP				214.00	214.00	214.00	WHITE
US 51	LT.		RAMP E (US 51 SPUR) 130' S OF EOP	EOP				164.00	164.00	164.00	WHITE
US 51	RT.		RAMP E (US 51)	EOP	20+36.00		21+30.00	94.00	94.00	94.00	WHITE
US 51	LT.		RAMP E (US 51)	EOP	10+32.00		21+30.00	1,098.00	1,098.00	1,098.00	YELLOW
US 51	RT.		RAMP F (US 51)	EOP	13+81.75		31+82.00	1,800.25	1,800.25	1,800.25	WHITE
US 51	LT.		RAMP F (US 51)	EOP	14+02.00		21+83.00	781.00	781.00	781.00	YELLOW
N.B.	RT.		RAMP N (VETS PKWY NB)	EOP	0+00.00		5+97.40	597.40	597.40	597.40	WHITE
VETS PKWY	LT.		RAMP E (VETS PKWY SB)	EOP	37+00.00		26+00.00	1,100.00	1,100.00	1,100.00	WHITE
VETS PKWY	RT.		RAMP E (VETS PKWY SB)	EOP	30+08.00		26+00.00	408.00	408.00	408.00	YELLOW
VETS PKWY	RT.		RAMP M (VETS PKWY SB)	EOP	37+80.00		57+66.50	1,986.50	1,986.50	1,986.50	WHITE
VETS PKWY	LT.		RAMP M (VETS PKWY SB)	EOP	37+80.00		48+31.00	1,051.00	1,051.00	1,051.00	YELLOW
VETS PKWY	RT.		RAMP F (VETS PKWY SB / I-74 EB)	EOP	23+13.00		28+45.00	532.00	532.00	532.00	WHITE
VETS PKWY	LT.		RAMP F (VETS PKWY SB / I-74 EB)	EOP	23+13.00		23+43.00	30.00	30.00	30.00	YELLOW
VETS PKWY	RT.		RAMP J (I-74 EB / VETS PKWY NB)	EOP	0+00.00		7+05.00	705.00	705.00	705.00	WHITE
VETS PKWY	LT.		RAMP J (I-74 EB / VETS PKWY NB)	EOP	2+30.00		7+05.00	475.00	475.00	475.00	YELLOW
VETS PKWY	RT.		RAMP O (VETS PKWY NB)	EOP	0+00.00		31+99.50	3,199.50	3,199.50	3,199.50	WHITE
VETS PKWY	LT.		RAMP O (VETS PKWY NB)	EOP	7+00.00		22+91.00	1,591.00	1,591.00	1,591.00	YELLOW
							SUB-TOTAL 2 =	35,805.85	35,805.85	35,805.85	
							SUB-TOTAL 1 =	62,387.60	62,387.60	62,387.60	
							TOTAL =	98,193.45	98,193.45	98,193.45	
							USE =	98,194.00	98,194.00	98,194.00	
								FT	FT	FT	

MODEL: $MODEL$NAME$
FILE NAME: pw:\\ildot-pw.bentley.com:PWIDOT\Documents\IDOT Offices\District 5\Projects\D570G08\CADData\CADSheets\D570G08-sht-Schedule.dgn

USER NAME = Greg.Eaglin	DESIGNED -	REVISED -	STATE OF ILLINOIS DEPARTMENT OF TRANSPORTATION	SCHEDULE OF QUANTITIES	F.A.I. RTE.	SECTION	COUNTY / TOTAL SHEETS / SHEET NO.
	DRAWN -	REVISED -			74A	**	MCLEAN 93 35
PLOT SCALE = 40.0000 ' / in.	CHECKED -	REVISED -					CONTRACT NO. 70G08
PLOT DATE = 1/25/2023	DATE -	REVISED -		SCALE: SHEET 14 OF 17 SHEETS STA. TO STA.			ILLINOIS FED. AID PROJECT

** (57-7)RS-3,(57-20)RS-4

SCHEDULE OF QUANTITIES

78000500 THERMOPLASTIC PAVEMENT MARKING - LINE 8"

78011045 GROOVING FOR RECESSED PAVEMENT MARKING 9"

70300251 TEMPORARY PAVEMENT MARKING - LINE 8"- PAINT

LOCATION					STATION	TO	STATION	78000500 QUANTITY (FT)	78011045 QUANTITY (FT)	70300251 QUANTITY (FT)	COLOR
E.B.	RT.	DL	ROADWAY A (I-74)	EOP (GORE)	602+95.00		608+17.00	522.00	522.00	522.00	WHITE
E.B.	RT.	DL	ROADWAY A (I-74)	EOP (GORE)	635+71.00		637+79.50	208.50	208.50	208.50	WHITE
E.B.	RT.	DL	ROADWAY A (I-74)	EOP (GORE)	641+70.00		643+02.00	132.00	132.00	132.00	WHITE
E.B.	RT.	DL	ROADWAY A (I-74)	EOP (GORE)	649+13.00		651+87.00	274.00	274.00	274.00	WHITE
E.B.	RT.	DL	ROADWAY A (I-74)	EOP (GORE)	706+68.00		710+37.00	369.00	369.00	369.00	WHITE
E.B.	RT.	DL	ROADWAY A (I-74)	EOP (GORE)	716+66.00		720+56.00	390.00	390.00	390.00	WHITE
E.B.	RT.	DL	ROADWAY A (I-74)	EOP (GORE)	726+47.00		729+77.50	330.50	330.50	330.50	WHITE
W.B.	LT.	DL	ROADWAY D (I-74)	EOP (GORE)	732+09.00		729+11.00	298.00	298.00	298.00	WHITE
W.B.	LT.	DL	ROADWAY D (I-74)	EOP (GORE)	722+68.00		720+54.90	213.10	213.10	213.10	WHITE
W.B.	LT.	DL	ROADWAY D (I-74)	EOP (GORE)	712+66.50		709+77.00	289.50	289.50	289.50	WHITE
W.B.	LT.	DL	ROADWAY D (I-74)	EOP (GORE)	647+25.00		644+53.00	272.00	272.00	272.00	WHITE
W.B.	LT.	DL	ROADWAY D (I-74)	EOP (GORE)	632+62.50		630+04.00	258.50	258.50	258.50	WHITE
W.B.	LT.	DL	ROADWAY D (I-74)	EOP (GORE)	623+38.00		619+36.00	402.00	402.00	402.00	WHITE
W.B.	RT.	PL	ROADWAY D (I-74)	EOP (GORE)	610+96.00		606+84.00	412.00	412.00	412.00	WHITE
S.B.	LT.	PL	ROADWAY G (I-55)	EOP (GORE)	602+95.00		608+15.00	520.00	520.00	520.00	WHITE
N.B.	LT.	DL	ROADWAY H (I-55)	EOP (GORE)	658+22.00		656+04.50	217.50	217.50	217.50	WHITE
N.B.	LT.	DL	ROADWAY H (I-55)	EOP (GORE)	610+95.00		606+84.00	411.00	411.00	411.00	WHITE
N.B.	LT.	DL	ROADWAY L (VETS PKWY)	EOP (GORE)	72+32.00		69+47.00	285.00	285.00	285.00	WHITE
N.B.	RT	PL	ROADWAY L (VETS PKWY)	EOP (GORE	84+12.00		81+94.50	217.50	217.50	217.50	WHITE
US 51	LT.		RAMP A (US 51)	EOP (GORE)	13+18.00		14+60.00	142.00	142.00	142.00	WHITE
US 51	LT.		RAMP A (US 51)	EOP (GORE)	22+71.00		24+79.00	208.00	208.00	208.00	WHITE
US 51	LT.		RAMP A (US 51)	EOP (GORE)	24+79.00		26+60.40	181.40	181.40	181.40	WHITE
US 51	LT.		RAMP B (US 51)	EOP (GORE)	57+47.50		54+50.00	297.50	297.50	297.50	WHITE
US 51	LT.		RAMP C (US 51)	EOP (GORE)	5+39.00		5+64.00	25.00	25.00	25.00	WHITE
US 51	LT.		RAMP C (US 51)	EOP (GORE)	13+43.00		16+70.50	327.50	327.50	327.50	WHITE
US 51	LT.		RAMP E (US 51)	EOP (GORE)	6+65.00		10+32.00	367.00	367.00	367.00	WHITE
US 51	LT.		RAMP D (US 51)	EOP (GORE)	13+40.00		13+65.50	25.50	25.50	25.50	WHITE
US 51	LT.		RAMP D (US 51)	EOP (GORE)	21+68.00		25+53.00	385.00	385.00	385.00	WHITE
US 51	LT.		RAMP F (US 51)	EOP (GORE)	13+81.75		14+02.00	20.25	20.25	20.25	WHITE
US 51	LT		RAMP F (US 51)	EOP (GORE)	21+83.00		24+89.00	306.00	306.00	306.00	WHITE
VETS PKWY	LT.		RAMP N (VETS PKWY NB)	EOP (GORE)	4+71.50		7+40.00	268.50	268.50	268.50	WHITE
VETS PKWY	LT.		RAMP E (VETS PKWY SB)	EOP (GORE)	32+65.00		30+08.00	257.00	257.00	257.00	WHITE
VETS PKWY	LT.		RAMP M (VETS PKWY SB)	EOP (GORE)	48+31.00		52+30.00	399.00	399.00	399.00	WHITE
VETS PKWY	LT.		RAMP F (VETS PKWY SB / I-74 EB)	EOP (GORE)	23+43.00		25+52.50	209.50	209.50	209.50	WHITE
VETS PKWY	LT.		RAMP J (I-74 EB / VETS PKWY NB)	EOP (GORE)	0+97.00		2+30.00	133.00	133.00	133.00	WHITE
VETS PKWY	LT.		RAMP O (VETS PKWY NB)	EOP (GORE)	4+15.50		7+00.00	284.50	284.50	284.50	WHITE
VETS PKWY	LT.		RAMP O (VETS PKWY NB)	EOP (GORE)	22+91.00		25+65.00	274.00	274.00	274.00	WHITE
							TOTAL =	10,132.75	10,132.75	10,132.75	
							USE =	10,133.00	10,133.00	10,133.00	
								FT	FT	FT	

MODEL: $MODELNAMES
FILE NAME: pw:\\ildot-pw.bentley.com:PWIDOT\Documents\IDOT Offices\District 5\Project\D570G08\CADData\CADsheets\D570G08-sht-Schedule.dgn

USER NAME = Greg.Eaglin	DESIGNED -	REVISED -
	DRAWN -	REVISED -
PLOT SCALE = 40.0000 ' / in.	CHECKED -	REVISED -
PLOT DATE = 1/25/2023	DATE -	REVISED -

STATE OF ILLINOIS
DEPARTMENT OF TRANSPORTATION

SCHEDULE OF QUANTITIES

SCALE: | SHEET 15 OF 17 SHEETS | STA. TO STA.

F.A.I. RTE.	SECTION	COUNTY	TOTAL SHEETS	SHEET NO.
74A	**	MCLEAN	93	36
		CONTRACT NO. 70G08		
	ILLINOIS	FED. AID PROJECT		

** (57-7)RS-3,(57-20)RS-4

SCHEDULE OF QUANTITIES

78000600 THERMOPLASTIC PAVEMENT MARKING - LINE 12"

78011065 GROOVING FOR RECESSED PAVEMENT MARKING 13"

70300261 TEPORARY PAVEMENT MARKING - LINE 12" - PAINT

LOCATION		STATION	TO	STATION	78000600 QUANTITY (FT)	78011065 QUANTITY (FT)	70300261 QUANTITY (FT)	COLOR
GORE	ROADWAY A (I-74 EB) ROADWAY G (I-55 SB)	602+95.00		608+17.00	321.0	321.0	321.0	WHITE
GORE	ROADWAY D (I-74 WB) ROADWAY H (I-55 NB)	606+84.00		610+96.20	186.0	186.0	186.0	WHITE
GORE	ROADWAY H (I-55 SB) ROADWAY L (VETS PKWY NB)	658+22.00		656+04.50	198.0	198.0	198.0	WHITE
				TOTAL =	705.0	705.0	705.0	
				USE =	705.0	705.0	705.0	
					FT	FT	FT	

78000100 THERMOPLASTIC PAVEMENT MARKING, LETTERS AND SYMBOLS

78011000 GROOVING FOR RECESSED PAVEMENT MARKING, LETTERS AND SYMBOLS

70300211 TEMPORARY PAVEMENT MARKINGS, LETTERS AND SYMBOLS - PAINT

LOCATION	STATION		STATION	OFFSET	SYMBOL	78000100 QUANTITY (SQ FT)	78011000 QUANTITY (SQ FT)	70300211 QUANTITY (SQ FT)
US 51 RAMP B	LT.		45+50.00	8.0	WRONG WAY ARROW	24.30	24.30	24.30
US 51 RAMP E	LT.		20+92.00	6.0	LT. TURN	15.60	15.60	15.60
US 51 RAMP E SPUR 130' S OF EOP	RT.		20+92.00	60.0	RT. TURN	15.60	15.60	15.60
US 51 RAMP E	LT.		19+25.00	9.0	WRONG WAY ARROW	24.30	24.30	24.30
ROADWAY D (I-74)	LT.	DL	613+50.00	6.0	LANE DROP ARROW	41.50	41.50	41.50
ROADWAY D (I-74)	LT.	DL	608+50.00	6.0	LANE DROP ARROW	41.50	41.50	41.50
					TOTAL =	162.80	162.80	162.80
					USE =	163.00	163.00	163.00
						SQ FT	SQ FT	SQ FT

78011125 GROOVING FOR RECESSED PAVEMENT MARKING 25"

70300281 TEMPORARY PAVEMENT MARKING - LINE 24" - PAINT

LOCATION			STATION	78000650 QUANTITY (FT)	78011125 QUANTITY (FT)	70300281 QUANTITY (FT)
US 51 RAMP E	STOP BAR	LT.	21+12.00	16.0	16.0	16.0
			TOTAL =	16.0	16.0	16.0
				FT	FT	FT

SCHEDULE OF QUANTITIES

GUARDRAIL SCHEDULE

LOCATION	STATION (+/-)	OFFSET FT (+/-)		STATION (+/-)	OFFSET FT (+/-)		63200310 GUARDRAIL REMOVAL (FT)	63000003 STEEL PLATE BEAM GUARDRAIL, TYPE A, 9 FT. POSTS (FT)	X6310188 TRAFFIC BARRIER TERMINAL, TYPE 6A MODIFIED (EACH)	63100167 TRAFFIC BARRIER TERMINAL TYPE 1 (SPECIAL) TANGENT (EACH)	72501000 TERMINAL MARKER DIRECT APPLIED (EACH)	78200005 GUARDRAIL REFLECTOR, TYPE A (EACH)
S.N. 057-0116	45+15.00	RT.	15.0	48+90.00	RT.	12.0	375.0					
(MORRIS AVE)	45+15.00	RT.	13.0	45+65.00	RT.	13.0				1.0	1.0	
	45+65.00	RT.	13.0	48+52.50	RT.	13.0		287.5				4.0
	48+52.50	RT.	13.0	48+90.00	RT.	12.0			1.0			
	51+11.50	RT.	12.0	57+11.50	RT.	15.0	600.0					
	51+11.50	RT.	12.0	51+49.00	RT.	13.0			1.0			
	51+49.00	RT.	13.0	56+61.50	RT.	13.0		512.5				7.0
	56+61.50	RT.	13.0	57+11.50	RT.	13.0				1.0	1.0	
	44+60.00	LT.	15.0	45+85.00	LT.	15.0	125.0					
	46+15.00	LT.	15.0	48+90.00	LT.	12.0	275.0					
	44+60.00	LT.	13.0	45+10.00	LT.	13.0				1.0	1.0	
	45+10.00	LT.	13.0	45+35.00	LT.	13.0		25.0				2.0
	45+35.00	LT.	13.0	45+85.00	LT.	13.0				1.0	1.0	
	46+15.00	LT.	13.0	46+65.00	LT.	13.0				1.0	1.0	
	46+65.00	LT.	13.0	48+52.50	LT.	13.0		187.5				4.0
	48+52.50	LT.	13.0	48+90.00	LT.	12.0			1.0			
	51+11.50	LT.	12.0	57+11.50	LT.	15.0	600.0					
	51+11.50	LT.	12.0	51+49.00	LT.	13.0			1.0			
	51+49.00	LT.	13.0	56+61.50	LT.	13.0		512.5				7.0
	56+61.50	LT.	13.0	57+11.50	LT.	13.0				1.0	1.0	
					TOTAL =		1,975.0	1,525.0	4.0	6.0	6.0	24.0
							(FT)	(FT)	(EACH)	(EACH)	(EACH)	(EACH)

NOTES:
GUARDRAIL POSTS TO BE DRIVEN INTO EXISTING AGGREGATE SHOULDER AND / OR EARTH EMBANKMENT.

THE PROPOSED GUARDRAIL SHALL BE INSTALLED AT A 13.0 FT OFFSET FROM CENTERLINE EXCEPT AT THE TRAFFIC BARRIER TERMINAL TYPE 6A MODIFIED WHERE IT WILL TAPER FROM 13.0 OFFSET TO THE EXISTING BRIDGE RAIL OFFSET.

EARTHWORK AND SEEDING SCHEDULE (S.N. 057-0116)

LOCATION			STATION	TO	STATION	20400800 FURNISHED EXCAVATION (CU YD)	25000210 SEEDING, CLASSS 2A (ACRE)	25000400 NITROGEN FERTILIZER NUTRIENT (LB)	25000500 PHOSPHORUS FERTILIZER NUTRIENT (LB)	25000600 POTASSIUM FERTILIZER NUTRIENT (LB)	25100115 MULCH METHOD 2 (ACRE)
S.B.	RT.	SHOULDER	44+80.90		45+63.90	10.0	0.02	1.8	1.8	1.8	0.02
S.B.	RT.	SHOULDER	56+62.80		57+45.80	10.0	0.02	1.8	1.8	1.8	0.02
N.B.	LT.	SHOULDER	44+25.90		45+08.90	10.0	0.02	1.8	1.8	1.8	0.02
N.B.	LT.	SHOULDER	45+35.90		45+94.90	5.0	0.01	0.9	0.9	0.9	0.01
N.B.	LT.	SHOULDER	46+04.90		46+63.90	5.0	0.01	0.9	0.9	0.9	0.01
N.B.	LT.	SHOULDER	56+62.80		57+45.80	10.0	0.02	1.8	1.8	1.8	0.02
					TOTAL =	50.0	0.10	9.0	9.0	9.0	0.10
					USE =	50.0	0.25	10.0	10.0	10.0	0.25
						(CU YD)	(ACRE)	(LB)	(LB)	(LB)	(ACRE)

NOTE:
AT TRAFFIC BARRIER TERMINALS TYPE 1 (SPECIAL) TANGENT, FURNISHED EXCAVATION SHALL BE CONSTRUCTED PER HIGHWAY STANDARD 630301 AND SEEDING, FERTILIZER, & MULCH SHALL BE PLACED ON THE DISTURBED SOIL.

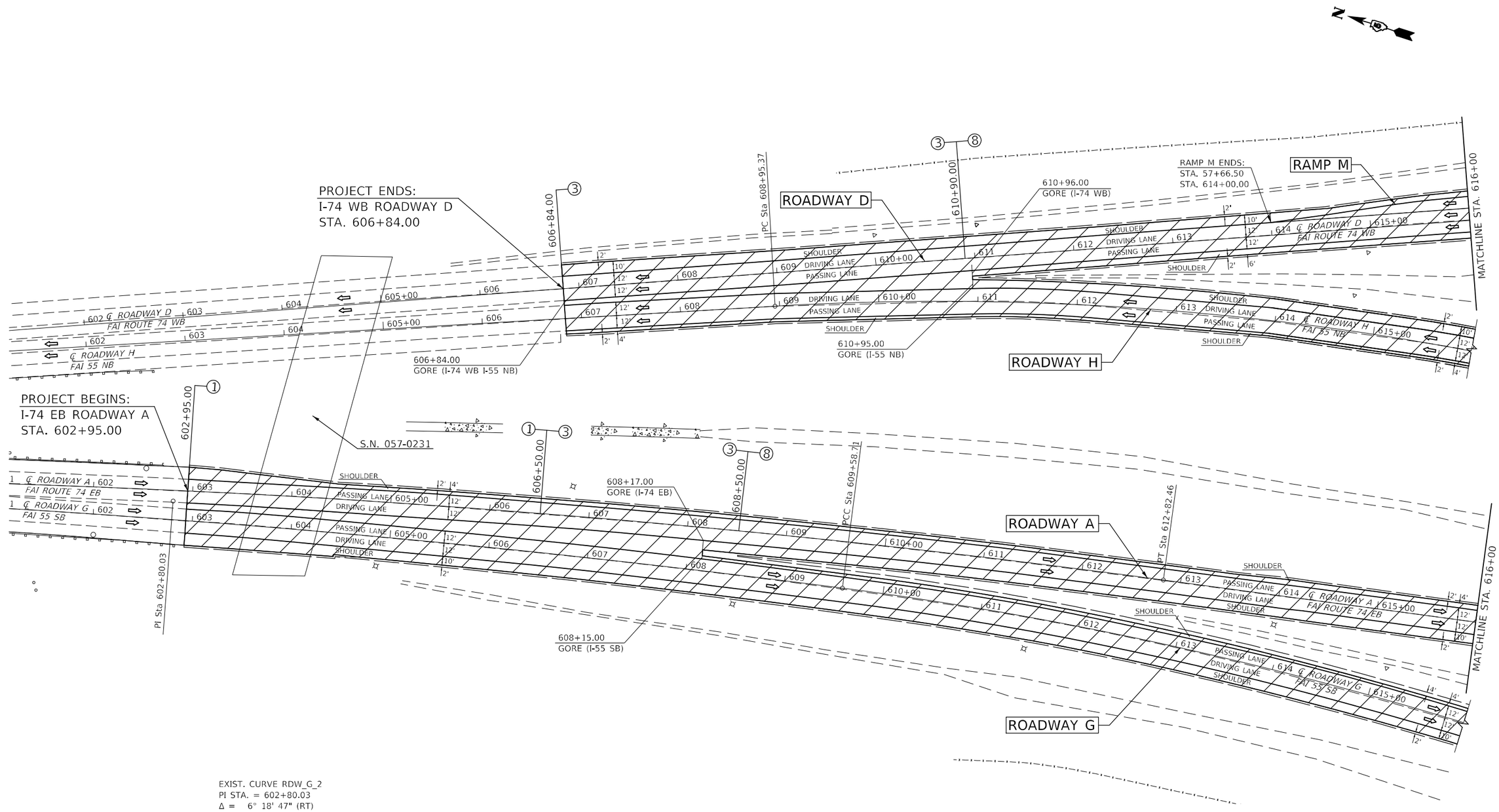

EXIST. CURVE RDW_G_2
PI STA. = 602+80.03
Δ = 6° 18' 47" (RT)
D = 0° 27' 53"
R = 12,331.68'
T = 680.06'
L = 1,358.74'
E = 18.74'
e = ____
T.R. = ____
S.E. RUN = ____
P.C. STA. = 595+99.98
P.T. STA. = 609+58.71

HOT-MIX ASPHALT
SURFACE REMOVAL, 2"

MODEL: $MODEL NAMES
FILE NAME: pw:\\ildot-pw.bentley.com:PWIDOT\Documents\IDOT Offices\District 5\Projects\D570G08\CADData\CADsheets\D570G08-sht-plan.dgn

USER NAME = Greg.Eaglin	DESIGNED -	REVISED -
	DRAWN -	REVISED -
PLOT SCALE = 100.0000 ' / in.	CHECKED -	REVISED -
PLOT DATE = 1/25/2023	DATE -	REVISED -

STATE OF ILLINOIS
DEPARTMENT OF TRANSPORTATION

FAI – 74
ROADWAY A (EB) & ROADWAY D (WB)

SCALE: | SHEET 1 OF 21 SHEETS | STA. 602+00.00 A TO STA. 616+00.00 A

F.A.I. RTE.	SECTION	COUNTY	TOTAL SHEETS	SHEET NO.
74A	**	MCLEAN	93	39
** (57-7)RS-3,(57-20)RS-4		CONTRACT NO. 70G08		
		ILLINOIS	FED. AID PROJECT	

EXIST. CURVE RDW_H_3
PI STA. = 619+20.20
Δ = 39° 22' 04" (RT)
D = 2° 00' 00"
R = 2,864.78'
T = 1,024.83'
L = 1,968.38'
E = 177.79'
e = ____
T.R. = ____
S.E. RUN = ____
P.C. STA. = 608+95.37
P.T. STA. = 628+63.75

EXIST. CURVE RAMP_M_6
PI STA. = 48+79.23
Δ = 22° 10' 14" (RT)
D = 8° 10' 19"
R = 701.12'
T = 137.37'
L = 271.30'
E = 13.33'
e = ____
T.R. = ____
S.E. RUN = ____
P.C. STA. = 47+41.86
P.T. STA. = 50+13.16

EXIST. CURVE RAMP_E_4
PI STA. = 28+55.07
Δ = 24° 20' 48" (LT)
D = 16° 59' 56"
R = 337.06'
T = 72.71'
L = 143.23'
E = 7.75'
e = ____
T.R. = ____
S.E. RUN = ____
P.C. STA. = 27+82.36
P.T. STA. = 29+25.58

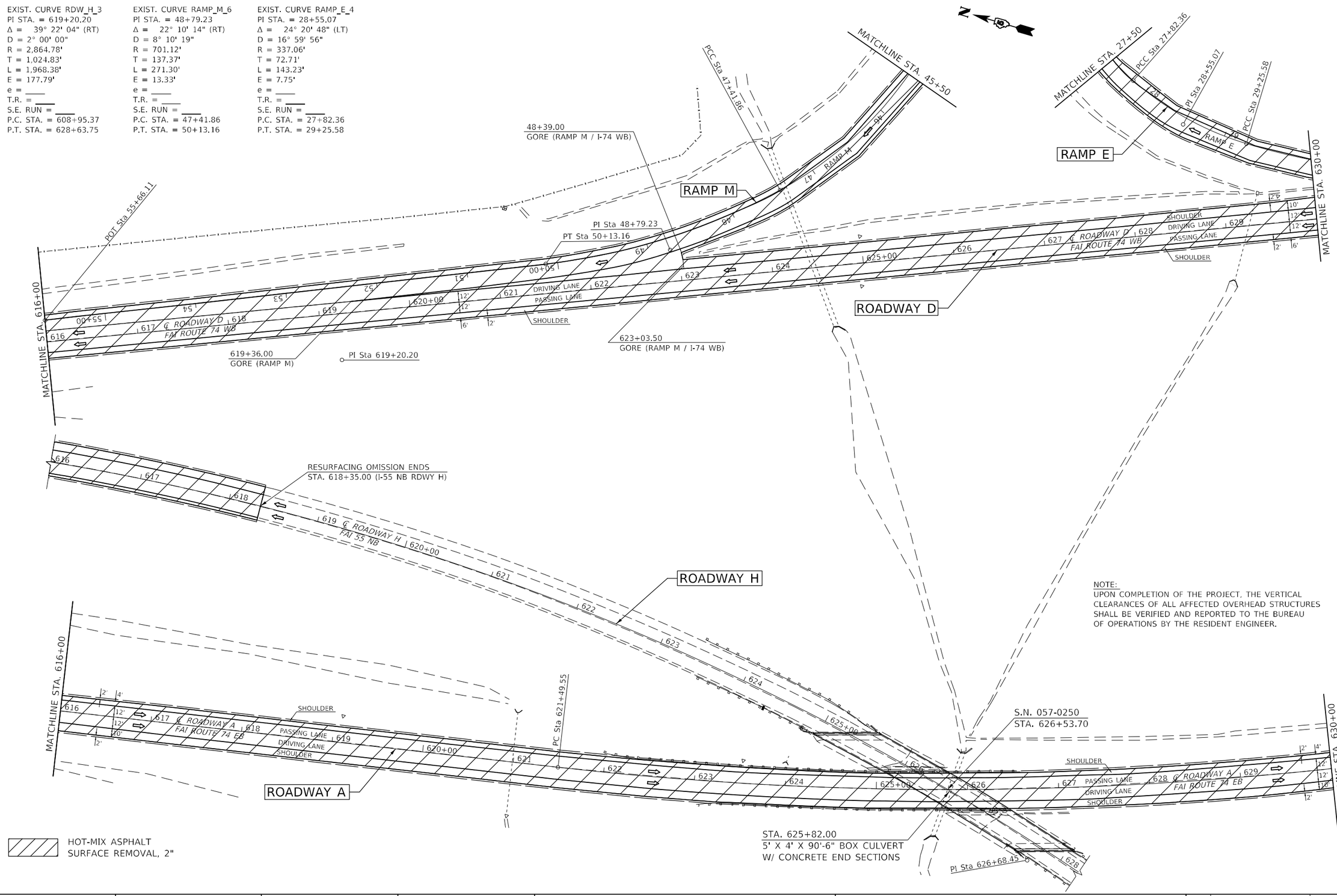

USER NAME = Greg.Eaglin	DESIGNED -	REVISED -	
	DRAWN -	REVISED -	
PLOT SCALE = 100.0000 ' / in.	CHECKED -	REVISED -	
PLOT DATE = 1/25/2023	DATE -	REVISED -	

STATE OF ILLINOIS
DEPARTMENT OF TRANSPORTATION

FAI – 74
ROADWAY A (EB) & ROADWAY D (WB)

SCALE: | SHEET 2 OF 21 SHEETS | STA. 616+00.00 A TO STA. 630+00.00 A

F.A.I. RTE.	SECTION	COUNTY	TOTAL SHEETS	SHEET NO.
74A	**	MCLEAN	93	40
** (57-7)RS-3,(57-20)RS-4		CONTRACT NO. 70G08		
		ILLINOIS	FED. AID PROJECT	

MODEL: $MODEL NAMES
FILE NAME: pw:\\ildot-pw.bentley.com:PWIDOT\Documents\IDOT Offices\District 5\Projects\D570G08\CADData\CADsheets\D570G08-sht-plan.dgn

EXIST. CURVE RAMP_E_5
PI STA. = 30+26.00
Δ = 16° 52' 04" (LT)
D = 8° 27' 37"
R = 677.23'
T = 100.41'
L = 199.37'
E = 7.40'
e = ____
T.R. = ____
S.E. RUN = ____
P.C. STA. = 29+25.58
P.T. STA. = 31+24.96

EXIST. CURVE RAMP_F_3
PI STA. = 22+62.09
Δ = 55° 46' 30" (RT)
D = 13° 36' 21"
R = 421.11'
T = 222.85'
L = 409.94'
E = 55.33'
e = ____
T.R. = ____
S.E. RUN = ____
P.C. STA. = 20+39.24
P.T. STA. = 24+49.18

EXIST. CURVE RAMP_E_6
PI STA. = 34+14.30
Δ = 5° 22' 07" (LT)
D = 0° 55' 42"
R = 6,171.57'
T = 289.35'
L = 578.27'
E = 6.78'
e = ____
T.R. = ____
S.E. RUN = ____
P.C. STA. = 31+24.96
P.T. STA. = 37+03.22

NOTE:
UPON COMPLETION OF THE PROJECT, THE VERTICAL CLEARANCES OF ALL AFFECTED OVERHEAD STRUCTURES SHALL BE VERIFIED AND REPORTED TO THE BUREAU OF OPERATIONS BY THE RESIDENT ENGINEER.

EXIST. CURVE REL66_6
PI STA. = 54+79.31
Δ = 72° 26' 50" (RT)
D = 2° 29' 57"
R = 2,292.48'
T = 1,679.29'
L = 2,898.71'
E = 549.26'
e = ____
T.R. = ____
S.E. RUN = ____
P.C. STA. = 38+00.02
P.T. STA. = 66+98.73

EXIST. CURVE RAMP_J_1
PI STA. = 0+96.68
Δ = 18° 16' 45" (RT)
D = 9° 32' 06"
R = 600.90'
T = 96.68'
L = 191.71'
E = 7.73'
e = ____
T.R. = ____
S.E. RUN = ____
P.C. STA. = 0+00.00
P.T. STA. = 1+91.71

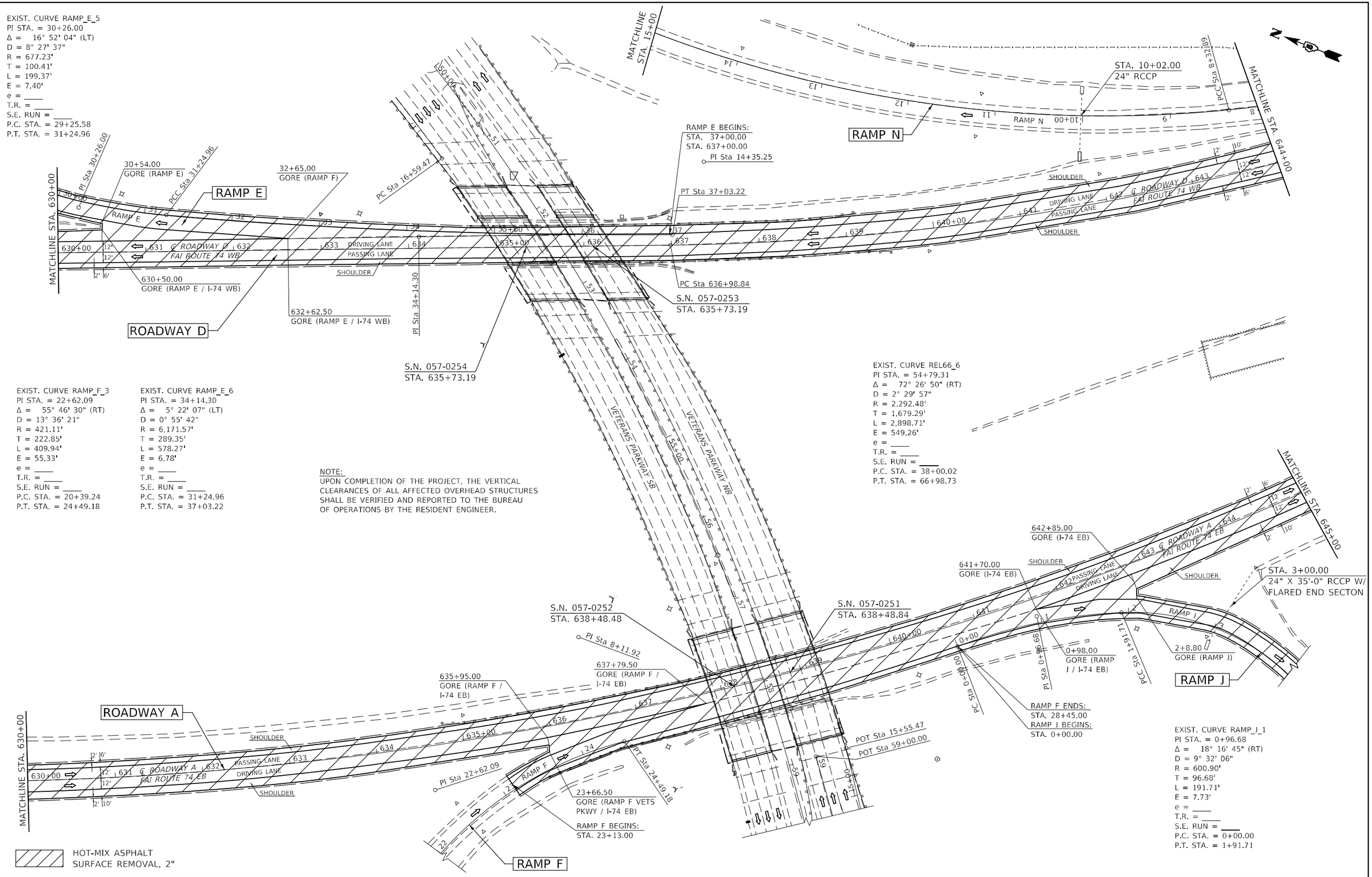

USER NAME = Greg.Eaglin	DESIGNED -	REVISED -	
	DRAWN -	REVISED -	
PLOT SCALE = 100.0000 ' / in.	CHECKED -	REVISED -	
PLOT DATE = 1/25/2023	DATE -	REVISED -	

STATE OF ILLINOIS
DEPARTMENT OF TRANSPORTATION

FAI – 74
ROADWAY A (EB) & ROADWAY D (WB)

SCALE: | SHEET 3 OF 21 SHEETS | STA. 630+00.00 A TO STA. 645+00.00 A

F.A.I. RTE.	SECTION	COUNTY	TOTAL SHEETS	SHEET NO.
74A	**	MCLEAN	93	41
** (57-7)RS-3,(57-20)RS-4		CONTRACT NO. 70G08		
		ILLINOIS	FED. AID PROJECT	

MODEL: $MODEL NAMES
FILE NAME: pw:\\ildot-pw.bentley.com:PWIDOT\Documents\IDOT Offices\District 5\Projects\D570G08\CADData\CAD\Feet\D570G08-sht-plan.dgn

EXIST. CURVE RAMP_N_1
PI STA. = 4+23.31
Δ = 25° 14' 18" (RT)
D = 3° 01' 49"
R = 1,890.83'
T = 423.31'
L = 832.89'
E = 46.81'
e = ____
T.R. = ____
S.E. RUN = ____
P.C. STA. = 0+00.00
P.T. STA. = 8+32.89

EXIST. CURVE RDW_D_3
PI STA. = 655+60.43
Δ = 66° 00' 34" (LT)
D = 1° 59' 57"
R = 2,866.07'
T = 1,861.59'
L = 3,301.95'
E = 551.51'
e = ____
T.R. = ____
S.E. RUN = ____
P.C. STA. = 636+98.84
P.T. STA. = 670+00.79

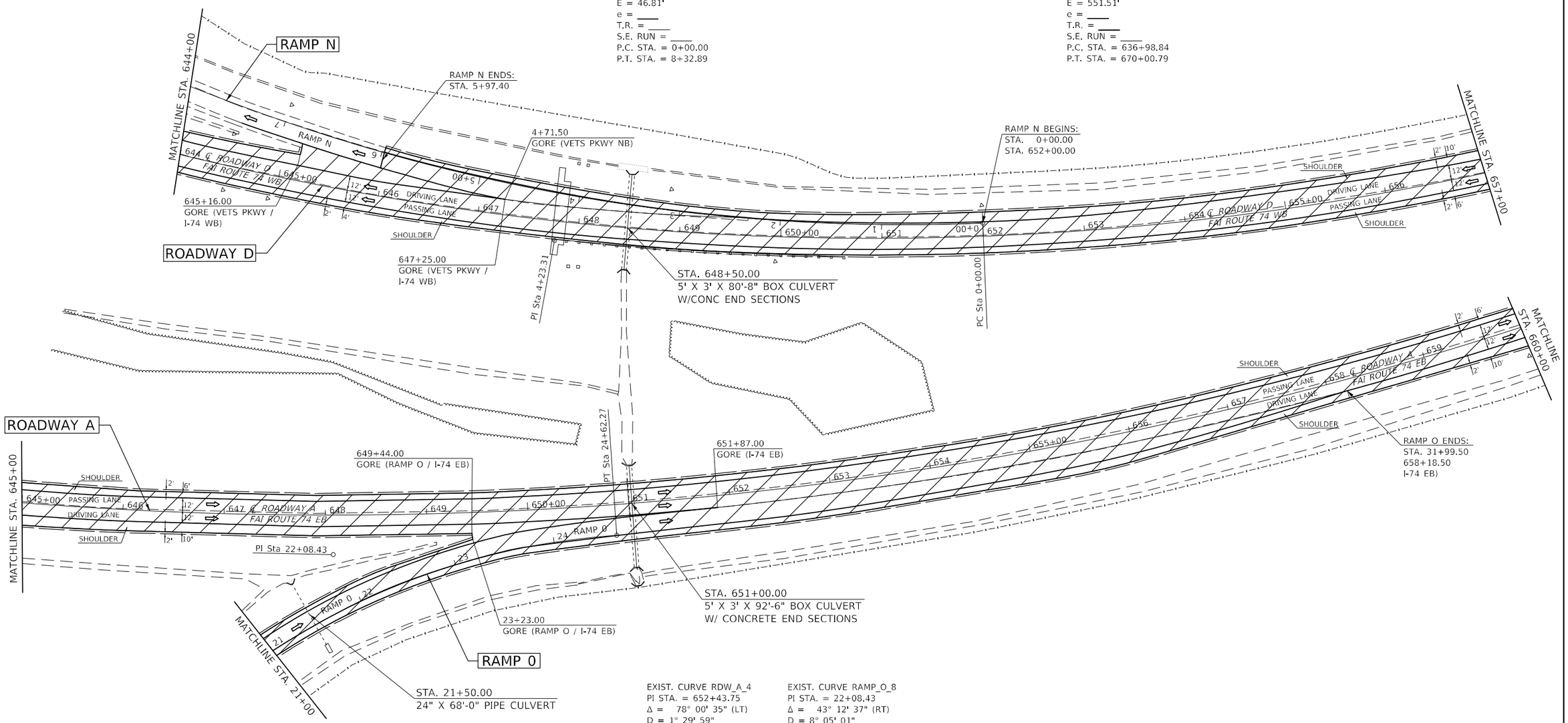

EXIST. CURVE RDW_A_4
PI STA. = 652+43.75
Δ = 78° 00' 35" (LT)
D = 1° 29' 59"
R = 3,820.35'
T = 3,094.20'
L = 5,201.51'
E = 1,095.86'
e = ____
T.R. = ____
S.E. RUN = ____
P.C. STA. = 621+49.55
P.T. STA. = 673+51.06

EXIST. CURVE RAMP_O_8
PI STA. = 22+08.43
Δ = 43° 12' 37" (RT)
D = 8° 05' 01"
R = 708.78'
T = 280.70'
L = 534.54'
E = 53.56'
e = ____
T.R. = ____
S.E. RUN = ____
P.C. STA. = 19+27.73
P.T. STA. = 24+62.27

HOT-MIX ASPHALT
SURFACE REMOVAL, 2"

MODEL: SMODELNAME5
FILE NAME: pw:\\ildot-pw.bentley.com:PWIDOT\Documents\IDOT Offices\District 5\Projects\D570G08\CADData\CADsheets\D570G08-sht-plan.dgn

USER NAME = Greg.Eaglin	DESIGNED -	REVISED -	
	DRAWN -	REVISED -	
PLOT SCALE = 100.0000 ' / in.	CHECKED -	REVISED -	
PLOT DATE = 1/25/2023	DATE -	REVISED -	

STATE OF ILLINOIS
DEPARTMENT OF TRANSPORTATION

FAI – 74
ROADWAY A (EB) & ROADWAY D (WB)

SCALE: | SHEET 4 OF 21 SHEETS | STA. 644+00.00 A TO STA. 660+00.00 A

F.A.I. RTE.	SECTION	COUNTY	TOTAL SHEETS	SHEET NO.
74A	**	MCLEAN	93	42
** (57-7)RS-3,(57-20)RS-4		CONTRACT NO. 70G08		
		ILLINOIS FED. AID PROJECT		

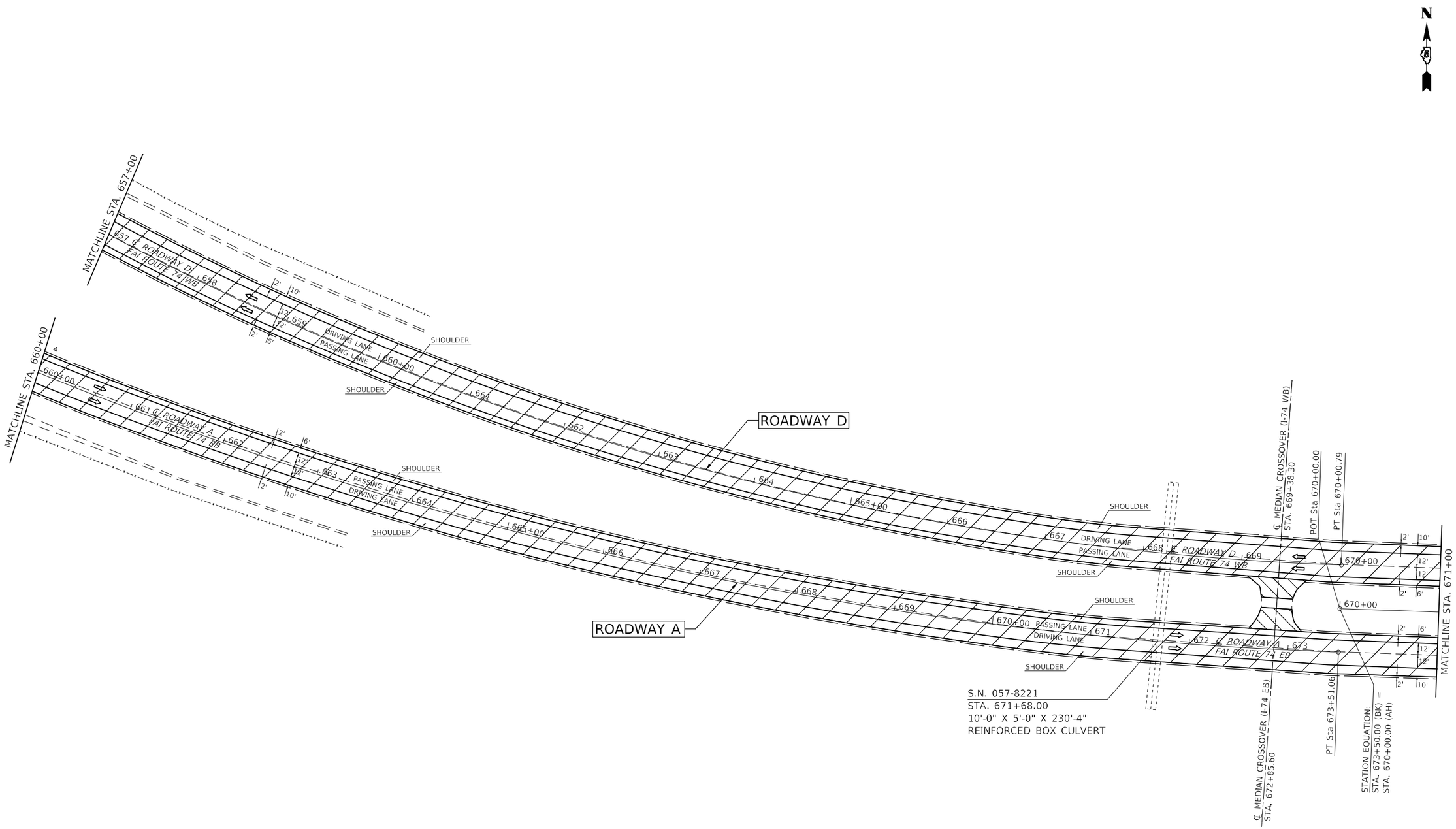

MODEL: $MODELNAMES
FILE NAME: pw:\\ildot-pw.bentley.com:PWIDOT\Documents\IDOT Offices\District 5\Projects\D570G08\CADData\CAD\Feets\D570G08-sht-plan.dgn

USER NAME = Greg.Eaglin	DESIGNED -	REVISED -	
	DRAWN -	REVISED -	
PLOT SCALE = 100.0000 ' / in.	CHECKED -	REVISED -	
PLOT DATE = 1/25/2023	DATE -	REVISED -	

STATE OF ILLINOIS
DEPARTMENT OF TRANSPORTATION

FAI – 74
ROADWAY A (EB) & ROADWAY D (WB)

SCALE: | SHEET 5 OF 21 SHEETS | STA. 660+00.00 A TO STA. 671+00.00 A

F.A.I. RTE.	SECTION	COUNTY	TOTAL SHEETS	SHEET NO.
74A	**	MCLEAN	93	43
** (57-7)RS-3,(57-20)RS-4		CONTRACT NO. 70G08		
		ILLINOIS	FED. AID PROJECT	

NOTE:
SEE SHEET 91 FOR GUARDRAIL
DETAIL FOR MORRIS AVE.

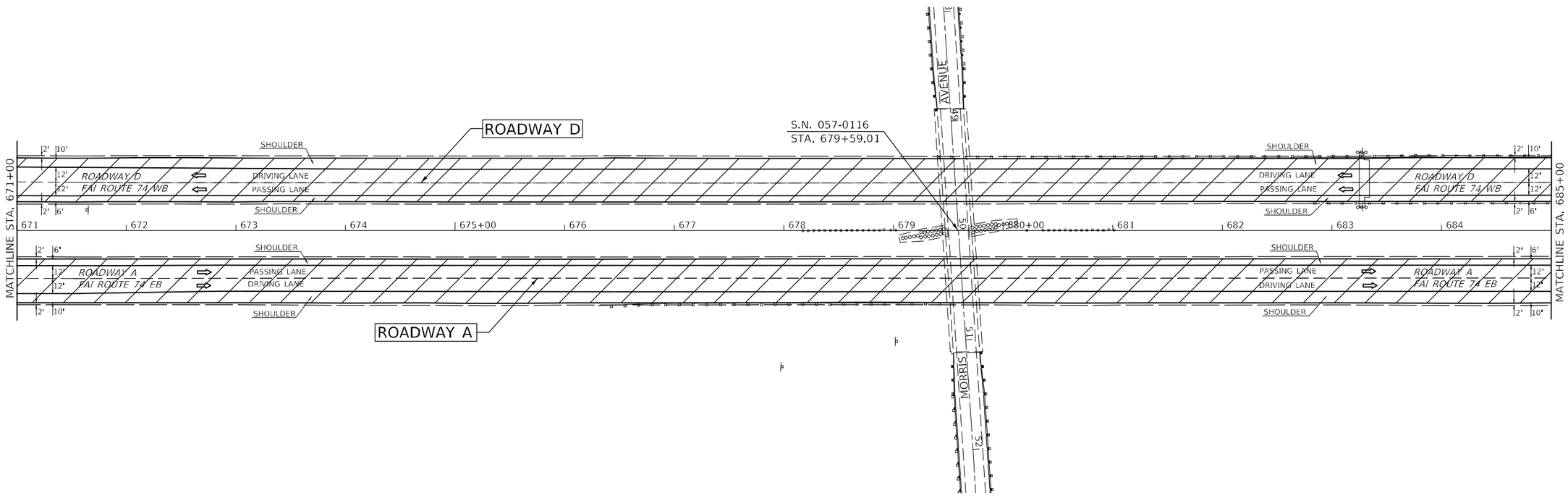

HOT-MIX ASPHALT
SURFACE REMOVAL, 2"

MODEL: $MODELNAME
FILE NAME: pw:\\ildot-pw.bentley.com:PWIDOT\Documents\IDOT Offices\District 5\Projects\D570G08\CADData\CAD\Sheets\D570G08-sht-plan.dgn

USER NAME = Greg.Eaglin	DESIGNED -	REVISED -	
	DRAWN -	REVISED -	
PLOT SCALE = 100.0000 ' / in.	CHECKED -	REVISED -	
PLOT DATE = 1/25/2023	DATE -	REVISED -	

STATE OF ILLINOIS
DEPARTMENT OF TRANSPORTATION

FAI – 74
ROADWAY A (EB) & ROADWAY D (WB)

SCALE: | SHEET 6 OF 21 SHEETS | STA. 671+00.00 TO STA. 685+00.00 A

F.A.I. RTE.	SECTION	COUNTY	TOTAL SHEETS	SHEET NO.
74A	**	MCLEAN	93	44
** (57-7)RS-3,(57-20)RS-4		CONTRACT NO. 70G08		
	ILLINOIS	FED. AID PROJECT		

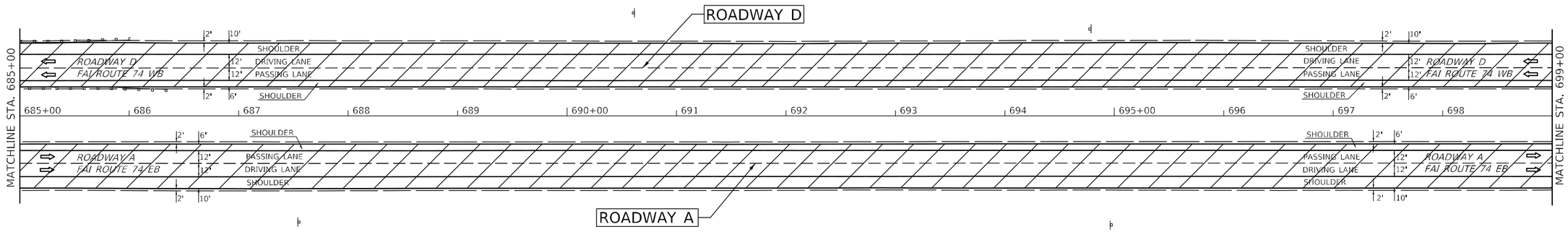

HOT-MIX ASPHALT
SURFACE REMOVAL, 2"

MODEL: $MODELNAME$
FILE NAME: pw:\\ildot-pw.bentley.com:PWIDOT\Documents\IDOT Offices\District 5\Projects\D570G08\CADData\CADsheets\D570G08-sht-plan.dgn

USER NAME = Greg.Eaglin	DESIGNED -	REVISED -	
	DRAWN -	REVISED -	
PLOT SCALE = 100.0000 ' / in.	CHECKED -	REVISED -	
PLOT DATE = 1/25/2023	DATE -	REVISED -	

STATE OF ILLINOIS
DEPARTMENT OF TRANSPORTATION

FAI–74
ROADWAY A (EB) & ROADWAY D (WB)

SCALE: | SHEET 7 OF 21 SHEETS | STA. 685+00.00 TO STA. 699+00.00 A

F.A.I. RTE.	SECTION	COUNTY	TOTAL SHEETS	SHEET NO.
74A	**	MCLEAN	93	45
** (57-7)RS-3,(57-20)RS-4		CONTRACT NO. 70G08		
		ILLINOIS	FED. AID PROJECT	

EXIST. CURVE 51RMPE_3
PI STA. = 11+56.94
Δ = 42° 51' 03" (RT)
D = 8° 27' 29"
R = 677.42'
T = 265.83'
L = 506.64'
E = 50.29'
e = ____
T.R. = ____
S.E. RUN = ____
P.C. STA. = 8+91.12
P.T. STA. = 13+97.75

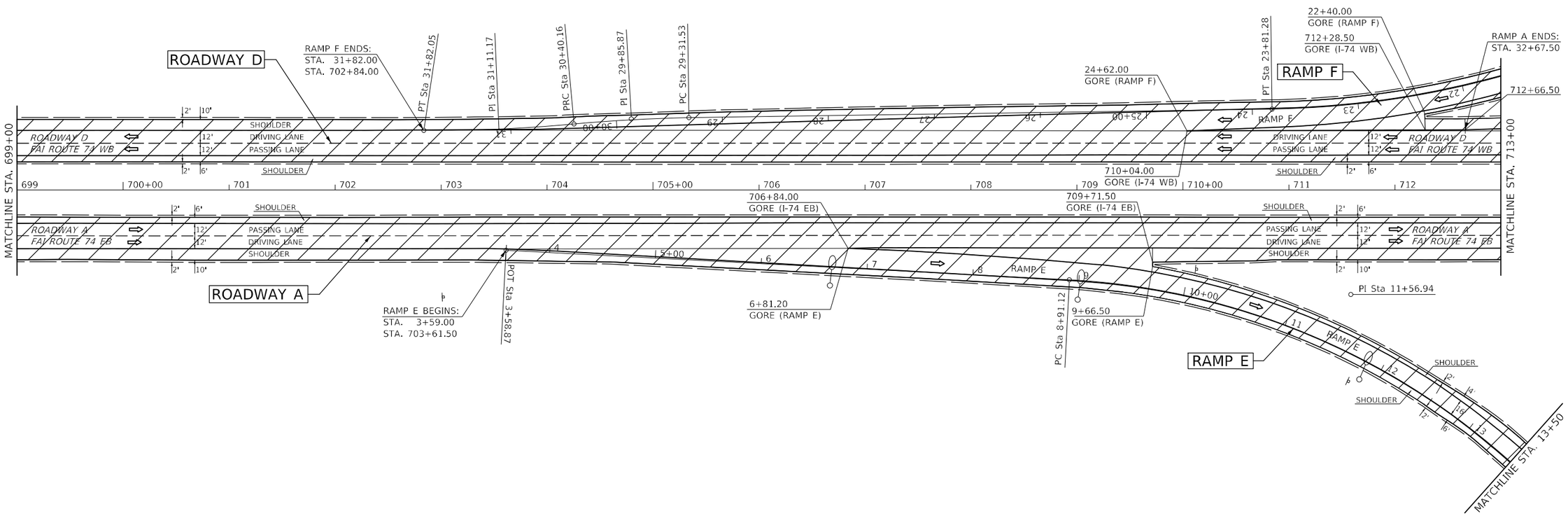

EXIST. CURVE 51RMPF_10
PI STA. = 31+11.17
Δ = 5° 51' 01" (RT)
D = 4° 07' 23"
R = 1,389.60'
T = 71.01'
L = 141.89'
E = 1.81'
e = ____
T.R. = ____
S.E. RUN = ____
P.C. STA. = 30+40.16
P.T. STA. = 31+82.05

EXIST. CURVE 51RMPF_9
PI STA. = 29+85.87
Δ = 4° 06' 35" (LT)
D = 3° 46' 59"
R = 1,514.49'
T = 54.34'
L = 108.63'
E = 0.97'
e = ____
T.R. = ____
S.E. RUN = ____
P.C. STA. = 29+31.53
P.T. STA. = 30+40.16

HOT-MIX ASPHALT
SURFACE REMOVAL, 2"

MODEL: $MODEL NAMES
FILE NAME: pw:\\ildot-pw.bentley.com:PWIDOT\Documents\IDOT Offices\District 5\Projects\D570G08\CADData\CAD\Sheets\D570G08-sht-plan.dgn

USER NAME = Greg.Eaglin	DESIGNED -	REVISED -	
	DRAWN -	REVISED -	
PLOT SCALE = 100.0000 ' / in.	CHECKED -	REVISED -	
PLOT DATE = 1/25/2023	DATE -	REVISED -	

STATE OF ILLINOIS
DEPARTMENT OF TRANSPORTATION

FAI – 74
ROADWAY A (EB) & ROADWAY D (WB)

SCALE: | SHEET 8 OF 21 SHEETS | STA. 699+00.00 TO STA. 713+00.00 A

F.A.I. RTE.	SECTION	COUNTY	TOTAL SHEETS	SHEET NO.
74A	**	MCLEAN	93	46
** (57-7)RS-3,(57-20)RS-4		CONTRACT NO. 70G08		
		ILLINOIS	FED. AID PROJECT	

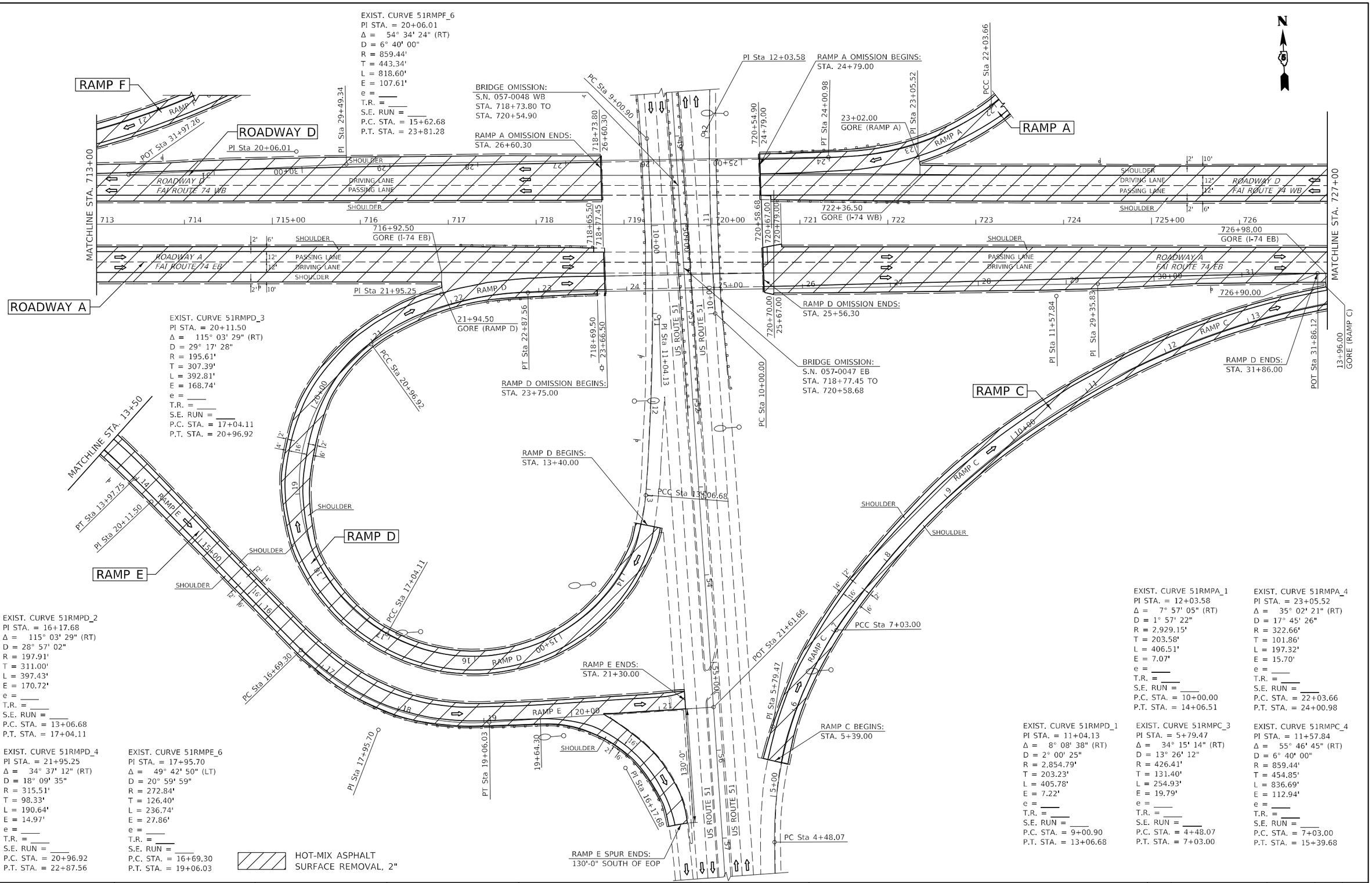

USER NAME = Greg.Eaglin	DESIGNED -	REVISED -
	DRAWN -	REVISED -
PLOT SCALE = 100.0000 ' / in.	CHECKED -	REVISED -
PLOT DATE = 1/25/2023	DATE -	REVISED -

STATE OF ILLINOIS
DEPARTMENT OF TRANSPORTATION

FAI – 74 ROADWAY A (EB) & ROADWAY D (WB) AND RAMP C, D, E, AT US RTE. 51

SCALE: | SHEET 9 OF 21 SHEETS | STA. 713+00.00 TO STA. 727+00.00 A

F.A.I. RTE.	SECTION	COUNTY	TOTAL SHEETS	SHEET NO.
74A	**	MCLEAN	93	47
** (57-7)RS-3,(57-20)RS-4		CONTRACT NO. 70G08		
		ILLINOIS FED. AID PROJECT		

MODEL: $MODELNAME
FILE NAME: pw:\\ildot-pw.bentley.com:PWIDOT\Documents\IDOT Offices\District 5\Project\D570G08\CADData\CAD sheets\D570G08-sht-plan.dgn

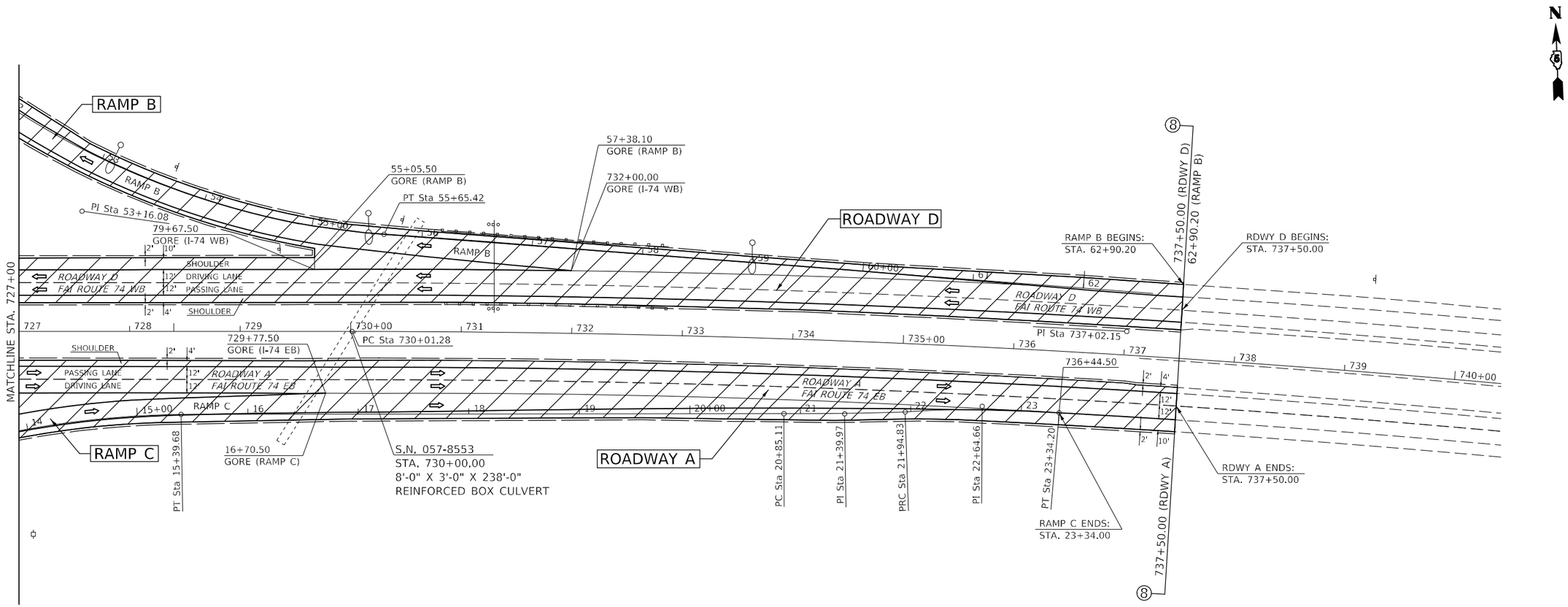

EXIST. CURVE 51RMPB_6
PI STA. = 53+16.08
Δ = 41° 51' 46" (LT)
D = 8° 00' 00"
R = 716.20'
T = 273.94'
L = 523.29'
E = 50.60'
e = ____
T.R. = ____
S.E. RUN = ____
P.C. STA. = 50+42.14
P.T. STA. = 55+65.42

EXIST. CURVE 51RMPC_7
PI STA. = 21+39.97
Δ = 2° 05' 49" (LT)
D = 1° 54' 41"
R = 2,997.77'
T = 54.86'
L = 109.72'
E = 0.50'
e = ____
T.R. = ____
S.E. RUN = ____
P.C. STA. = 20+85.11
P.T. STA. = 21+94.83

EXIST. CURVE 51RMPC_8
PI STA. = 22+64.66
Δ = 9° 00' 16" (RT)
D = 6° 27' 37"
R = 886.88'
T = 69.83'
L = 139.38'
E = 2.75'
e = ____
T.R. = ____
S.E. RUN = ____
P.C. STA. = 21+94.83
P.T. STA. = 23+34.20

EXIST. CURVE I74_EAST_3
PI STA. = 737+02.15
Δ = 6° 58' 53" (RT)
D = 0° 29' 55"
R = 11,489.93'
T = 700.87'
L = 1,400.01'
E = 21.36'
e = ____
T.R. = ____
S.E. RUN = ____
P.C. STA. = 730+01.28
P.T. STA. = 744+01.28

HOT-MIX ASPHALT
SURFACE REMOVAL, 2"

MODEL: $MODEL$NAME$
FILE NAME: pw:\\ildot-pw.bentley.com:PWIDOT\Documents\IDOT Offices\District 5\Projects\D570G08\CADData\CADSheets\D570G08-sht-plan.dgn

USER NAME = Greg.Eaglin	DESIGNED -	REVISED -	
	DRAWN -	REVISED -	
PLOT SCALE = 100.0000 ' / in.	CHECKED -	REVISED -	
PLOT DATE = 1/25/2023	DATE -	REVISED -	

STATE OF ILLINOIS
DEPARTMENT OF TRANSPORTATION

FAI – 74
ROADWAY A (EB) & ROADWAY D (WB)

SCALE: | SHEET 10 OF 21 SHEETS | STA. 727+00.00 TO STA. 737+00.00 A

F.A.I. RTE.	SECTION	COUNTY	TOTAL SHEETS	SHEET NO.
74A	**	MCLEAN	93	48
	** (57-7)RS-3,(57-20)RS-4	CONTRACT NO. 70G08		
		ILLINOIS	FED. AID PROJECT	

NOTE:
UPON COMPLETION OF THE PROJECT, THE VERTICAL CLEARANCES OF ALL AFFECTED OVERHEAD STRUCTURES SHALL BE VERIFIED AND REPORTED TO THE BUREAU OF OPERATIONS BY THE RESIDENT ENGINEER.

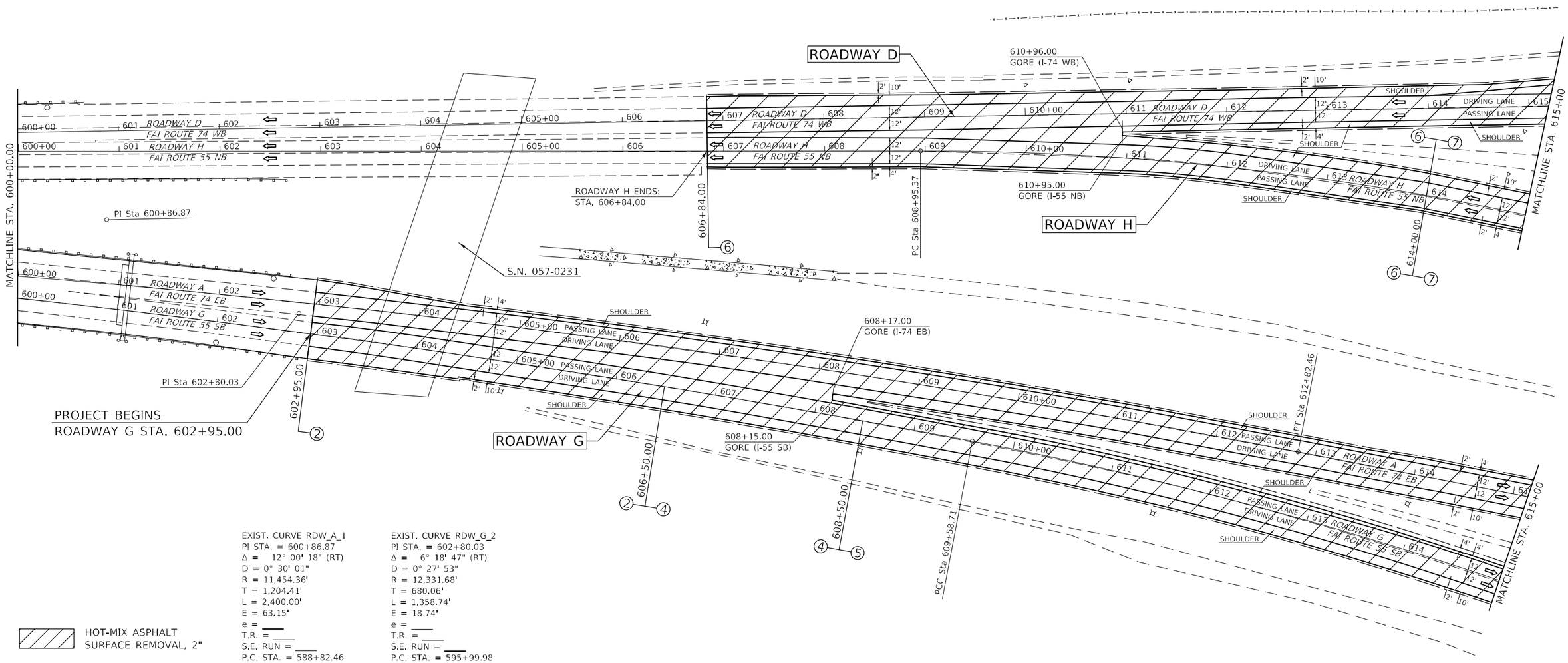

EXIST. CURVE RDW_A_1
PI STA. = 600+86.87
Δ = 12° 00' 18" (RT)
D = 0° 30' 01"
R = 11,454.36'
T = 1,204.41'
L = 2,400.00'
E = 63.15'
e = ____
T.R. = ____
S.E. RUN = ____
P.C. STA. = 588+82.46
P.T. STA. = 612+82.46

EXIST. CURVE RDW_G_2
PI STA. = 602+80.03
Δ = 6° 18' 47" (RT)
D = 0° 27' 53"
R = 12,331.68'
T = 680.06'
L = 1,358.74'
E = 18.74'
e = ____
T.R. = ____
S.E. RUN = ____
P.C. STA. = 595+99.98
P.T. STA. = 609+58.71

HOT-MIX ASPHALT SURFACE REMOVAL, 2"

MODEL: SMODELNAME5
FILE NAME: pw:\\ildot-pw.bentley.com:PWIDOT\Documents\IDOT Offices\District 5\Projects\D570G08\CADData\CADsheets\D570G08-sht-plan.dgn

USER NAME = Greg.Eaglin	DESIGNED -	REVISED -	
	DRAWN -	REVISED -	
PLOT SCALE = 100.0000 ' / in.	CHECKED -	REVISED -	
PLOT DATE = 1/25/2023	DATE -	REVISED -	

STATE OF ILLINOIS
DEPARTMENT OF TRANSPORTATION

FAI – 55
ROADWAY G (SB) & ROADWAY H (NB)

SCALE: 1" = 50' | SHEET 11 OF 21 SHEETS | STA. 600+00.00 TO STA. 615+00.00 G

F.A.I. RTE.	SECTION	COUNTY	TOTAL SHEETS	SHEET NO.
74A	**	MCLEAN	93	49
** (57-7)RS-3,(57-20)RS-4		CONTRACT NO. 70G08		
		ILLINOIS FED. AID PROJECT		

EXIST. CURVE RDW_H_3
PI STA. = 619+20.20
Δ = 39° 22' 04" (RT)
D = 2° 00' 00"
R = 2,864.78'
T = 1,024.83'
L = 1,968.38'
E = 177.79'
e = ____
T.R. = ____
S.E. RUN = ____
P.C. STA. = 608+95.37
P.T. STA. = 628+63.75

NOTE:
UPON COMPLETION OF THE PROJECT, THE VERTICAL CLEARANCES OF ALL AFFECTED OVERHEAD STRUCTURES SHALL BE VERIFIED AND REPORTED TO THE BUREAU OF OPERATIONS BY THE RESIDENT ENGINEER.

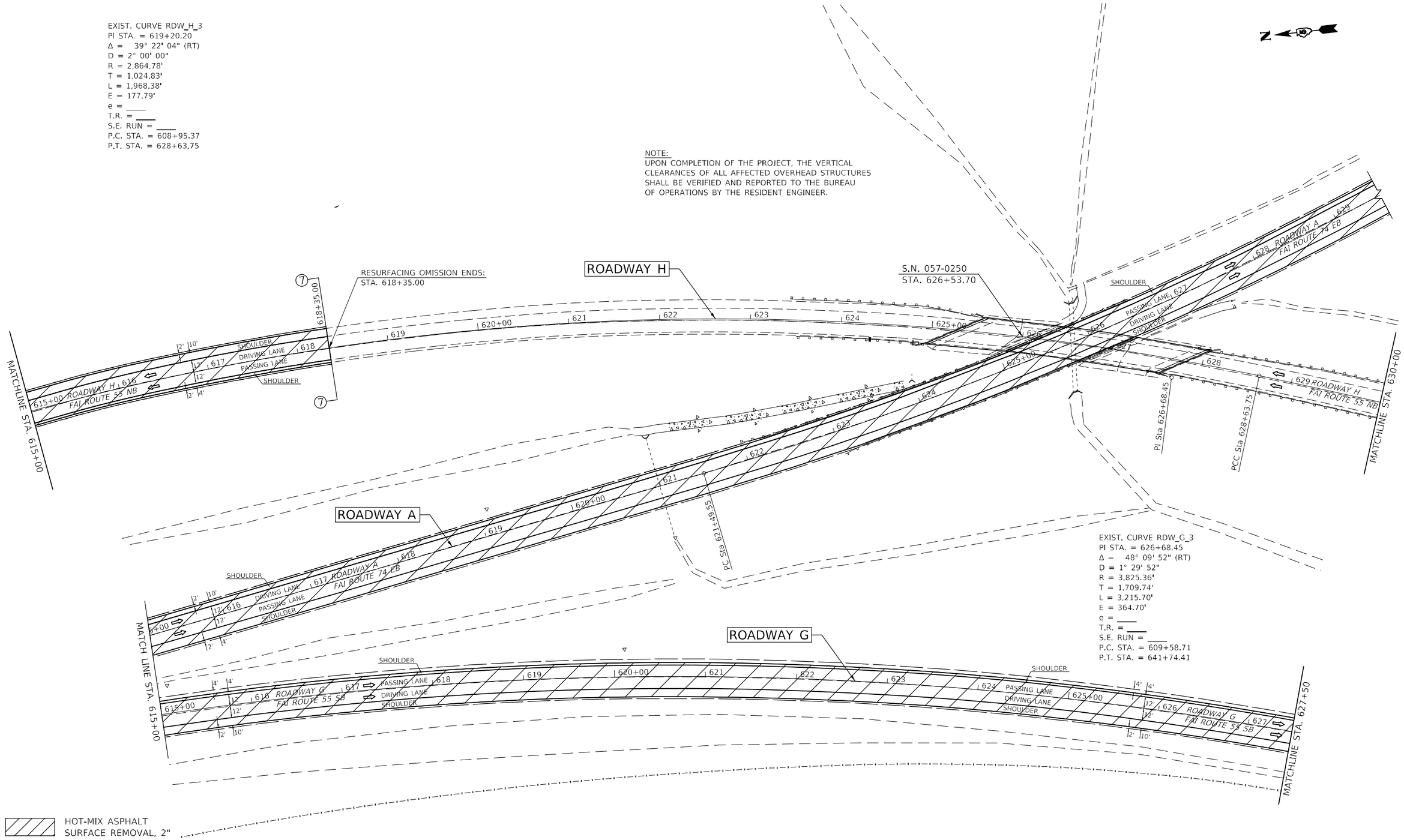

USER NAME = Greg.Eaglin	DESIGNED -	REVISED -	
	DRAWN -	REVISED -	
PLOT SCALE = 100.0000 ' / in.	CHECKED -	REVISED -	
PLOT DATE = 1/25/2023	DATE -	REVISED -	

STATE OF ILLINOIS
DEPARTMENT OF TRANSPORTATION

FAI – 55
ROADWAY G (SB) & ROADWAY H (NB)

SCALE: | SHEET 12 OF 21 SHEETS | STA. 615+00.00 G TO STA. 627+50.00 G

F.A.I. RTE.	SECTION	COUNTY	TOTAL SHEETS	SHEET NO.
74A	**	MCLEAN	93	50
** (57-7)RS-3,(57-20)RS-4		CONTRACT NO. 70G08		
		ILLINOIS	FED. AID PROJECT	

MODEL: $MODEL NAMES
FILE NAME: pw:\\ildot-pw.bentley.com:PWIDOT\Documents\IDOT Offices\District 5\Projects\D570G08\CADData\CAD-Sheets\D570G08-sht-plan.dgn

EXIST. CURVE RDW_H_4
PI STA. = 636+50.71
Δ = 7° 51' 26" (RT)
D = 0° 30' 00"
R = 11,459.22'
T = 786.96'
L = 1,571.45'
E = 26.99'
e = ____
T.R. = ____
S.E. RUN = ____
P.C. STA. = 628+63.75
P.T. STA. = 644+35.20

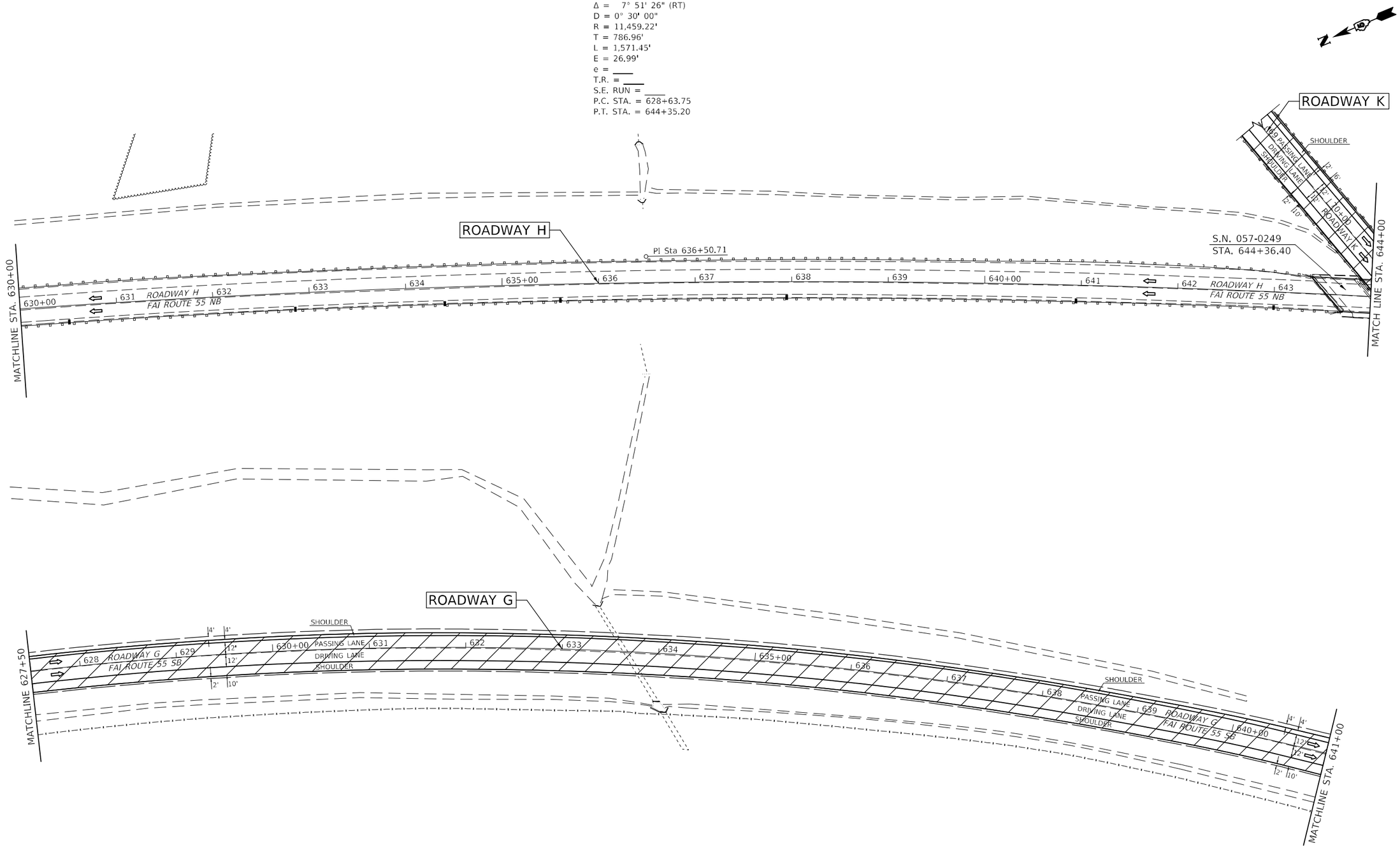

MODEL: $MODEL$NAME$
FILE NAME: pw:\\ildot-pw.bentley.com:PWIDOT\Documents\IDOT Offices\District 5\Projects\D570G08\CADData\CADsheets\D570G08-sht-plan.dgn

USER NAME = Greg.Eaglin	DESIGNED -	REVISED -	
	DRAWN -	REVISED -	
PLOT SCALE = 100.0000 ' / in.	CHECKED -	REVISED -	
PLOT DATE = 1/25/2023	DATE -	REVISED -	

STATE OF ILLINOIS
DEPARTMENT OF TRANSPORTATION

FAI – 55
ROADWAY G (SB) & ROADWAY H (NB)

SCALE: | SHEET 13 OF 21 SHEETS | STA. 627+50.00 G TO STA. 641+00.00 G

F.A.I. RTE.	SECTION	COUNTY	TOTAL SHEETS	SHEET NO.
74A	**	MCLEAN	93	51
** (57-7)RS-3,(57-20)RS-4		CONTRACT NO. 70G08		
		ILLINOIS	FED. AID PROJECT	

NOTE:
UPON COMPLETION OF THE PROJECT, THE VERTICAL CLEARANCES OF ALL AFFECTED OVERHEAD STRUCTURES SHALL BE VERIFIED AND REPORTED TO THE BUREAU OF OPERATIONS BY THE RESIDENT ENGINEER.

EXIST. CURVE RDW_H_5
PI STA. = 650+78.51
Δ = 25° 22' 57" (RT)
D = 2° 00' 21"
R = 2,856.61'
T = 643.31'
L = 1,265.51'
E = 71.54'
e = ____
T.R. = ____
S.E. RUN = ____
P.C. STA. = 644+35.20
P.T. STA. = 657+00.71

EXIST. CURVE RDW_K_3
PI STA. = 78+72.43
Δ = 34° 00' 46" (LT)
D = 2° 31' 02"
R = 2,276.20'
T = 696.18'
L = 1,351.23'
E = 104.08'
e = ____
T.R. = ____
S.E. RUN = ____
P.C. STA. = 71+76.25
P.T. STA. = 85+27.48

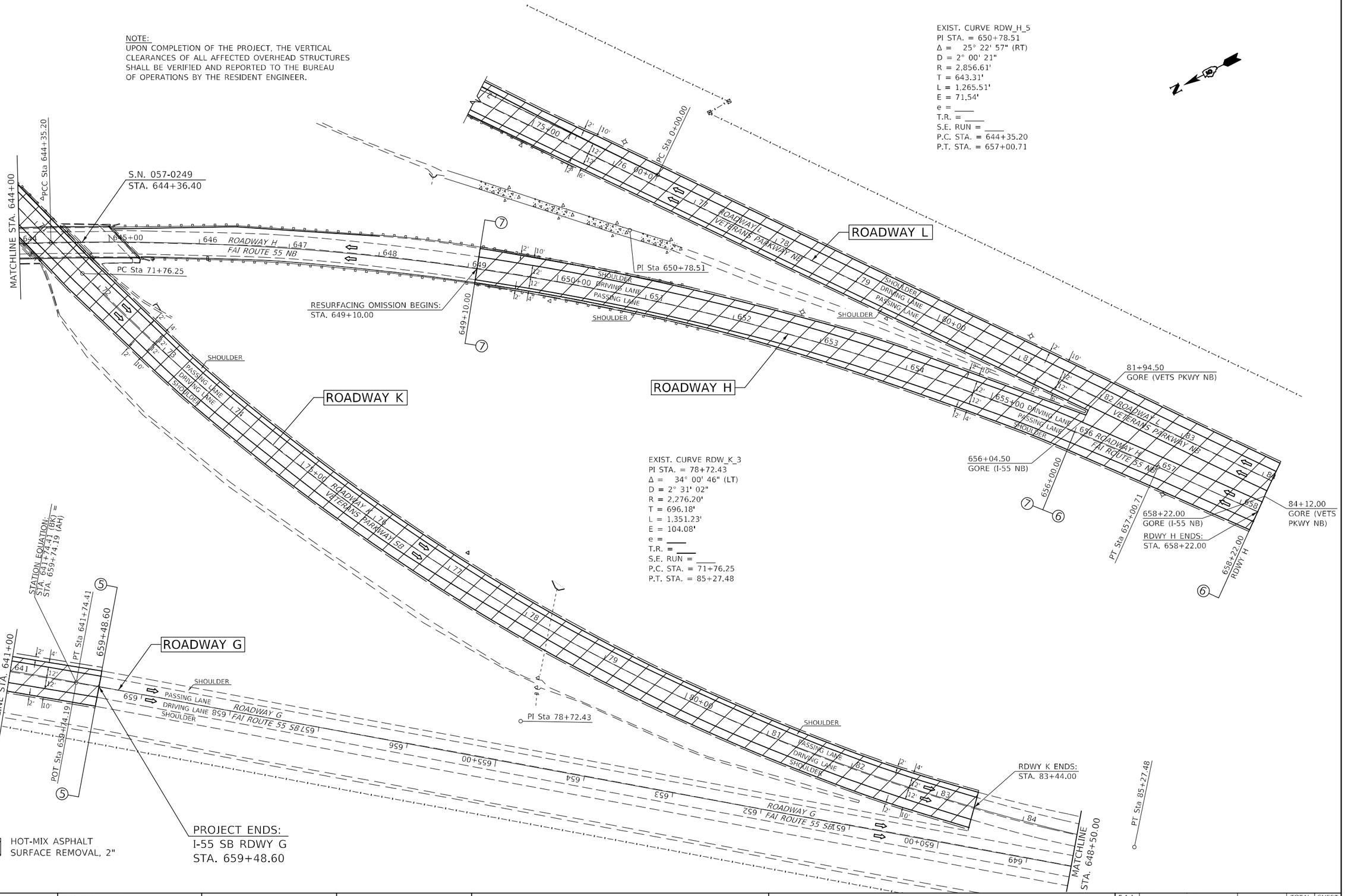

USER NAME = Greg.Eaglin	DESIGNED -	REVISED -	
	DRAWN -	REVISED -	
PLOT SCALE = 100.0000 ' / in.	CHECKED -	REVISED -	
PLOT DATE = 1/25/2023	DATE -	REVISED -	

STATE OF ILLINOIS
DEPARTMENT OF TRANSPORTATION

FAI – 55
ROADWAY G (SB) & ROADWAY H (NB)

SCALE: | SHEET 14 OF 21 SHEETS | STA. 641+00.00 G TO STA. 648+50.00 H

F.A.I. RTE.	SECTION	COUNTY	TOTAL SHEETS	SHEET NO.
74A	**	MCLEAN	93	52
** (57-7)RS-3,(57-20)RS-4		CONTRACT NO. 70G08		
		ILLINOIS FED. AID PROJECT		

MODEL: $MODELNAME$
FILE NAME: pw:\\ildot-pw.bentley.com:PWIDOT\Documents\IDOT Offices\District 5\Projects\D570G08\CADData\CADsheets\D570G08-sht-plan.dgn

EXIST. CURVE RAMP_M_4
PI STA. = 38+42.49
Δ = 22° 19' 36" (RT)
D = 8° 17' 58"
R = 690.36'
T = 136.24'
L = 269.02'
E = 13.31'
e = ____
T.R. = ____
S.E. RUN = ____
P.C. STA. = 37+06.26
P.T. STA. = 39+75.28

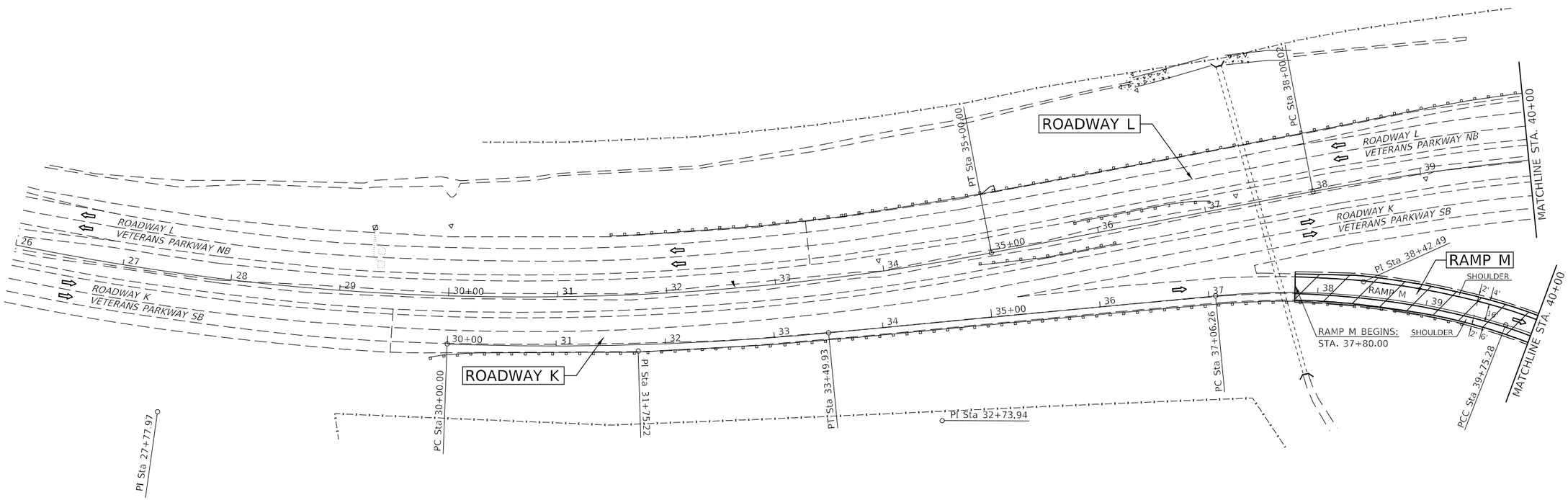

EXIST. CURVE REL66_3
PI STA. = 27+77.97
Δ = 37° 30' 00" (LT)
D = 2° 30' 00"
R = 2,291.83'
T = 777.97'
L = 1,500.00'
E = 128.44'
e = ____
T.R. = ____
S.E. RUN = ____
P.C. STA. = 20+00.00
P.T. STA. = 35+00.00

EXIST. CURVE RAMP_M_1
PI STA. = 31+75.22
Δ = 7° 34' 44" (LT)
D = 2° 09' 57"
R = 2,645.48'
T = 175.22'
L = 349.93'
E = 5.80'
e = ____
T.R. = ____
S.E. RUN = ____
P.C. STA. = 30+00.00
P.T. STA. = 33+49.93

HOT-MIX ASPHALT
SURFACE REMOVAL, 2"

MODEL: $MODEL$NAME$
FILE NAME: pw:\\ildot-pw.bentley.com:PWIDOT\Documents\IDOT Offices\District 5\Project\D570G08\CADData\CASheets\D570G08-sht-plan.dgn

USER NAME = Greg.Eaglin	DESIGNED -	REVISED -	
	DRAWN -	REVISED -	
PLOT SCALE = 100.0000 ' / in.	CHECKED -	REVISED -	
PLOT DATE = 1/25/2023	DATE -	REVISED -	

STATE OF ILLINOIS
DEPARTMENT OF TRANSPORTATION

VETERANS PARKWAY
ROADWAY K (SB) & ROADWAY L (NB)

SCALE: | SHEET 15 OF 21 SHEETS | STA. 26+00.00 TO STA. 40+00.00 NB

F.A.I. RTE.	SECTION	COUNTY	TOTAL SHEETS	SHEET NO.
74A	**	MCLEAN	93	53
** (57-7)RS-3,(57-20)RS-4		CONTRACT NO. 70G08		
		ILLINOIS FED. AID PROJECT		

EXIST. CURVE RAMP_N_5
PI STA. = 24+06.07
Δ = 13° 33' 54" (LT)
D = 2° 24' 07"
R = 2,385.37'
T = 283.70'
L = 564.75'
E = 16.81'
e = ____
T.R. = ____
S.E. RUN = ____
P.C. STA. = 21+22.37
P.T. STA. = 26+87.12

EXIST. CURVE RAMP_N_2
PI STA. = 14+35.25
Δ = 45° 23' 57" (RT)
D = 3° 58' 44"
R = 1,440.01'
T = 602.36'
L = 1,141.01'
E = 120.91'
e = ____
T.R. = ____
S.E. RUN = ____
P.C. STA. = 8+32.89
P.T. STA. = 19+73.91

EXIST. CURVE REL66_6
PI STA. = 54+79.31
Δ = 72° 26' 50" (RT)
D = 2° 29' 57"
R = 2,292.48'
T = 1,679.29'
L = 2,898.71'
E = 549.26'
e = ____
T.R. = ____
S.E. RUN = ____
P.C. STA. = 38+00.02
P.T. STA. = 66+98.73

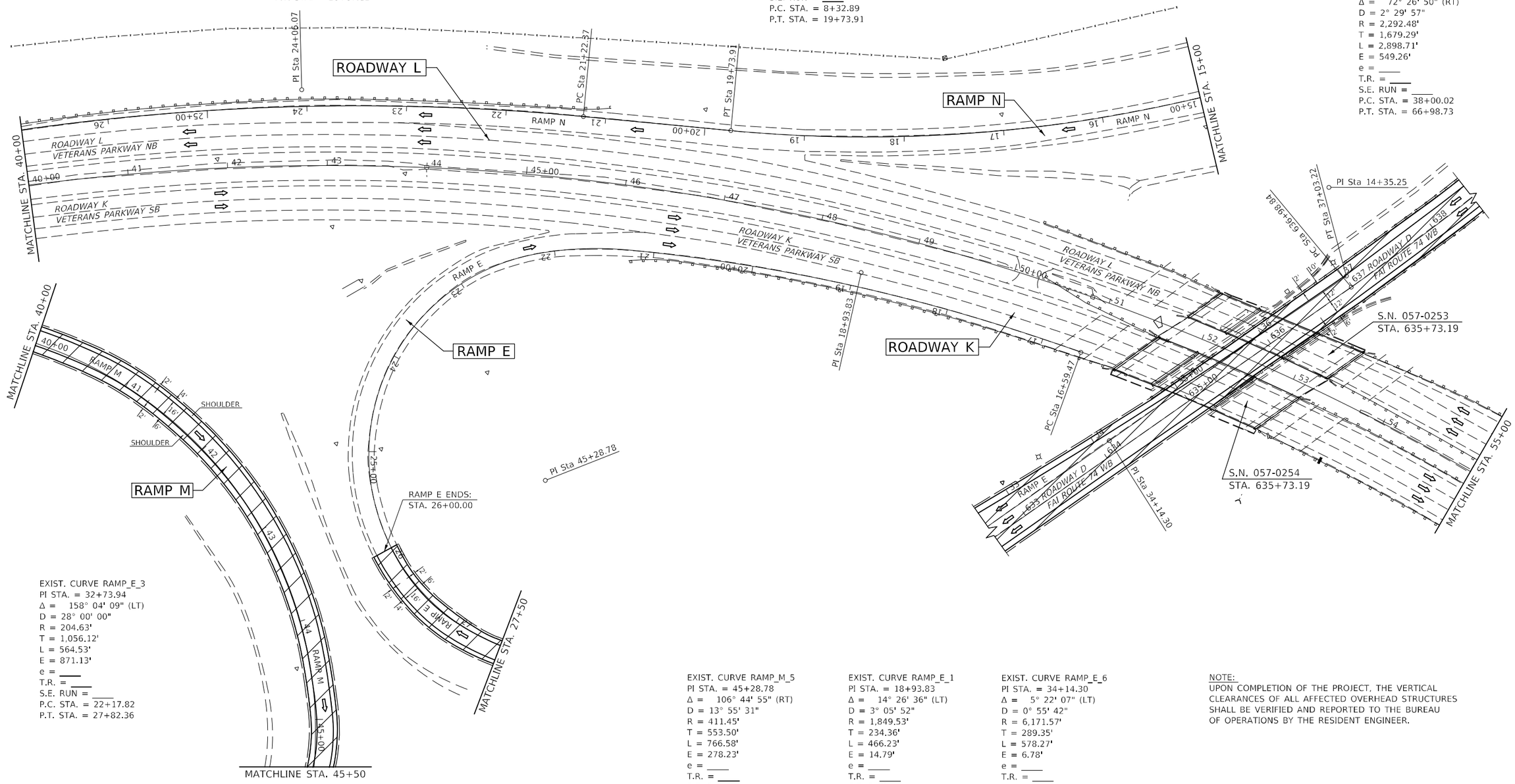

EXIST. CURVE RAMP_E_3
PI STA. = 32+73.94
Δ = 158° 04' 09" (LT)
D = 28° 00' 00"
R = 204.63'
T = 1,056.12'
L = 564.53'
E = 871.13'
e = ____
T.R. = ____
S.E. RUN = ____
P.C. STA. = 22+17.82
P.T. STA. = 27+82.36

HOT-MIX ASPHALT
SURFACE REMOVAL, 2"

EXIST. CURVE RAMP_M_5
PI STA. = 45+28.78
Δ = 106° 44' 55" (RT)
D = 13° 55' 31"
R = 411.45'
T = 553.50'
L = 766.58'
E = 278.23'
e = ____
T.R. = ____
S.E. RUN = ____
P.C. STA. = 39+75.28
P.T. STA. = 47+41.86

EXIST. CURVE RAMP_E_1
PI STA. = 18+93.83
Δ = 14° 26' 36" (LT)
D = 3° 05' 52"
R = 1,849.53'
T = 234.36'
L = 466.23'
E = 14.79'
e = ____
T.R. = ____
S.E. RUN = ____
P.C. STA. = 16+59.47
P.T. STA. = 21+25.70

EXIST. CURVE RAMP_E_6
PI STA. = 34+14.30
Δ = 5° 22' 07" (LT)
D = 0° 55' 42"
R = 6,171.57'
T = 289.35'
L = 578.27'
E = 6.78'
e = ____
T.R. = ____
S.E. RUN = ____
P.C. STA. = 31+24.96
P.T. STA. = 37+03.22

NOTE:
UPON COMPLETION OF THE PROJECT, THE VERTICAL CLEARANCES OF ALL AFFECTED OVERHEAD STRUCTURES SHALL BE VERIFIED AND REPORTED TO THE BUREAU OF OPERATIONS BY THE RESIDENT ENGINEER.

MODEL: SMODELNAMES
FILE NAME: pw:\\ildot-pw.bentley.com:PWIDOT\Documents\IDOT Offices\District 5\Projects\D570G08\CADData\CADsheets\D570G08-sht-plan.dgn

USER NAME = Greg.Eaglin	DESIGNED -	REVISED -	
	DRAWN -	REVISED -	
PLOT SCALE = 100.0000 ' / in.	CHECKED -	REVISED -	
PLOT DATE = 1/25/2023	DATE -	REVISED -	

STATE OF ILLINOIS
DEPARTMENT OF TRANSPORTATION

VETERANS PARKWAY
ROADWAY K (SB) & ROADWAY L (NB)

SCALE: | SHEET 16 OF 21 SHEETS | STA. 40+00.00 TO STA. 55+00.00 NB

F.A.I. RTE.	SECTION	COUNTY	TOTAL SHEETS	SHEET NO.
74A	**	MCLEAN	93	54
	** (57-7)RS-3,(57-20)RS-4	CONTRACT NO. 70G08		
		ILLINOIS FED. AID PROJECT		

EXIST. CURVE RAMP_J_1
PI STA. = 0+96.68
Δ = 18° 16' 45" (RT)
D = 9° 32' 06"
R = 600.90'
T = 96.68'
L = 191.71'
E = 7.73'
e = ____
T.R. = ____
S.E. RUN = ____
P.C. STA. = 0+00.00
P.T. STA. = 1+91.71

EXIST. CURVE RAMP_J_3
PI STA. = 13+52.90
Δ = 33° 19' 28" (RT)
D = 12° 42' 46"
R = 450.70'
T = 134.89'
L = 262.13'
E = 19.75'
e = ____
T.R. = ____
S.E. RUN = ____
P.C. STA. = 12+18.01
P.T. STA. = 14+80.15

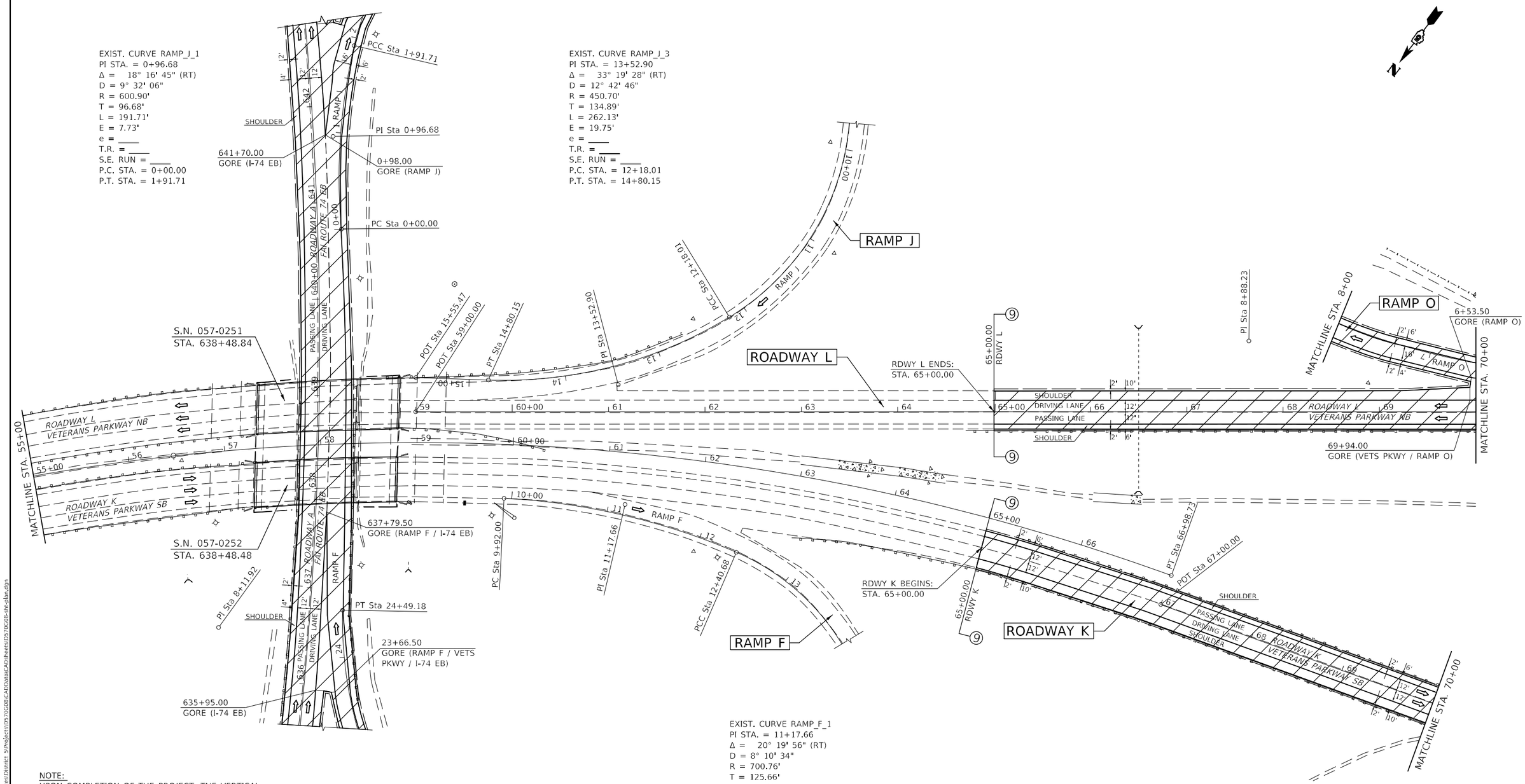

EXIST. CURVE RAMP_F_1
PI STA. = 11+17.66
Δ = 20° 19' 56" (RT)
D = 8° 10' 34"
R = 700.76'
T = 125.66'
L = 248.68'
E = 11.18'
e = ____
T.R. = ____
S.E. RUN = ____
P.C. STA. = 9+92.00
P.T. STA. = 12+40.68

NOTE:
UPON COMPLETION OF THE PROJECT, THE VERTICAL CLEARANCES OF ALL AFFECTED OVERHEAD STRUCTURES SHALL BE VERIFIED AND REPORTED TO THE BUREAU OF OPERATIONS BY THE RESIDENT ENGINEER.

HOT-MIX ASPHALT SURFACE REMOVAL, 2"

MODEL: SMODEL NAMES
FILE NAME: pw:\\ildot-pw.bentley.com:PWIDOT\Documents\IDOT Offices\District 5\Projects\D570G08\CADData\CADsheets\D570G08-sht-plan.dgn

USER NAME = Greg.Eaglin	DESIGNED -	REVISED -	
	DRAWN -	REVISED -	
PLOT SCALE = 100.0000 ' / in.	CHECKED -	REVISED -	
PLOT DATE = 1/25/2023	DATE -	REVISED -	

STATE OF ILLINOIS
DEPARTMENT OF TRANSPORTATION

VETERANS PARKWAY
ROADWAY K (SB) & ROADWAY L (NB)

SCALE: | SHEET 17 OF 21 SHEETS | STA. 55+00.00 TO STA. 70+00.00 NB

F.A.I. RTE.	SECTION	COUNTY	TOTAL SHEETS	SHEET NO.
74A	**	MCLEAN	93	55
	** (57-7)RS-3,(57-20)RS-4	CONTRACT NO. 70G08		
		ILLINOIS	FED. AID PROJECT	

EXIST. CURVE RAMP_O_1
PI STA. = 3+00.27
Δ = 6° 00' 00" (RT)
D = 1° 00' 00"
R = 5,729.49'
T = 300.27'
L = 599.99'
E = 7.86'
e = ____
T.R. = ____
S.E. RUN = ____
P.C. STA. = 0+00.00
P.T. STA. = 5+99.99

EXIST. CURVE RDW_H_5
PI STA. = 650+78.51
Δ = 25° 22' 57" (RT)
D = 2° 00' 21"
R = 2,856.61'
T = 643.31'
L = 1,265.51'
E = 71.54'
e = ____
T.R. = ____
S.E. RUN = ____
P.C. STA. = 644+35.20
P.T. STA. = 657+00.71

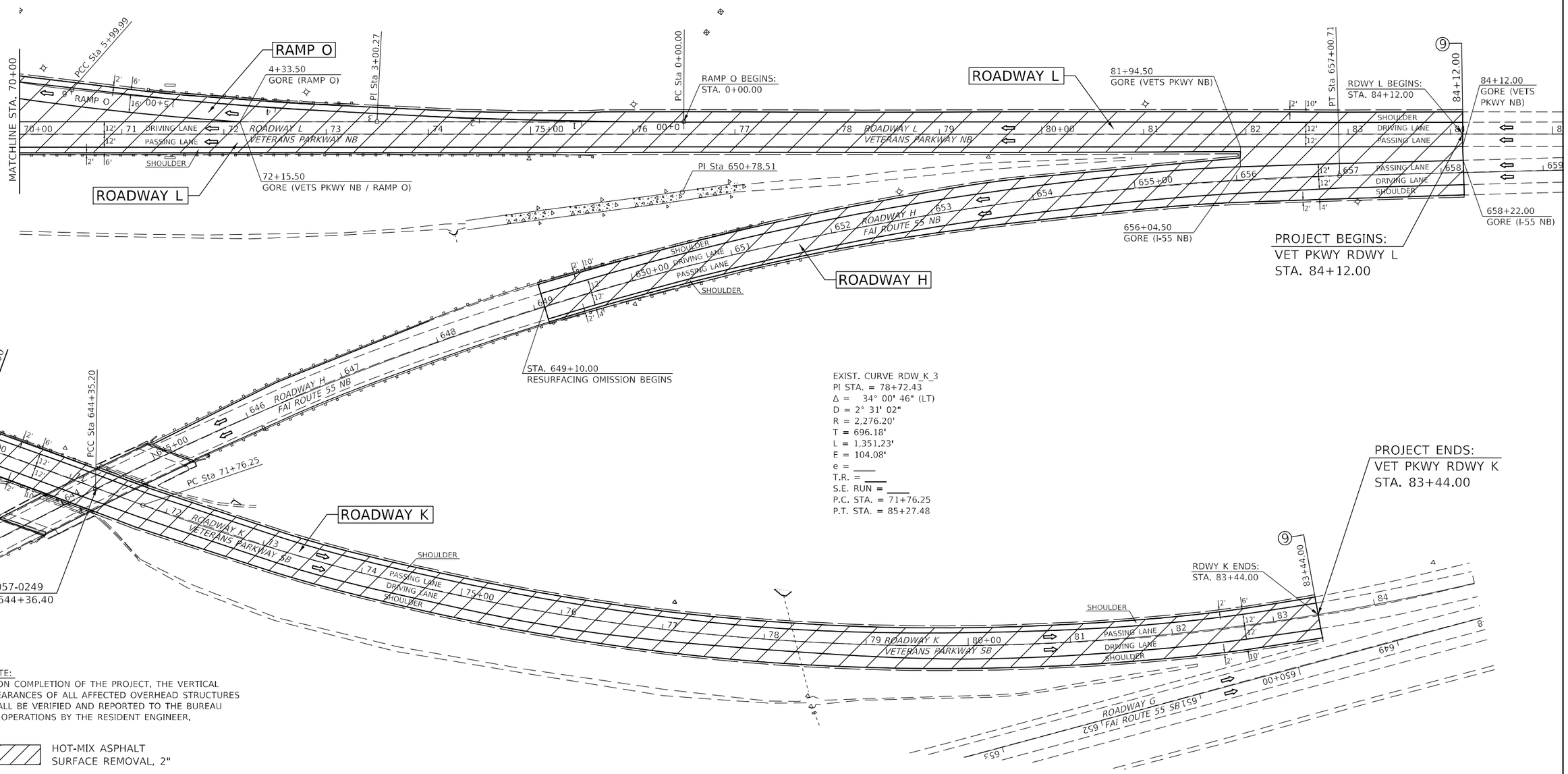

EXIST. CURVE RDW_K_3
PI STA. = 78+72.43
Δ = 34° 00' 46" (LT)
D = 2° 31' 02"
R = 2,276.20'
T = 696.18'
L = 1,351.23'
E = 104.08'
e = ____
T.R. = ____
S.E. RUN = ____
P.C. STA. = 71+76.25
P.T. STA. = 85+27.48

PROJECT ENDS:
VET PKWY RDWY K
STA. 83+44.00

NOTE:
UPON COMPLETION OF THE PROJECT, THE VERTICAL CLEARANCES OF ALL AFFECTED OVERHEAD STRUCTURES SHALL BE VERIFIED AND REPORTED TO THE BUREAU OF OPERATIONS BY THE RESIDENT ENGINEER.

HOT-MIX ASPHALT SURFACE REMOVAL, 2"

MODEL: $MODEL NAME$
FILE NAME: pw:\\ildot-pw.bentley.com:PWIDOT\Documents\IDOT Offices\District 5\Projects\D570G08\CADData\CADsheets\D570G08-sht-plan.dgn

USER NAME = Greg.Eaglin	DESIGNED -	REVISED -	
	DRAWN -	REVISED -	
PLOT SCALE = 100.0000 ' / in.	CHECKED -	REVISED -	
PLOT DATE = 1/25/2023	DATE -	REVISED -	

STATE OF ILLINOIS
DEPARTMENT OF TRANSPORTATION

VETERANS PARKWAY
ROADWAY K (SB) & ROADWAY L (NB)

SCALE: | SHEET 18 OF 21 SHEETS | STA. 70+00.00 NB TO STA. 84+12.00 NB

F.A.I. RTE.	SECTION	COUNTY	TOTAL SHEETS	SHEET NO.
74A	**	MCLEAN	93	56
** (57-7)RS-3,(57-20)RS-4		CONTRACT NO. 70G08		
		ILLINOIS	FED. AID PROJECT	

EXIST. CURVE RAMP_F_3
PI STA. = 22+62.09
Δ = 55° 46' 30" (RT)
D = 13° 36' 21"
R = 421.11'
T = 222.85'
L = 409.94'
E = 55.33'
e = ____
T.R. = ____
S.E. RUN = ____
P.C. STA. = 20+39.24
P.T. STA. = 24+49.18

EXIST. CURVE RAMP_F_2
PI STA. = 34+52.83
Δ = 192° 16' 45" (RT)
D = 24° 04' 41"
R = 237.96'
T = 2,212.15'
L = 798.57'
E = 2,462.87'
e = ____
T.R. = ____
S.E. RUN = ____
P.C. STA. = 12+40.68
P.T. STA. = 20+39.24

EXIST. CURVE RAMP_F_1
PI STA. = 11+17.66
Δ = 20° 19' 56" (RT)
D = 8° 10' 34"
R = 700.76'
T = 125.66'
L = 248.68'
E = 11.18'
e = ____
T.R. = ____
S.E. RUN = ____
P.C. STA. = 9+92.00
P.T. STA. = 12+40.68

EXIST. CURVE RAMP_J_1
PI STA. = 0+96.68
Δ = 18° 16' 45" (RT)
D = 9° 32' 06"
R = 600.90'
T = 96.68'
L = 191.71'
E = 7.73'
e = ____
T.R. = ____
S.E. RUN = ____
P.C. STA. = 0+00.00
P.T. STA. = 1+91.71

EXIST. CURVE RAMP_J_3
PI STA. = 13+52.90
Δ = 33° 19' 28" (RT)
D = 12° 42' 46"
R = 450.70'
T = 134.89'
L = 262.13'
E = 19.75'
e = ____
T.R. = ____
S.E. RUN = ____
P.C. STA. = 12+18.01
P.T. STA. = 14+80.15

EXIST. CURVE RAMP_O_5
PI STA. = 15+25.55
Δ = 19° 47' 52" (LT)
D = 8° 03' 20"
R = 711.27'
T = 124.12'
L = 245.77'
E = 10.75'
e = ____
T.R. = ____
S.E. RUN = ____
P.C. STA. = 14+01.43
P.T. STA. = 16+47.20

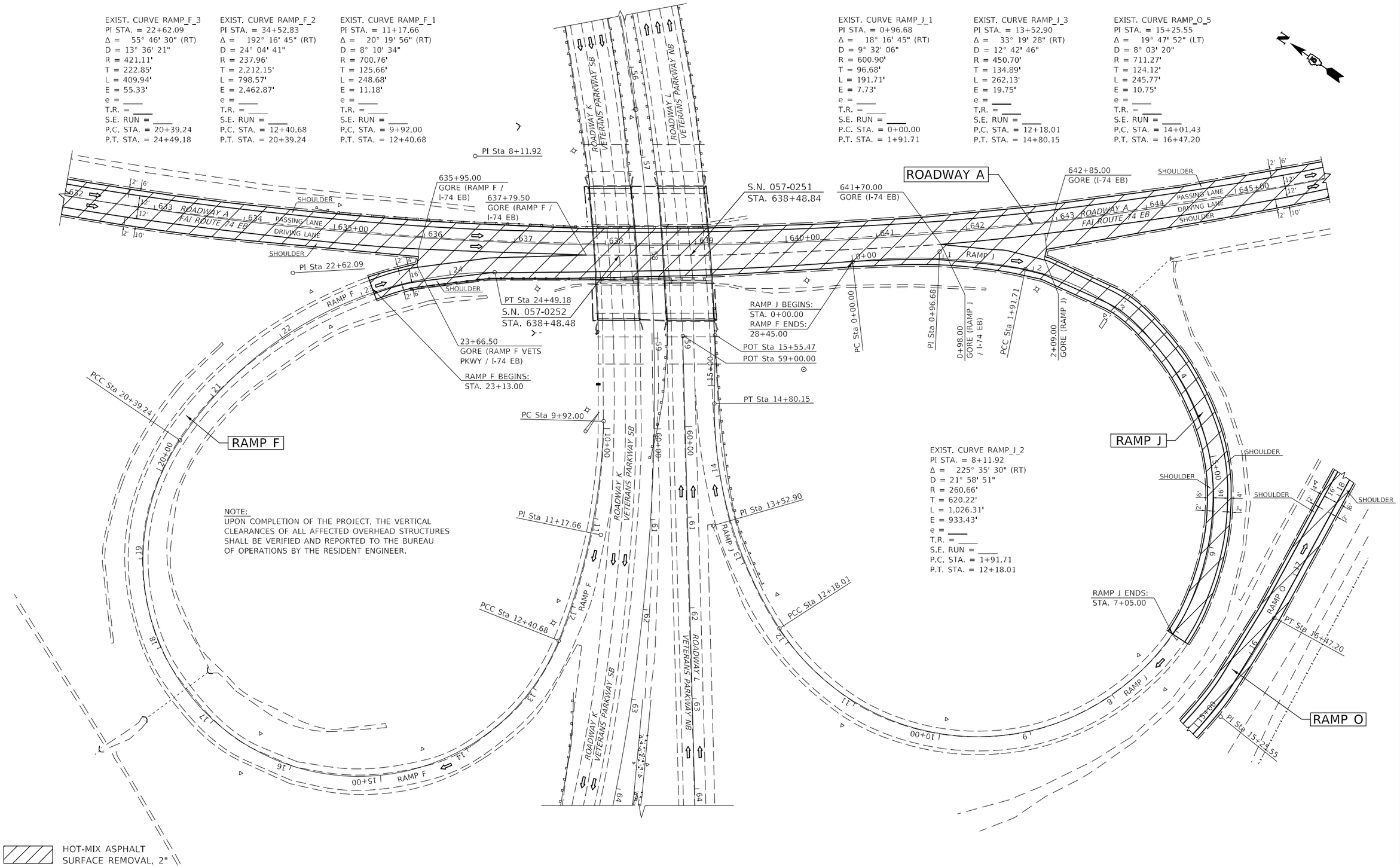

EXIST. CURVE RAMP_J_2
PI STA. = 8+11.92
Δ = 225° 35' 30" (RT)
D = 21° 58' 51"
R = 260.66'
T = 620.22'
L = 1,026.31'
E = 933.43'
e = ____
T.R. = ____
S.E. RUN = ____
P.C. STA. = 1+91.71
P.T. STA. = 12+18.01

NOTE:
UPON COMPLETION OF THE PROJECT, THE VERTICAL CLEARANCES OF ALL AFFECTED OVERHEAD STRUCTURES SHALL BE VERIFIED AND REPORTED TO THE BUREAU OF OPERATIONS BY THE RESIDENT ENGINEER.

MODEL: $MODELNAME$
FILE NAME: pw:\\ildot-pw.bentley.com:PWIDOT\Documents\IDOT Offices\Districts S\Project\D570G08\CADData\CAD sheets\D570G08-sht-plan.dgn

USER NAME = Greg.Eaglin	DESIGNED -	REVISED -	
	DRAWN -	REVISED -	
PLOT SCALE = 100.0000 ' / in.	CHECKED -	REVISED -	
PLOT DATE = 1/25/2023	DATE -	REVISED -	

STATE OF ILLINOIS
DEPARTMENT OF TRANSPORTATION

FAI – 74 (EB) & VETERANS PARKWAY
RAMP F & RAMP J

SCALE: | SHEET 19 OF 21 SHEETS | STA. | TO STA.

F.A.I. RTE.	SECTION	COUNTY	TOTAL SHEETS	SHEET NO.
74A	**	MCLEAN	93	57
** (57-7)RS-3,(57-20)RS-4		CONTRACT NO. 70G08		
		ILLINOIS FED. AID PROJECT		

EXIST. CURVE 51RMPF_6
PI STA. = 20+06.01
Δ = 54° 34' 24" (RT)
D = 6° 40' 00"
R = 859.44'
T = 443.34'
L = 818.60'
E = 107.61'
e = ____
T.R. = ____
S.E. RUN = ____
P.C. STA. = 15+62.68
P.T. STA. = 23+81.28

EXIST. CURVE 51RMPD_4
PI STA. = 21+95.25
Δ = 34° 37' 12" (RT)
D = 18° 09' 35"
R = 315.51'
T = 98.33'
L = 190.64'
E = 14.97'
e = ____
T.R. = ____
S.E. RUN = ____
P.C. STA. = 20+96.92
P.T. STA. = 22+87.56

EXIST. CURVE 51RMPF_3
PI STA. = 14+28.38
Δ = 35° 27' 00" (RT)
D = 13° 54' 47"
R = 411.81'
T = 131.62'
L = 254.79'
E = 20.52'
e = ____
T.R. = ____
S.E. RUN = ____
P.C. STA. = 12+96.76
P.T. STA. = 15+51.55

EXIST. CURVE 51RMPA_1
PI STA. = 12+03.58
Δ = 7° 57' 05" (RT)
D = 1° 57' 22"
R = 2,929.15'
T = 203.58'
L = 406.51'
E = 7.07'
e = ____
T.R. = ____
S.E. RUN = ____
P.C. STA. = 10+00.00
P.T. STA. = 14+06.51

EXIST. CURVE 51RMPA_2
PI STA. = 17+24.26
Δ = 115° 35' 17" (RT)
D = 28° 37' 37"
R = 200.15'
T = 317.75'
L = 403.77'
E = 175.39'
e = ____
T.R. = ____
S.E. RUN = ____
P.C. STA. = 14+06.51
P.T. STA. = 18+10.28

EXIST. CURVE 51RMPB_3
PI STA. = 46+86.48
Δ = 50° 06' 45" (RT)
D = 20° 59' 59"
R = 272.84'
T = 127.55'
L = 238.63'
E = 28.34'
e = ____
T.R. = ____
S.E. RUN = ____
P.C. STA. = 45+58.93
P.T. STA. = 47+97.56

EXIST. CURVE 51RMPA_3
PI STA. = 21+19.85
Δ = 115° 35' 17" (RT)
D = 29° 22' 59"
R = 195.00'
T = 309.58'
L = 393.38'
E = 170.87'
e = ____
T.R. = ____
S.E. RUN = ____
P.C. STA. = 18+10.28
P.T. STA. = 22+03.66

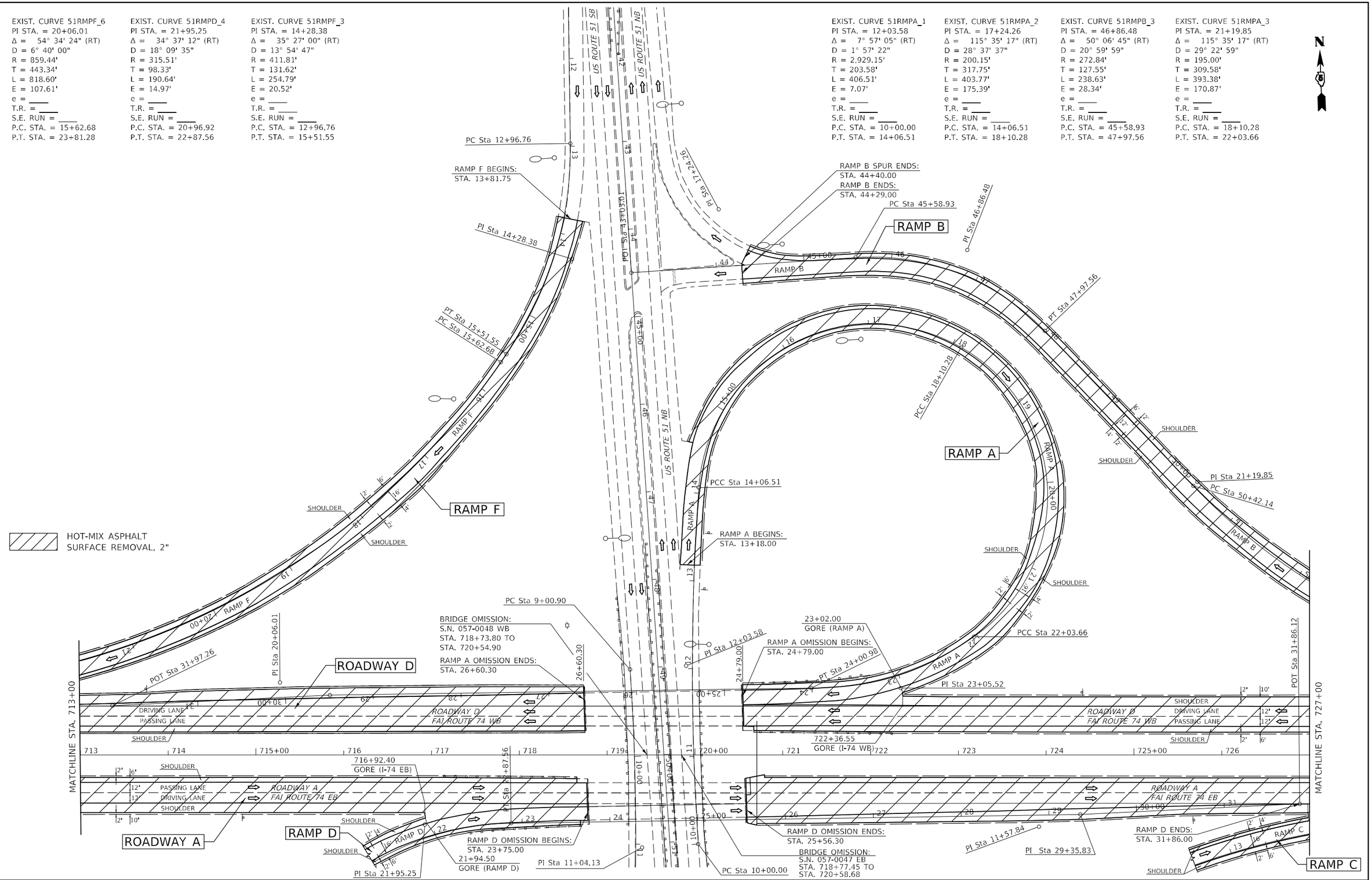

USER NAME = Greg.Eaglin	DESIGNED -	REVISED -
	DRAWN -	REVISED -
PLOT SCALE = 100.0000 ' / in.	CHECKED -	REVISED -
PLOT DATE = 1/25/2023	DATE -	REVISED -

STATE OF ILLINOIS
DEPARTMENT OF TRANSPORTATION

FAI – 74 (WB) & US 51
RAMP A, B, F

SCALE: | SHEET 20 OF 21 SHEETS | STA. 713+00.00 TO STA. 727+00.00 A

F.A.I. RTE.	SECTION	COUNTY	TOTAL SHEETS	SHEET NO.
74A	**	MCLEAN	93	58
** (57-7)RS-3,(57-20)RS-4		CONTRACT NO. 70G08		
		ILLINOIS FED. AID PROJECT		

MODEL: $MODEL$NAMES
FILE NAME: pw:\\ildot-pw.bentley.com:PWIDOT\Documents\IDOT Offices\District 5\Project\D570G08\CADData\CADsheets\D570G08-ith-plan.dgn

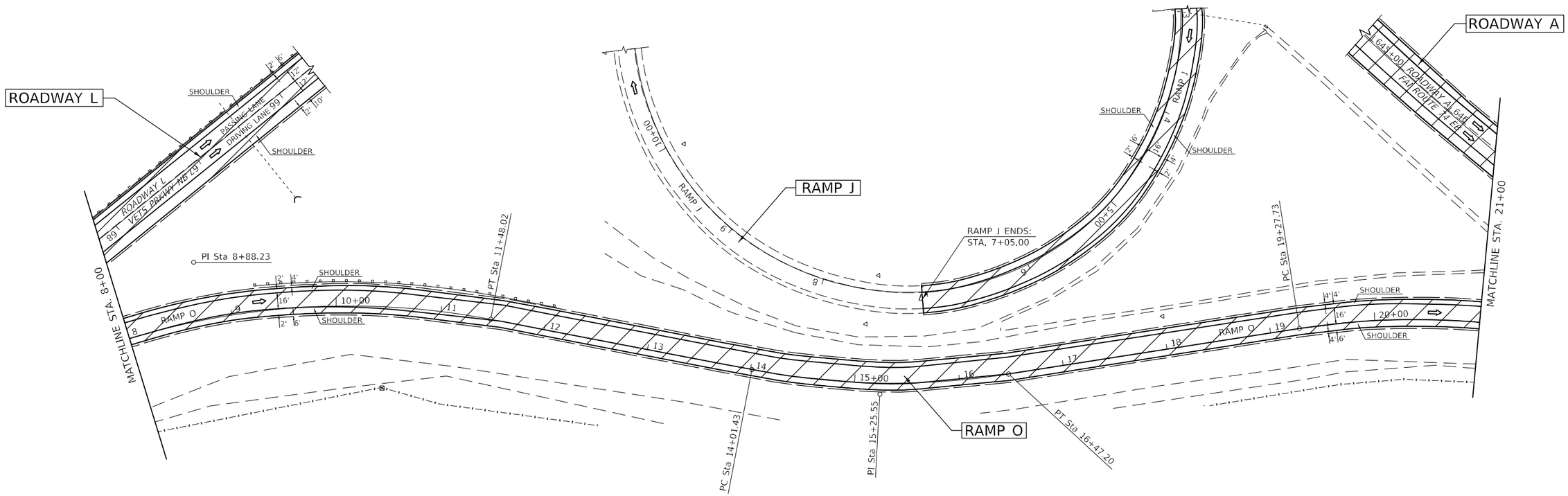

EXIST. CURVE RAMP_O_2
PI STA. = 8+88.23
Δ = 43° 52' 34" (RT)
D = 8° 00' 22"
R = 715.65'
T = 288.24'
L = 548.03'
E = 55.87'
e = ____
T.R. = ____
S.E. RUN = ____
P.C. STA. = 5+99.99
P.T. STA. = 11+48.02

EXIST. CURVE RAMP_J_2
PI STA. = 8+11.92
Δ = 225° 35' 30" (RT)
D = 21° 58' 51"
R = 260.66'
T = 620.22'
L = 1,026.31'
E = 933.43'
e = ____
T.R. = ____
S.E. RUN = ____

EXIST. CURVE RAMP_O_5
PI STA. = 15+25.55
Δ = 19° 47' 52" (LT)
D = 8° 03' 20"
R = 711.27'
T = 124.12'
L = 245.77'
E = 10.75'
e = ____
T.R. = ____
S.E. RUN = ____
P.C. STA. = 14+01.43
P.T. STA. = 16+47.20

HOT-MIX ASPHALT
SURFACE REMOVAL, 2"

MODEL: $MODEL NAMES
FILE NAME: pw:\\ildot-pw.bentley.com:PWIDOT\Documents\IDOT Offices\District 5\Projects\D570G08\CADData\CAD-Files\D570G08-sht-plan.dgn

USER NAME = Greg.Eaglin	DESIGNED -	REVISED -	
	DRAWN -	REVISED -	
PLOT SCALE = 100.0000 ' / in.	CHECKED -	REVISED -	
PLOT DATE = 1/25/2023	DATE -	REVISED -	

STATE OF ILLINOIS
DEPARTMENT OF TRANSPORTATION

VETERANS PARKWAY CONNECTOR TO FAI – 74 (EB)
RAMP O

SCALE: | SHEET 21 OF 21 SHEETS | STA. 8+00.00 TO STA. 21+00.00

F.A.I. RTE.	SECTION	COUNTY	TOTAL SHEETS	SHEET NO.
74A	**	MCLEAN	93	59
** (57-7)RS-3,(57-20)RS-4		CONTRACT NO. 70G08		
		ILLINOIS FED. AID PROJECT		

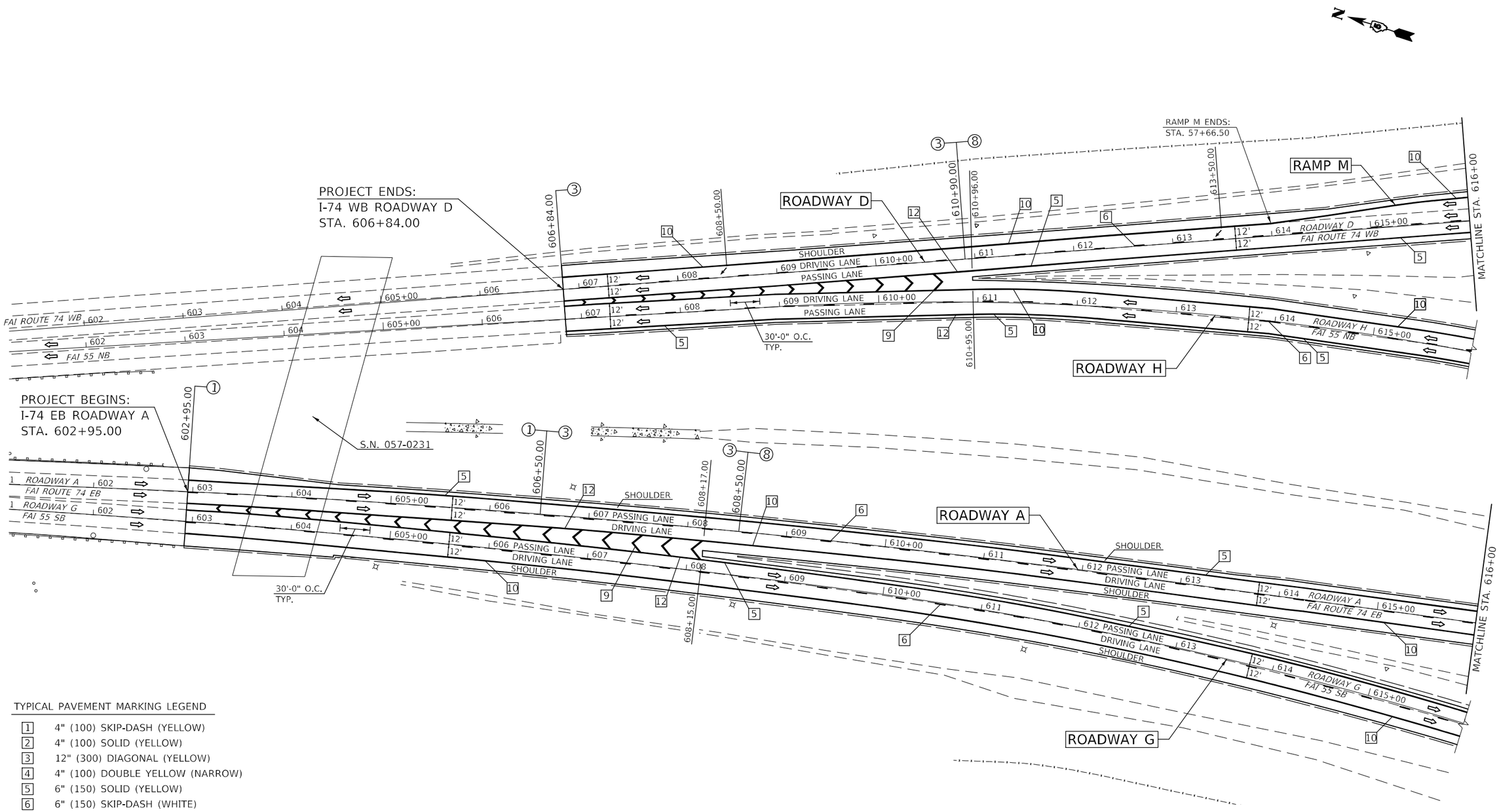

TYPICAL PAVEMENT MARKING LEGEND

1	4" (100) SKIP-DASH (YELLOW)
2	4" (100) SOLID (YELLOW)
3	12" (300) DIAGONAL (YELLOW)
4	4" (100) DOUBLE YELLOW (NARROW)
5	6" (150) SOLID (YELLOW)
6	6" (150) SKIP-DASH (WHITE)
7	4" (100) SKIP-DASH (WHITE)
8	4" (100 SOLID (WHITE)
9	12" (300) DIAGONAL (WHITE)
10	6" (150) SOLID (WHITE)
11	24" (600) STOP BAR (WHITE)
12	8" (200) SOLID (WHITE)
13	6" (150) LANE LINE EXTENSIONS (WHITE)

MODEL: $MODEL$NAME$
FILE NAME: pw:\\ildot-pw.bentley.com:PWIDOT\Documents\IDOT Offices\Districts $Project\D570G08\CADData\CADsheets\D570G08-sht-Pavt Marking.dgn

USER NAME = Greg.Eaglin	DESIGNED -	REVISED -	STATE OF ILLINOIS DEPARTMENT OF TRANSPORTATION
	DRAWN -	REVISED -	
PLOT SCALE = 100.0000 ' / in.	CHECKED -	REVISED -	
PLOT DATE = 1/25/2023	DATE -	REVISED -	

PAVEMENT MARKING PLAN SHEET
FAI – 74 / ROADWAY A (EB) & ROADWAY D (WB)

SCALE: | SHEET 1 OF 21 SHEETS | STA. 602+00.00 A TO STA. 616+00.00 A

F.A.I. RTE.	SECTION	COUNTY	TOTAL SHEETS	SHEET NO.
74A	**	MCLEAN	93	60
** (57-7)RS-3,(57-20)RS-4		CONTRACT NO. 70G08		
		ILLINOIS	FED. AID PROJECT	

TYPICAL PAVEMENT MARKING LEGEND

1	4" (100) SKIP-DASH (YELLOW)
2	4" (100) SOLID (YELLOW)
3	12" (300) DIAGONAL (YELLOW)
4	4" (100) DOUBLE YELLOW (NARROW)
5	6" (150) SOLID (YELLOW)
6	6" (150) SKIP-DASH (WHITE)
7	4" (100) SKIP-DASH (WHITE)
8	4" (100 SOLID (WHITE)
9	12" (300) DIAGONAL (WHITE)
10	6" (150) SOLID (WHITE)
11	24" (600) STOP BAR (WHITE)
12	8" (200) SOLID (WHITE)
13	6" (150) LANE LINE EXTENSIONS (WHITE)

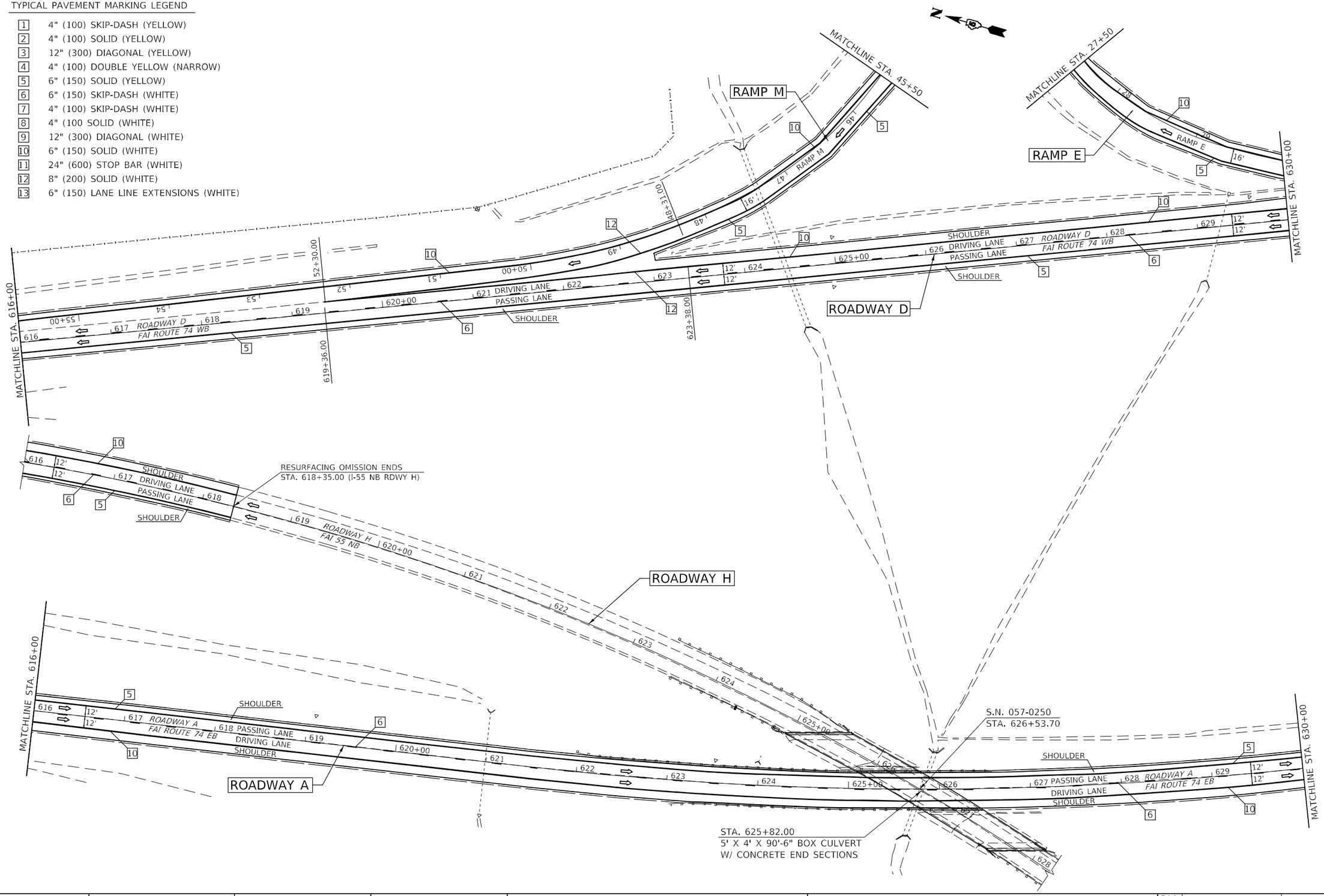

MODEL: $MODEL NAMES
FILE NAME: pw:\\ildot-pw.bentley.com:PWIDOT\Documents\IDOT Offices\District 5\Projects\D570G08\CADData\CADsheets\D570G08-sht-Pave Marking.dgn

USER NAME = Greg.Eaglin	DESIGNED -	REVISED -	
	DRAWN -	REVISED -	
PLOT SCALE = 100.0000 ' / in.	CHECKED -	REVISED -	
PLOT DATE = 1/25/2023	DATE -	REVISED -	

STATE OF ILLINOIS
DEPARTMENT OF TRANSPORTATION

PAVEMENT MARKING PLAN SHEET
FAI – 74 / ROADWAY A (EB) & ROADWAY D (WB)

SCALE: | SHEET 2 OF 21 SHEETS | STA. 616+00.00 A TO STA. 630+00.00 A

F.A.I. RTE.	SECTION	COUNTY	TOTAL SHEETS	SHEET NO.
74A	**	MCLEAN	93	61
** (57-7)RS-3,(57-20)RS-4		CONTRACT NO. 70G08		
		ILLINOIS	FED. AID PROJECT	

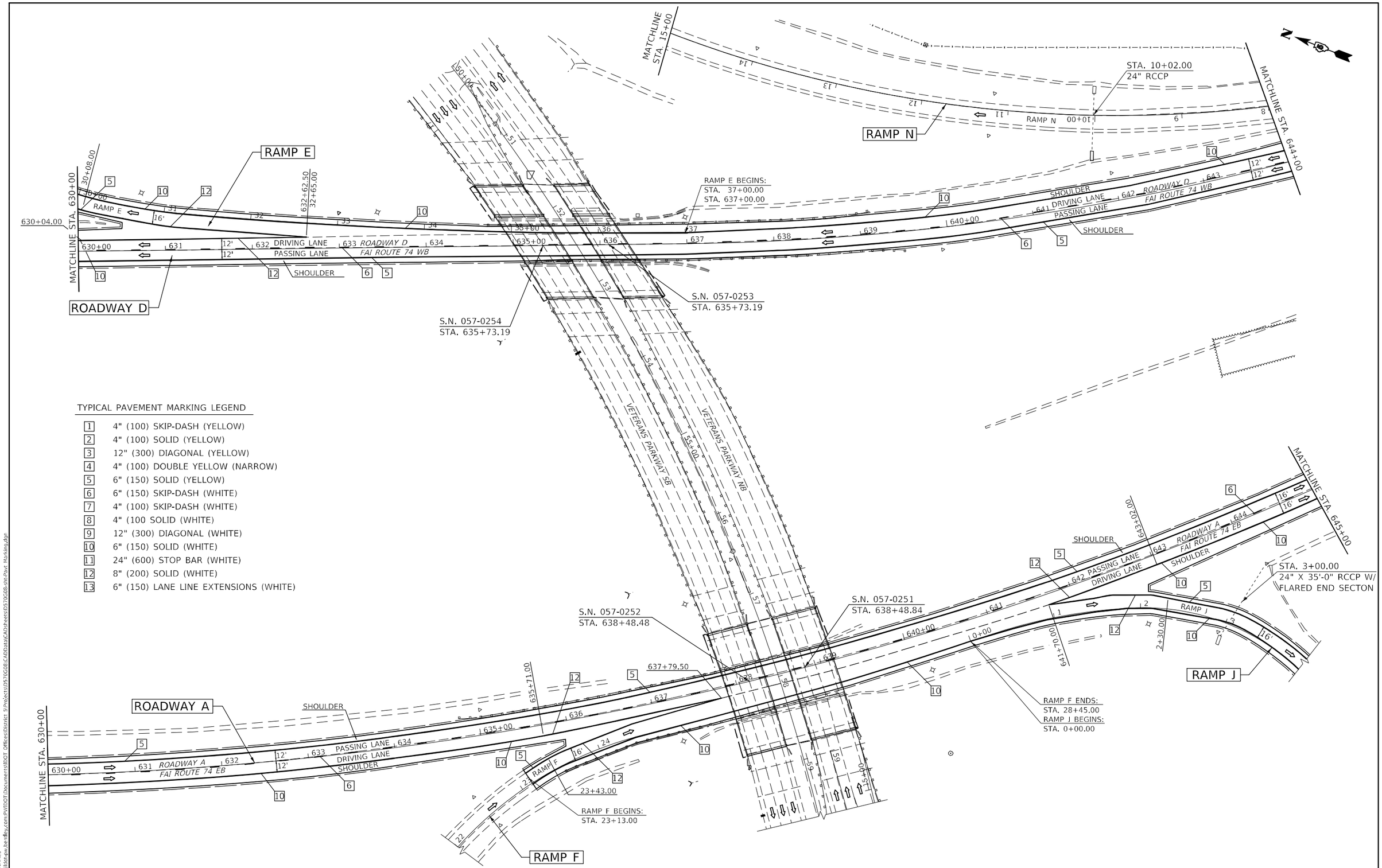

TYPICAL PAVEMENT MARKING LEGEND

1	4" (100) SKIP-DASH (YELLOW)
2	4" (100) SOLID (YELLOW)
3	12" (300) DIAGONAL (YELLOW)
4	4" (100) DOUBLE YELLOW (NARROW)
5	6" (150) SOLID (YELLOW)
6	6" (150) SKIP-DASH (WHITE)
7	4" (100) SKIP-DASH (WHITE)
8	4" (100 SOLID (WHITE)
9	12" (300) DIAGONAL (WHITE)
10	6" (150) SOLID (WHITE)
11	24" (600) STOP BAR (WHITE)
12	8" (200) SOLID (WHITE)
13	6" (150) LANE LINE EXTENSIONS (WHITE)

MODEL: $MODEL NAMES
FILE NAME: pw:\\ildot-pw.bentley.com:PWIDOT\Documents\IDOT Offices\District 5\Projects\D570G08\CADData\CADSheets\D570G08-sht-Pavt Marking.dgn

USER NAME = Greg.Eaglin	DESIGNED -	REVISED -
	DRAWN -	REVISED -
PLOT SCALE = 100.0000 ' / in.	CHECKED -	REVISED -
PLOT DATE = 1/25/2023	DATE -	REVISED -

STATE OF ILLINOIS
DEPARTMENT OF TRANSPORTATION

PAVEMENT MARKING PLAN SHEET
FAI – 74 / ROADWAY A (EB) & ROADWAY D (WB)

SCALE: | SHEET 3 OF 21 SHEETS | STA. 630+00.00 A TO STA. 645+00.00 A

F.A.I. RTE.	SECTION	COUNTY	TOTAL SHEETS	SHEET NO.
74A	**	MCLEAN	93	62
** (57-7)RS-3,(57-20)RS-4		CONTRACT NO. 70G08		
		ILLINOIS	FED. AID PROJECT	

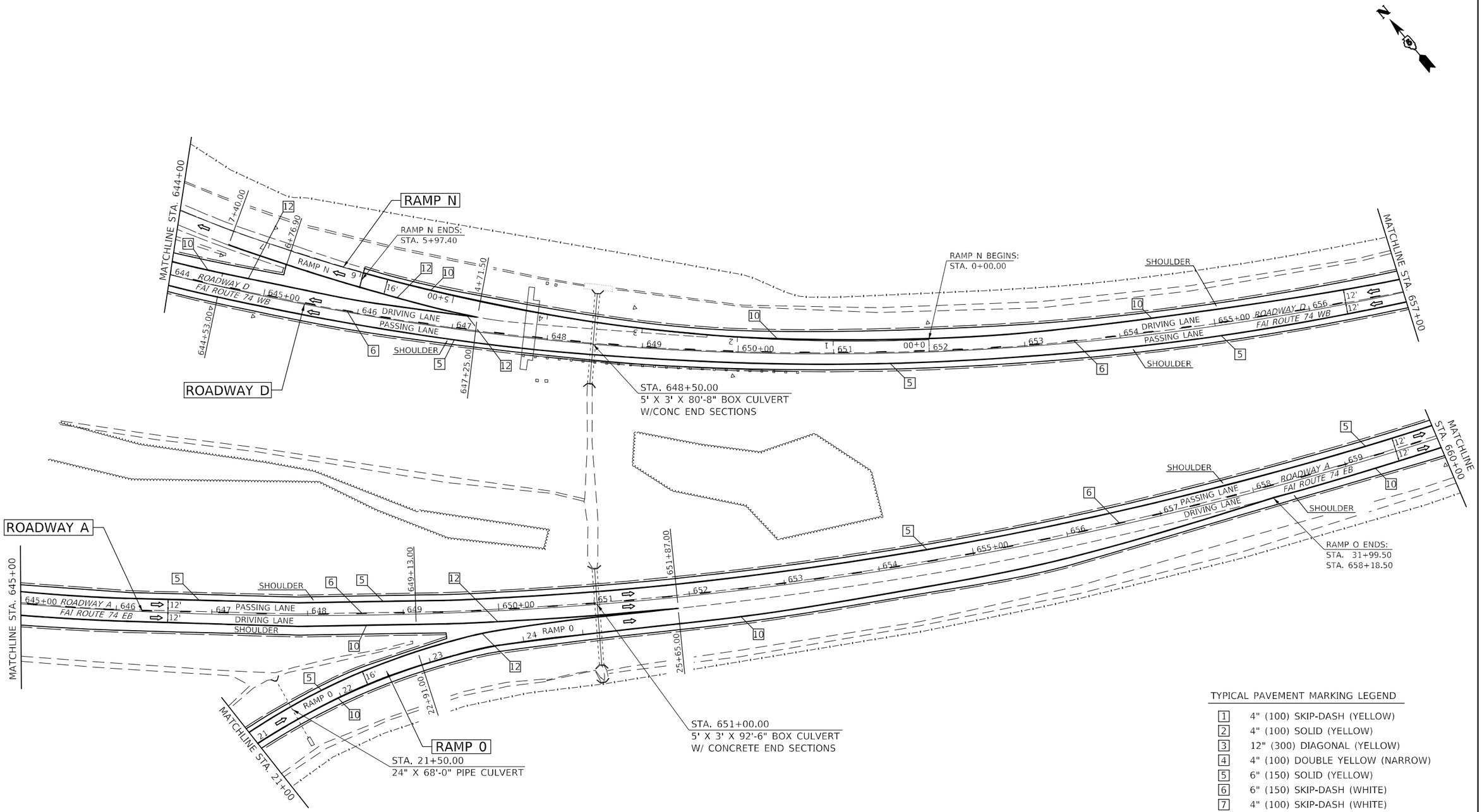

TYPICAL PAVEMENT MARKING LEGEND

1	4" (100) SKIP-DASH (YELLOW)
2	4" (100) SOLID (YELLOW)
3	12" (300) DIAGONAL (YELLOW)
4	4" (100) DOUBLE YELLOW (NARROW)
5	6" (150) SOLID (YELLOW)
6	6" (150) SKIP-DASH (WHITE)
7	4" (100) SKIP-DASH (WHITE)
8	4" (100 SOLID (WHITE)
9	12" (300) DIAGONAL (WHITE)
10	6" (150) SOLID (WHITE)
11	24" (600) STOP BAR (WHITE)
12	8" (200) SOLID (WHITE)
13	6" (150) LANE LINE EXTENSIONS (WHITE)

MODEL: SMODELNAME5
FILE NAME: pw:\\illinois-pw.bentley.com:PWIDOT\Documents\IDOT Offices\District 5\Projects\D570G08\CADData\CADsheets\D570G08-sht-Pavt Marking.dgn

USER NAME = Greg.Eaglin	DESIGNED -	REVISED -	
	DRAWN -	REVISED -	
PLOT SCALE = 100.0000 ' / in.	CHECKED -	REVISED -	
PLOT DATE = 1/25/2023	DATE -	REVISED -	

STATE OF ILLINOIS
DEPARTMENT OF TRANSPORTATION

PAVEMENT MARKING PLAN SHEET
FAI – 74 / ROADWAY A (EB) & ROADWAY D (WB)

SCALE: | SHEET 4 OF 21 SHEETS | STA. 644+00.00 A TO STA. 660+00.00 A

F.A.I. RTE.	SECTION	COUNTY	TOTAL SHEETS	SHEET NO.
74A	**	MCLEAN	93	63
** (57-7)RS-3,(57-20)RS-4		CONTRACT NO. 70G08		
		ILLINOIS FED. AID PROJECT		

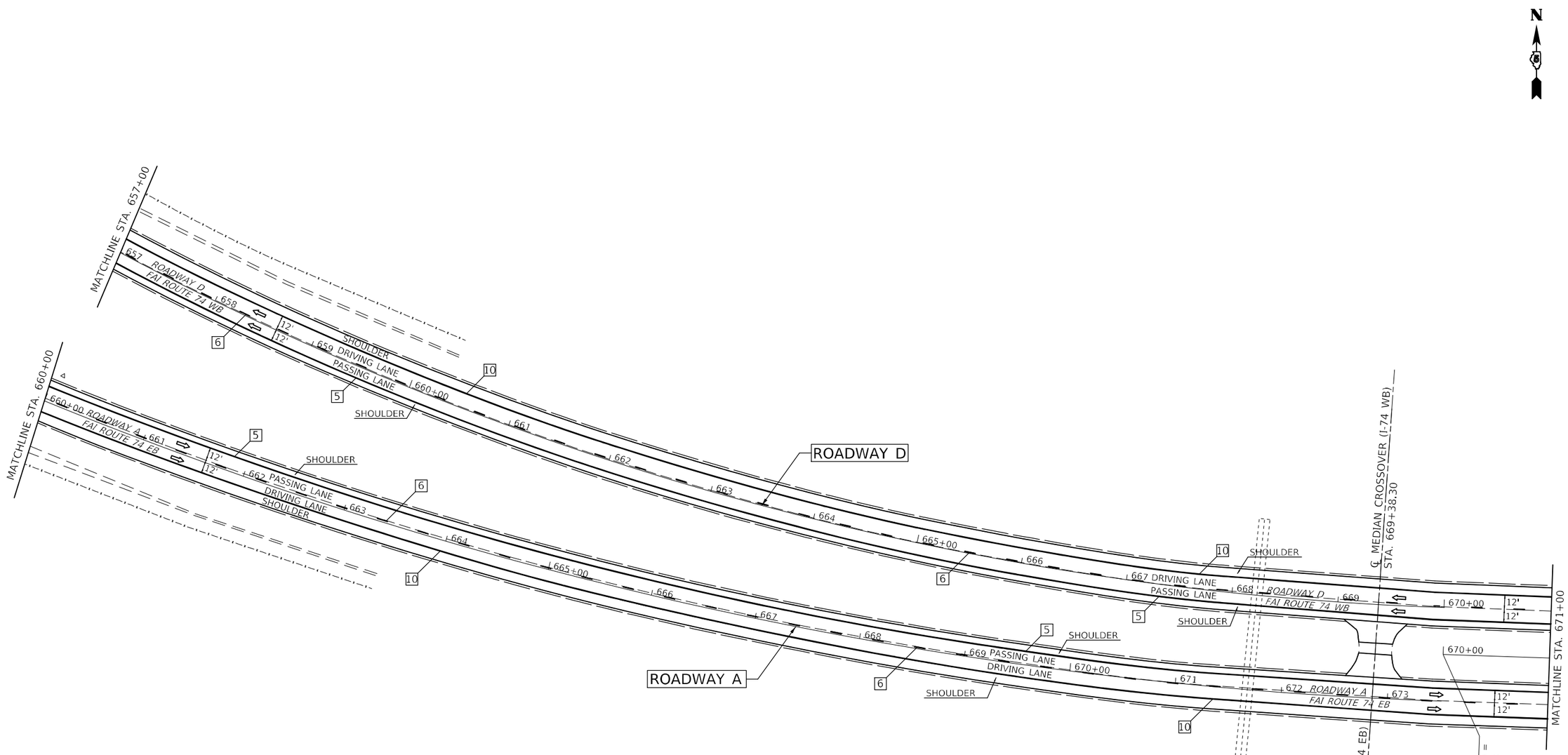

TYPICAL PAVEMENT MARKING LEGEND

1	4" (100) SKIP-DASH (YELLOW)
2	4" (100) SOLID (YELLOW)
3	12" (300) DIAGONAL (YELLOW)
4	4" (100) DOUBLE YELLOW (NARROW)
5	6" (150) SOLID (YELLOW)
6	6" (150) SKIP-DASH (WHITE)
7	4" (100) SKIP-DASH (WHITE)
8	4" (100 SOLID (WHITE)
9	12" (300) DIAGONAL (WHITE)
10	6" (150) SOLID (WHITE)
11	24" (600) STOP BAR (WHITE)
12	8" (200) SOLID (WHITE)
13	6" (150) LANE LINE EXTENSIONS (WHITE)

MODEL: $MODELNAME$
FILE NAME: pw:\\ildot-pw.bentley.com:PWIDOT\Documents\IDOT Offices\District 5\Projects\D570G08\CADData\CADsheets\D570G08-sht-Pavt Marking.dgn

USER NAME = Greg.Eaglin	DESIGNED -	REVISED -	
	DRAWN -	REVISED -	
PLOT SCALE = 100.0000 ' / in.	CHECKED -	REVISED -	
PLOT DATE = 1/25/2023	DATE -	REVISED -	

STATE OF ILLINOIS
DEPARTMENT OF TRANSPORTATION

PAVEMENT MARKING PLAN SHEET
FAI – 74 / ROADWAY A (EB) & ROADWAY D (WB)

SCALE: | SHEET 5 OF 21 SHEETS | STA. 660+00.00 A TO STA. 671+00.00 A

F.A.I. RTE.	SECTION	COUNTY	TOTAL SHEETS	SHEET NO.
74A	**	MCLEAN	93	64
** (57-7)RS-3,(57-20)RS-4		CONTRACT NO. 70G08		
		ILLINOIS	FED. AID PROJECT	

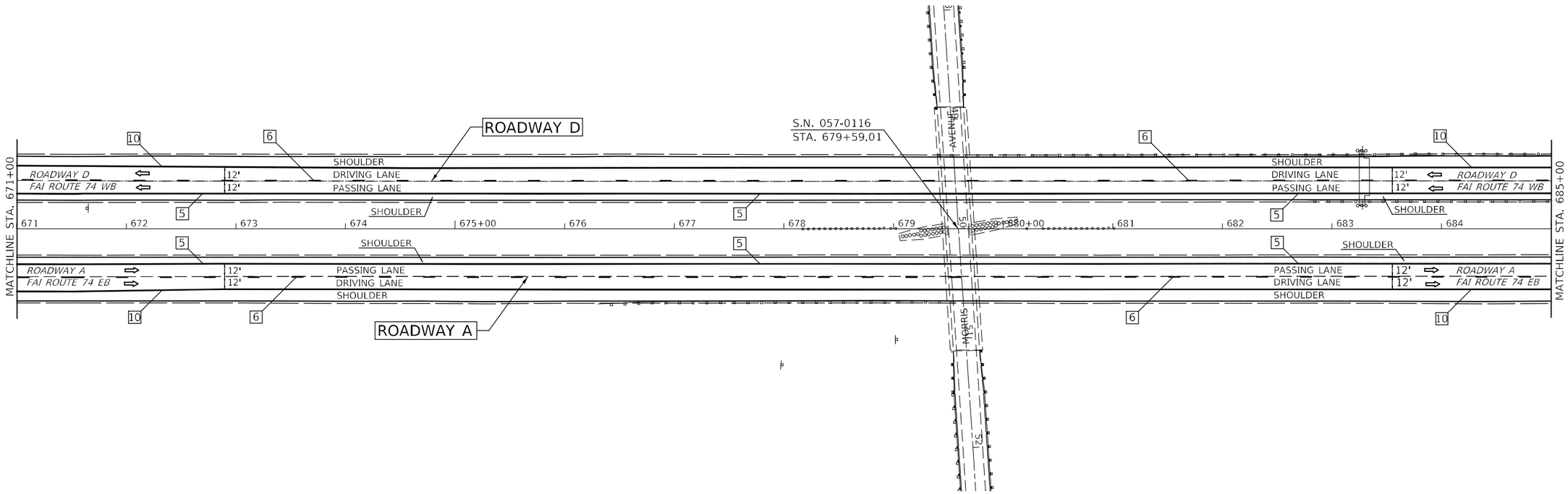

TYPICAL PAVEMENT MARKING LEGEND

1	4" (100) SKIP-DASH (YELLOW)
2	4" (100) SOLID (YELLOW)
3	12" (300) DIAGONAL (YELLOW)
4	4" (100) DOUBLE YELLOW (NARROW)
5	6" (150) SOLID (YELLOW)
6	6" (150) SKIP-DASH (WHITE)
7	4" (100) SKIP-DASH (WHITE)
8	4" (100 SOLID (WHITE)
9	12" (300) DIAGONAL (WHITE)
10	6" (150) SOLID (WHITE)
11	24" (600) STOP BAR (WHITE)
12	8" (200) SOLID (WHITE)
13	6" (150) LANE LINE EXTENSIONS (WHITE)

MODEL: $MODELNAME$
FILE NAME: pw:\\ildot-pw.bentley.com:PWIDOT\Documents\IDOT Offices\District 5\Projects\D570G08\CADData\CADsheets\D570G08-Int-Pavt Marking.dgn

USER NAME = Greg.Eaglin	DESIGNED -	REVISED -	
	DRAWN -	REVISED -	
PLOT SCALE = 100.0000 ' / in.	CHECKED -	REVISED -	
PLOT DATE = 1/25/2023	DATE -	REVISED -	

STATE OF ILLINOIS
DEPARTMENT OF TRANSPORTATION

PAVEMENT MARKING PLAN SHEET
FAI – 74 / ROADWAY A (EB) & ROADWAY D (WB)

SCALE: | SHEET 6 OF 21 SHEETS | STA. 671+00.00 TO STA. 685+00.00 A

F.A.I. RTE.	SECTION	COUNTY	TOTAL SHEETS	SHEET NO.
74A	**	MCLEAN	93	65
** (57-7)RS-3,(57-20)RS-4		CONTRACT NO. 70G08		
		ILLINOIS	FED. AID PROJECT	

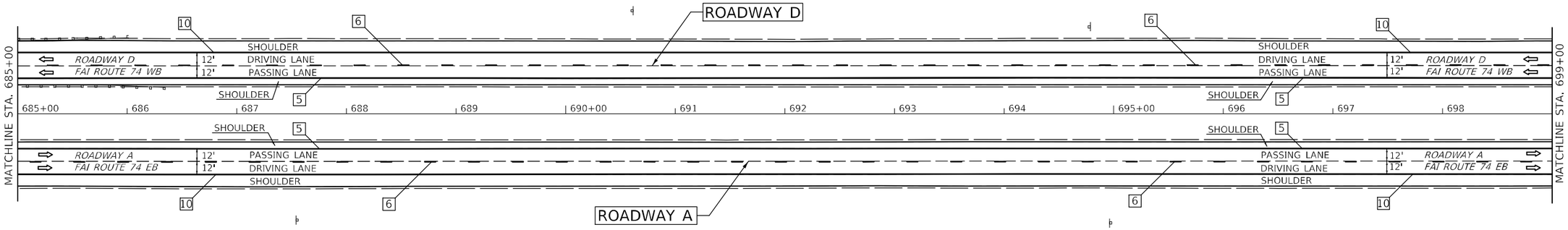

TYPICAL PAVEMENT MARKING LEGEND

1	4" (100) SKIP-DASH (YELLOW)
2	4" (100) SOLID (YELLOW)
3	12" (300) DIAGONAL (YELLOW)
4	4" (100) DOUBLE YELLOW (NARROW)
5	6" (150) SOLID (YELLOW)
6	6" (150) SKIP-DASH (WHITE)
7	4" (100) SKIP-DASH (WHITE)
8	4" (100 SOLID (WHITE)
9	12" (300) DIAGONAL (WHITE)
10	6" (150) SOLID (WHITE)
11	24" (600) STOP BAR (WHITE)
12	8" (200) SOLID (WHITE)
13	6" (150) LANE LINE EXTENSIONS (WHITE)

MODEL: $MODELNAME$
FILE NAME: pw:\\ildot-pw.bentley.com:PWIDOT\Documents\IDOT Offices\District 5\Projects\D570G08\CADData\CADsheets\D570G08-sht-Pavt Marking.dgn

USER NAME = Greg.Eaglin	DESIGNED -	REVISED -	
	DRAWN -	REVISED -	
PLOT SCALE = 100.0000 ' / in.	CHECKED -	REVISED -	
PLOT DATE = 1/25/2023	DATE -	REVISED -	

STATE OF ILLINOIS
DEPARTMENT OF TRANSPORTATION

PAVEMENT MARKING PLAN SHEET
FAI–74 / ROADWAY A (EB) & ROADWAY D (WB)

SCALE: | SHEET 7 OF 21 SHEETS | STA. 685+00.00 TO STA. 699+00.00 A

F.A.I. RTE.	SECTION	COUNTY	TOTAL SHEETS	SHEET NO.
74A	**	MCLEAN	93	66
** (57-7)RS-3,(57-20)RS-4		CONTRACT NO. 70G08		
		ILLINOIS	FED. AID PROJECT	

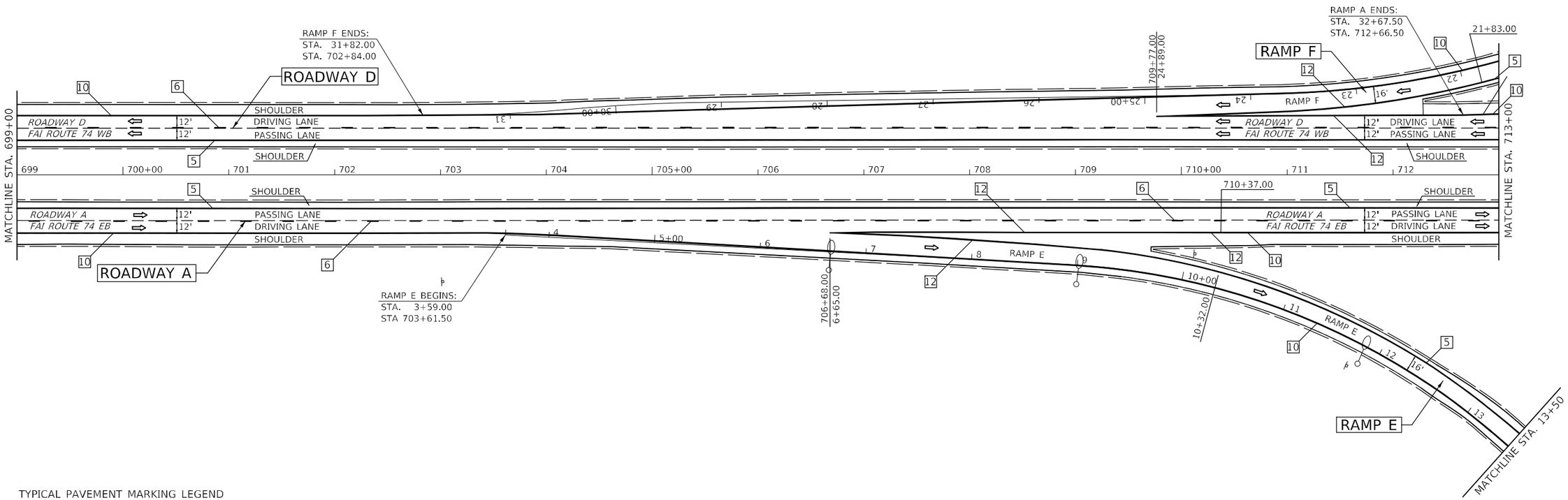

TYPICAL PAVEMENT MARKING LEGEND

1. 4" (100) SKIP-DASH (YELLOW)
2. 4" (100) SOLID (YELLOW)
3. 12" (300) DIAGONAL (YELLOW)
4. 4" (100) DOUBLE YELLOW (NARROW)
5. 6" (150) SOLID (YELLOW)
6. 6" (150) SKIP-DASH (WHITE)
7. 4" (100) SKIP-DASH (WHITE)
8. 4" (100 SOLID (WHITE)
9. 12" (300) DIAGONAL (WHITE)
10. 6" (150) SOLID (WHITE)
11. 24" (600) STOP BAR (WHITE)
12. 8" (200) SOLID (WHITE)
13. 6" (150) LANE LINE EXTENSIONS (WHITE)

MODEL: SMODELNAME5
FILE NAME: pw:\\ildot-pw.bentley.com:PWIDOT\Documents\IDOT Offices\District 5\Projects\D570G08\CADData\CADsheets\D570G08-sht-Pavt Marking.dgn

USER NAME = Greg.Eaglin	DESIGNED -	REVISED -	
	DRAWN -	REVISED -	
PLOT SCALE = 100.0000 ' / in.	CHECKED -	REVISED -	
PLOT DATE = 1/25/2023	DATE -	REVISED -	

STATE OF ILLINOIS
DEPARTMENT OF TRANSPORTATION

PAVEMENT MARKING PLAN SHEET
FAI – 74 / ROADWAY A (EB) & ROADWAY D (WB)

SCALE: | SHEET 8 OF 21 SHEETS | STA. 699+00.00 TO STA. 713+00.00 A

F.A.I. RTE.	SECTION	COUNTY	TOTAL SHEETS	SHEET NO.
74A	**	MCLEAN	93	67
** (57-7)RS-3,(57-20)RS-4		CONTRACT NO. 70G08		
		ILLINOIS	FED. AID PROJECT	

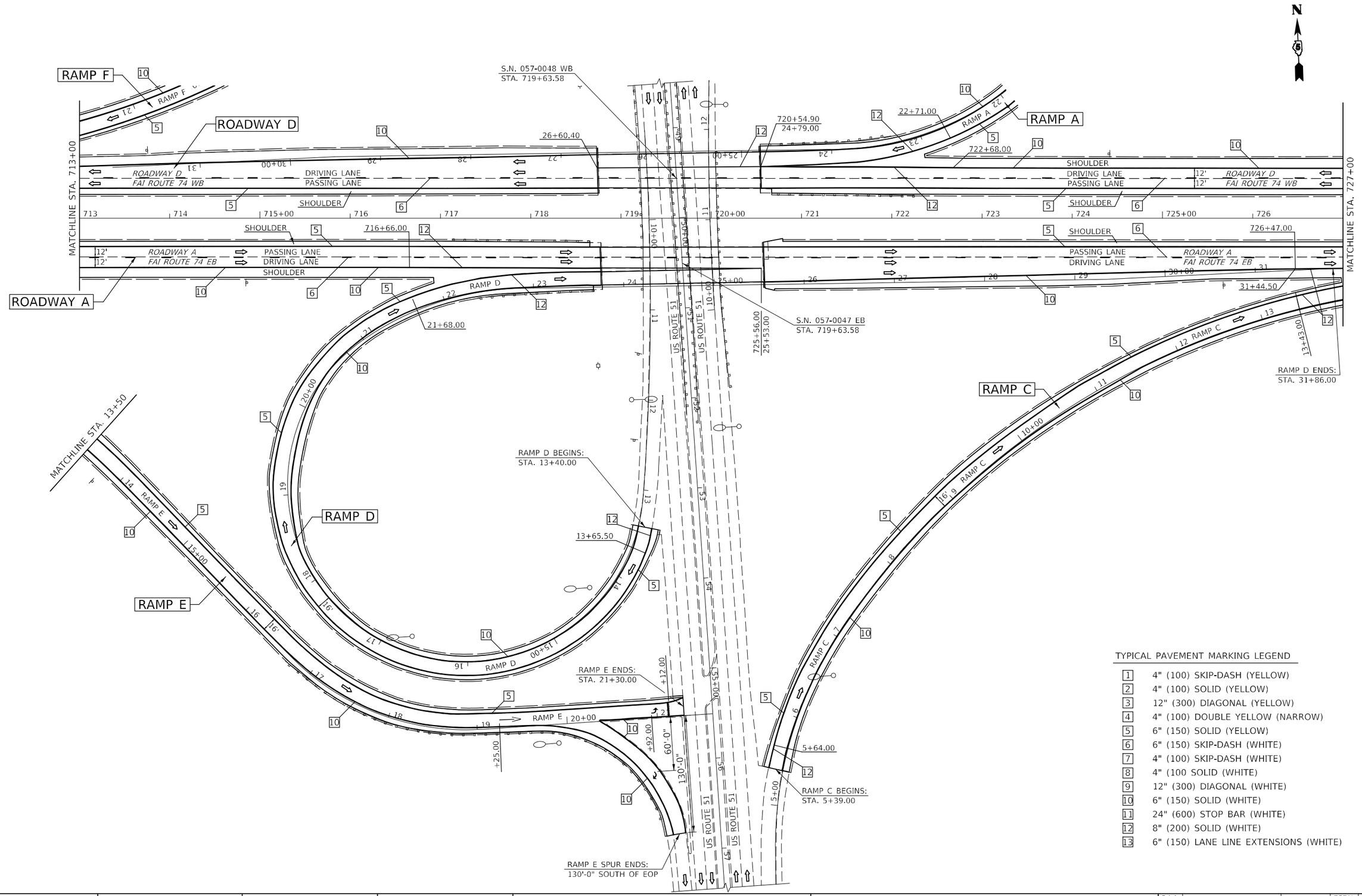

TYPICAL PAVEMENT MARKING LEGEND

1	4" (100) SKIP-DASH (YELLOW)
2	4" (100) SOLID (YELLOW)
3	12" (300) DIAGONAL (YELLOW)
4	4" (100) DOUBLE YELLOW (NARROW)
5	6" (150) SOLID (YELLOW)
6	6" (150) SKIP-DASH (WHITE)
7	4" (100) SKIP-DASH (WHITE)
8	4" (100 SOLID (WHITE)
9	12" (300) DIAGONAL (WHITE)
10	6" (150) SOLID (WHITE)
11	24" (600) STOP BAR (WHITE)
12	8" (200) SOLID (WHITE)
13	6" (150) LANE LINE EXTENSIONS (WHITE)

MODEL: $MODEL$NAMES
FILE NAME: pw:\\ildot-pw.bentley.com:PWIDOT\Documents\IDOT Offices\District 5\Project\D570G08\CADData\CADsheets\D570G08-sht-Pavt Marking.dgn

USER NAME = Greg.Eaglin	DESIGNED -	REVISED -	STATE OF ILLINOIS DEPARTMENT OF TRANSPORTATION
	DRAWN -	REVISED -	
PLOT SCALE = 100.0000 ' / in.	CHECKED -	REVISED -	
PLOT DATE = 1/25/2023	DATE -	REVISED -	

PAVEMENT MARKING PLAN SHEET /FAI – 74 ROADWAY A (EB) & ROADWAY D (WB) AND RAMP C, D, E, AT US RTE. 51

SCALE: | SHEET 9 OF 21 SHEETS | STA. 713+00.00 TO STA. 727+00.00 A

F.A.I. RTE.	SECTION	COUNTY	TOTAL SHEETS	SHEET NO.
74A	**	MCLEAN	93	68
	** (57-7)RS-3,(57-20)RS-4	CONTRACT NO. 70G08		
		ILLINOIS	FED. AID PROJECT	

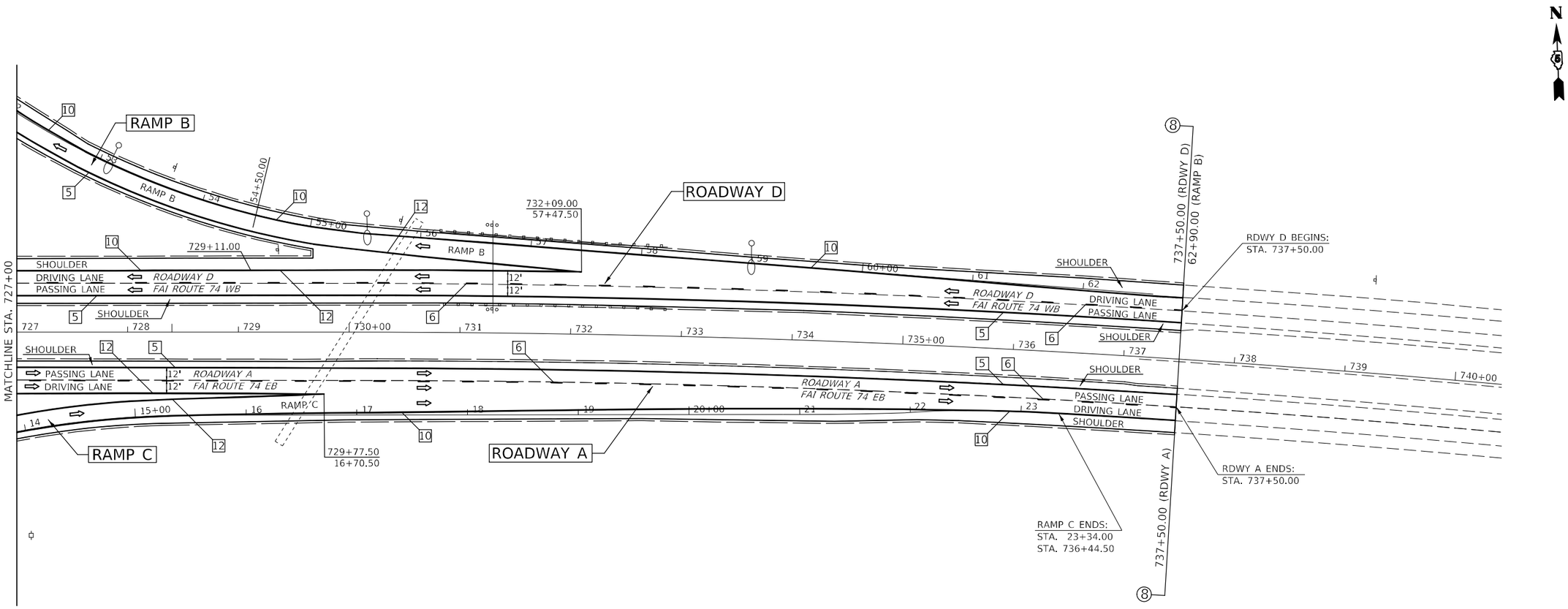

TYPICAL PAVEMENT MARKING LEGEND

1. 4" (100) SKIP-DASH (YELLOW)
2. 4" (100) SOLID (YELLOW)
3. 12" (300) DIAGONAL (YELLOW)
4. 4" (100) DOUBLE YELLOW (NARROW)
5. 6" (150) SOLID (YELLOW)
6. 6" (150) SKIP-DASH (WHITE)
7. 4" (100) SKIP-DASH (WHITE)
8. 4" (100 SOLID (WHITE)
9. 12" (300) DIAGONAL (WHITE)
10. 6" (150) SOLID (WHITE)
11. 24" (600) STOP BAR (WHITE)
12. 8" (200) SOLID (WHITE)
13. 6" (150) LANE LINE EXTENSIONS (WHITE)

MODEL: $MODEL$NAME$
FILE NAME: pw:\\ildot-pw.bentley.com:PWIDOT\Documents\IDOT Offices\District 5\Project\D570G08\CADData\CADsheets\D570G08-sht-Pavt Marking.dgn

USER NAME = Greg.Eaglin	DESIGNED -	REVISED -	
	DRAWN -	REVISED -	
PLOT SCALE = 100.0000 ' / in.	CHECKED -	REVISED -	
PLOT DATE = 1/25/2023	DATE -	REVISED -	

STATE OF ILLINOIS
DEPARTMENT OF TRANSPORTATION

PAVEMENT MARKING PLAN SHEET
FAI – 74 / ROADWAY A (EB) & ROADWAY D (WB)

SCALE: | SHEET 10 OF 21 SHEETS | STA. 727+00.00 TO STA. 737+00.00 A

F.A.I. RTE.	SECTION	COUNTY	TOTAL SHEETS	SHEET NO.
74A	**	MCLEAN	93	69
** (57-7)RS-3,(57-20)RS-4		CONTRACT NO. 70G08		
		ILLINOIS	FED. AID PROJECT	

TYPICAL PAVEMENT MARKING LEGEND

1	4" (100) SKIP-DASH (YELLOW)
2	4" (100) SOLID (YELLOW)
3	12" (300) DIAGONAL (YELLOW)
4	4" (100) DOUBLE YELLOW (NARROW)
5	6" (150) SOLID (YELLOW)
6	6" (150) SKIP-DASH (WHITE)
7	4" (100) SKIP-DASH (WHITE)
8	4" (100 SOLID (WHITE)
9	12" (300) DIAGONAL (WHITE)
10	6" (150) SOLID (WHITE)
11	24" (600) STOP BAR (WHITE)
12	8" (200) SOLID (WHITE)
13	6" (150) LANE LINE EXTENSIONS (WHITE)

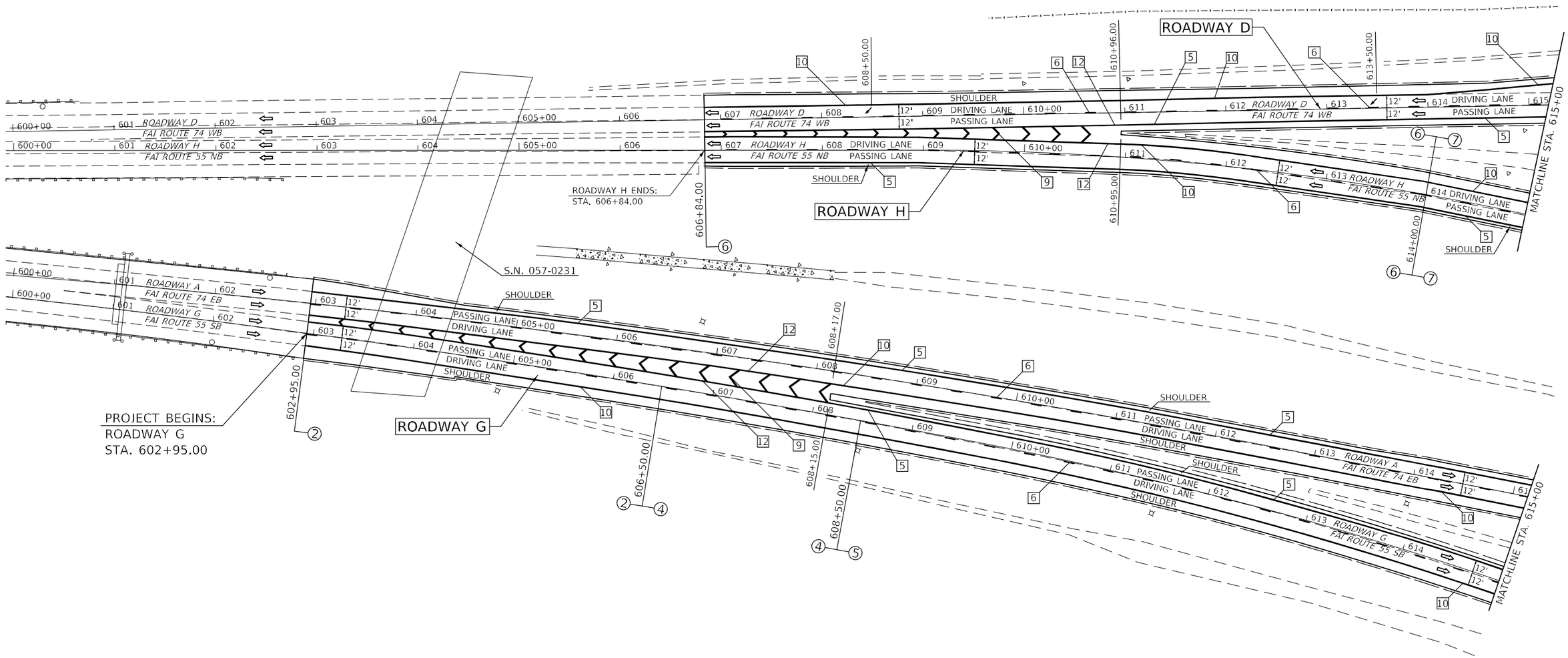

USER NAME = Greg.Eaglin	DESIGNED -	REVISED -	
	DRAWN -	REVISED -	
PLOT SCALE = 100.0000 ' / in.	CHECKED -	REVISED -	
PLOT DATE = 1/25/2023	DATE -	REVISED -	

STATE OF ILLINOIS
DEPARTMENT OF TRANSPORTATION

PAVEMENT MARKING PLAN SHEET
FAI – 55 / ROADWAY G (SB) & ROADWAY H (NB)

SCALE: | SHEET 11 OF 21 SHEETS | STA. 600+00.00 TO STA. 615+00.00 G

F.A.I. RTE.	SECTION	COUNTY	TOTAL SHEETS	SHEET NO.
74A	**	MCLEAN	93	70
	(57-7)RS-3,(57-20)RS-4	CONTRACT NO. 70G08		
		ILLINOIS	FED. AID PROJECT	

MODEL: $MODEL NAMES
FILE NAME: pw:\\ildot-pw.bentley.com:PWIDOT\Documents\IDOT Offices\District 5\Projects\D570G08\CADData\CADSheets\D570G08-sht-Pave Marking.dgn

TYPICAL PAVEMENT MARKING LEGEND

1. 4" (100) SKIP-DASH (YELLOW)
2. 4" (100) SOLID (YELLOW)
3. 12" (300) DIAGONAL (YELLOW)
4. 4" (100) DOUBLE YELLOW (NARROW)
5. 6" (150) SOLID (YELLOW)
6. 6" (150) SKIP-DASH (WHITE)
7. 4" (100) SKIP-DASH (WHITE)
8. 4" (100 SOLID (WHITE)
9. 12" (300) DIAGONAL (WHITE)
10. 6" (150) SOLID (WHITE)
11. 24" (600) STOP BAR (WHITE)
12. 8" (200) SOLID (WHITE)
13. 6" (150) LANE LINE EXTENSIONS (WHITE)

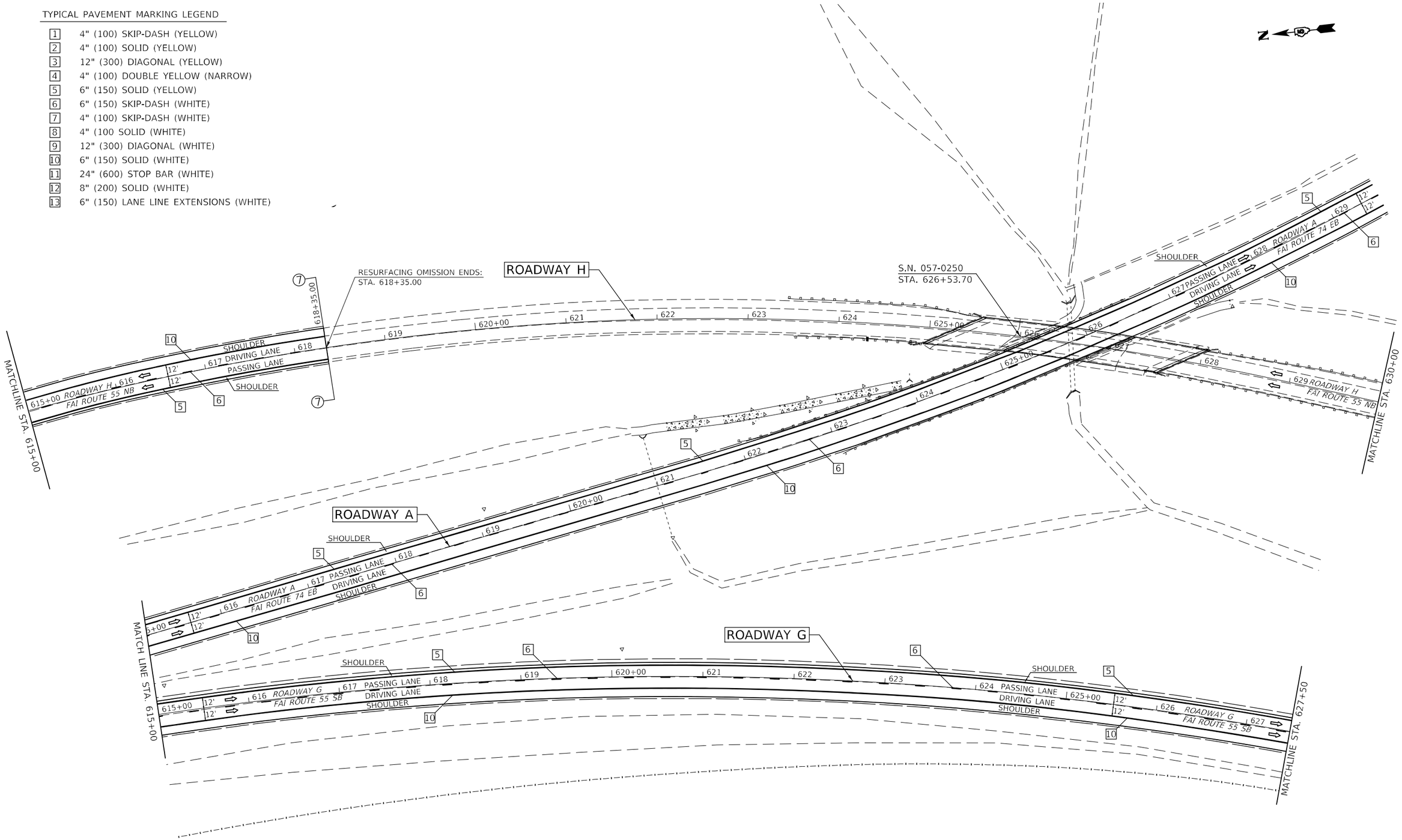

USER NAME = Greg.Eaglin	DESIGNED -	REVISED -	STATE OF ILLINOIS DEPARTMENT OF TRANSPORTATION
	DRAWN -	REVISED -	
PLOT SCALE = 100.0000 ' / in.	CHECKED -	REVISED -	
PLOT DATE = 1/25/2023	DATE -	REVISED -	

PAVEMENT MARKING PLAN SHEET
FAI – 55 / ROADWAY G (SB) & ROADWAY H (NB)

SCALE: | SHEET 12 OF 21 SHEETS | STA. 615+00.00 G TO STA. 627+50.00 G

F.A.I. RTE.	SECTION	COUNTY	TOTAL SHEETS	SHEET NO.
74A	**	MCLEAN	93	71
** (57-7)RS-3,(57-20)RS-4		CONTRACT NO. 70G08		
		ILLINOIS	FED. AID PROJECT	

MODEL: $MODEL NAMES
FILE NAME: pw:\\ildot-pw.bentley.com:PWIDOT\Documents\IDOT Offices\District 5\Projects\D570G08\CADData\CAD\Sheets\D570G08-sht-Pave Marking.dgn

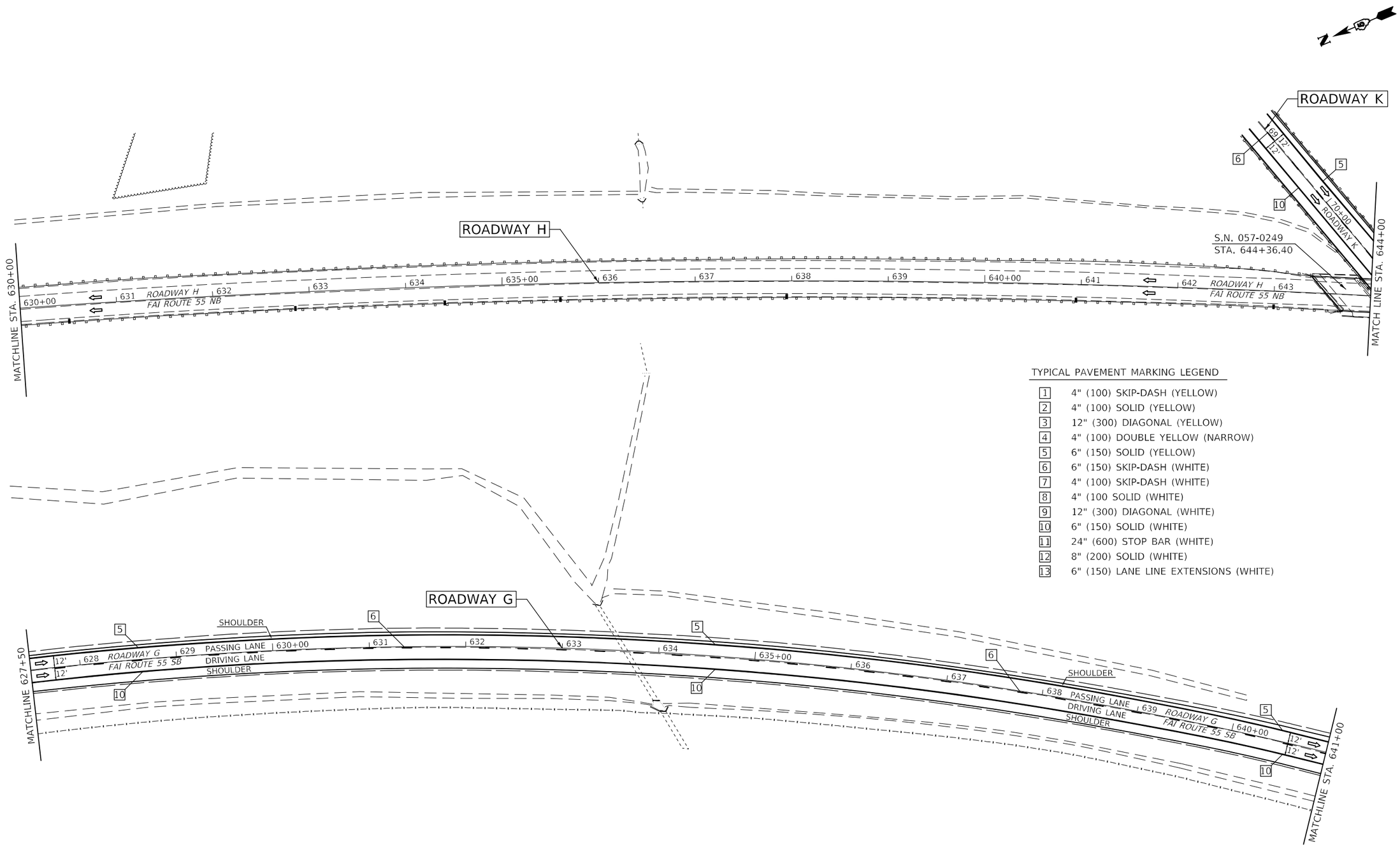

TYPICAL PAVEMENT MARKING LEGEND

1	4" (100) SKIP-DASH (YELLOW)
2	4" (100) SOLID (YELLOW)
3	12" (300) DIAGONAL (YELLOW)
4	4" (100) DOUBLE YELLOW (NARROW)
5	6" (150) SOLID (YELLOW)
6	6" (150) SKIP-DASH (WHITE)
7	4" (100) SKIP-DASH (WHITE)
8	4" (100 SOLID (WHITE)
9	12" (300) DIAGONAL (WHITE)
10	6" (150) SOLID (WHITE)
11	24" (600) STOP BAR (WHITE)
12	8" (200) SOLID (WHITE)
13	6" (150) LANE LINE EXTENSIONS (WHITE)

MODEL: $MODELNAME$
FILE NAME: pw:\\ildot-pw.bentley.com:PwIDOT\Documents\IDOT Offices\District 5\Project\D570G08\CADData\CADsheets\D570G08-sht-Pavt Marking.dgn

USER NAME = Greg.Eaglin	DESIGNED -	REVISED -	
	DRAWN -	REVISED -	
PLOT SCALE = 100.0000 ' / in.	CHECKED -	REVISED -	
PLOT DATE = 1/25/2023	DATE -	REVISED -	

STATE OF ILLINOIS
DEPARTMENT OF TRANSPORTATION

PAVEMENT MARKING PLAN SHEET
FAI – 55 / ROADWAY G (SB) & ROADWAY H (NB)

SCALE: | SHEET 13 OF 21 SHEETS | STA. 627+50.00 G TO STA. 641+00.00 G

F.A.I. RTE.	SECTION	COUNTY	TOTAL SHEETS	SHEET NO.
74A	**	MCLEAN	93	72
** (57-7)RS-3,(57-20)RS-4		CONTRACT NO. 70G08		
		ILLINOIS	FED. AID PROJECT	

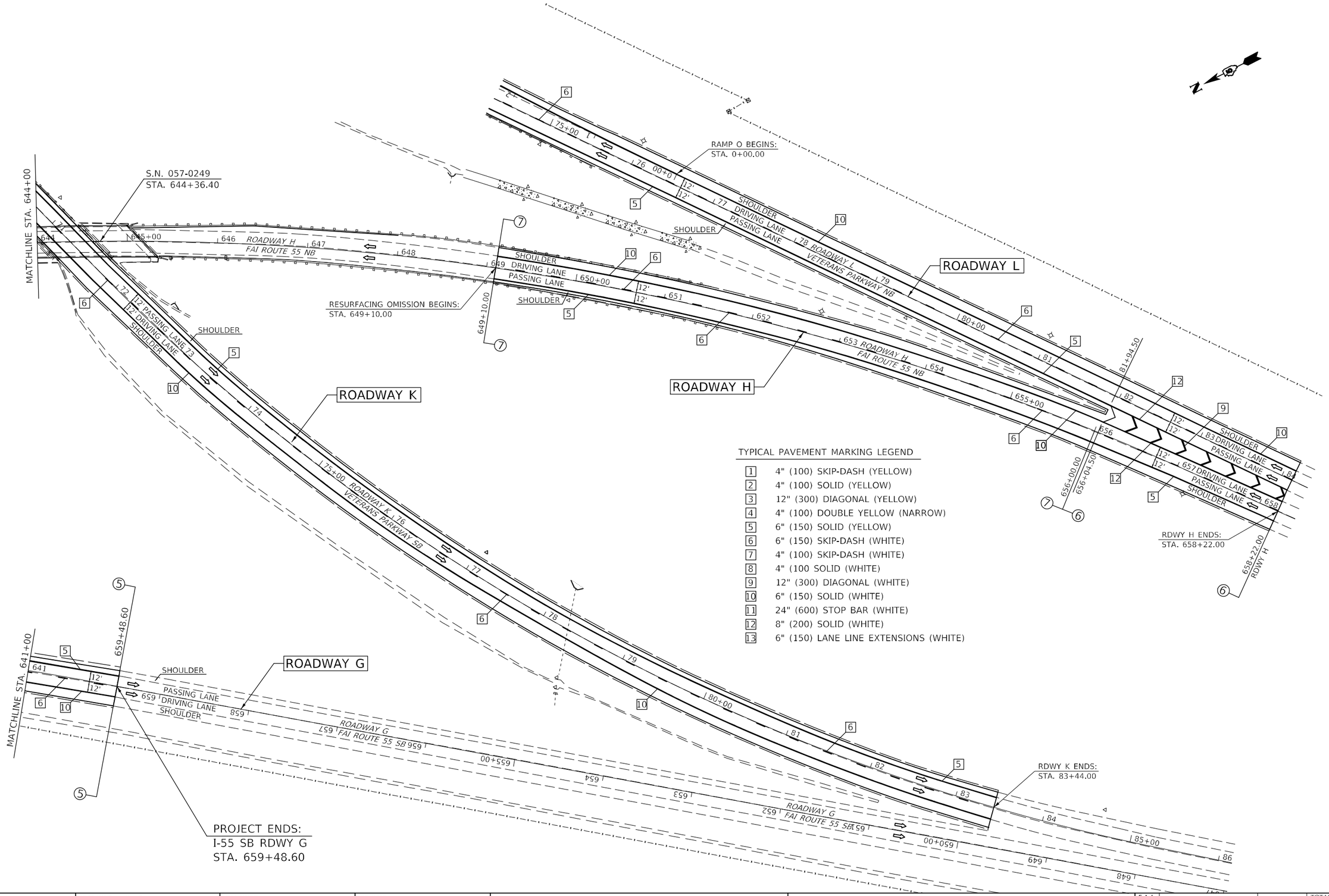

TYPICAL PAVEMENT MARKING LEGEND

1	4" (100) SKIP-DASH (YELLOW)
2	4" (100) SOLID (YELLOW)
3	12" (300) DIAGONAL (YELLOW)
4	4" (100) DOUBLE YELLOW (NARROW)
5	6" (150) SOLID (YELLOW)
6	6" (150) SKIP-DASH (WHITE)
7	4" (100) SKIP-DASH (WHITE)
8	4" (100 SOLID (WHITE)
9	12" (300) DIAGONAL (WHITE)
10	6" (150) SOLID (WHITE)
11	24" (600) STOP BAR (WHITE)
12	8" (200) SOLID (WHITE)
13	6" (150) LANE LINE EXTENSIONS (WHITE)

MODEL: $MODEL$NAMES
FILE NAME: pw:\\ildot-pw.bentley.com:PWIDOT\Documents\IDOT Offices\District 5\Projects\D570G08\CADData\CADSheets\D570G08-int-Pave Marking.dgn

USER NAME = Greg.Eaglin	DESIGNED -	REVISED -	
	DRAWN -	REVISED -	
PLOT SCALE = 100.0000 ' / in.	CHECKED -	REVISED -	
PLOT DATE = 1/25/2023	DATE -	REVISED -	

STATE OF ILLINOIS
DEPARTMENT OF TRANSPORTATION

PAVEMENT MARKING PLAN SHEET
FAI – 55 / ROADWAY G (SB) & ROADWAY H (NB)

SCALE: | SHEET 14 OF 21 SHEETS | STA. 641+00.00 G TO STA. 658+24.00 H

F.A.I. RTE.	SECTION	COUNTY	TOTAL SHEETS	SHEET NO.
74A	**	MCLEAN	93	73
*1 (57-7)RS-3,(57-20)RS-4		CONTRACT NO. 70G08		
		ILLINOIS	FED. AID PROJECT	

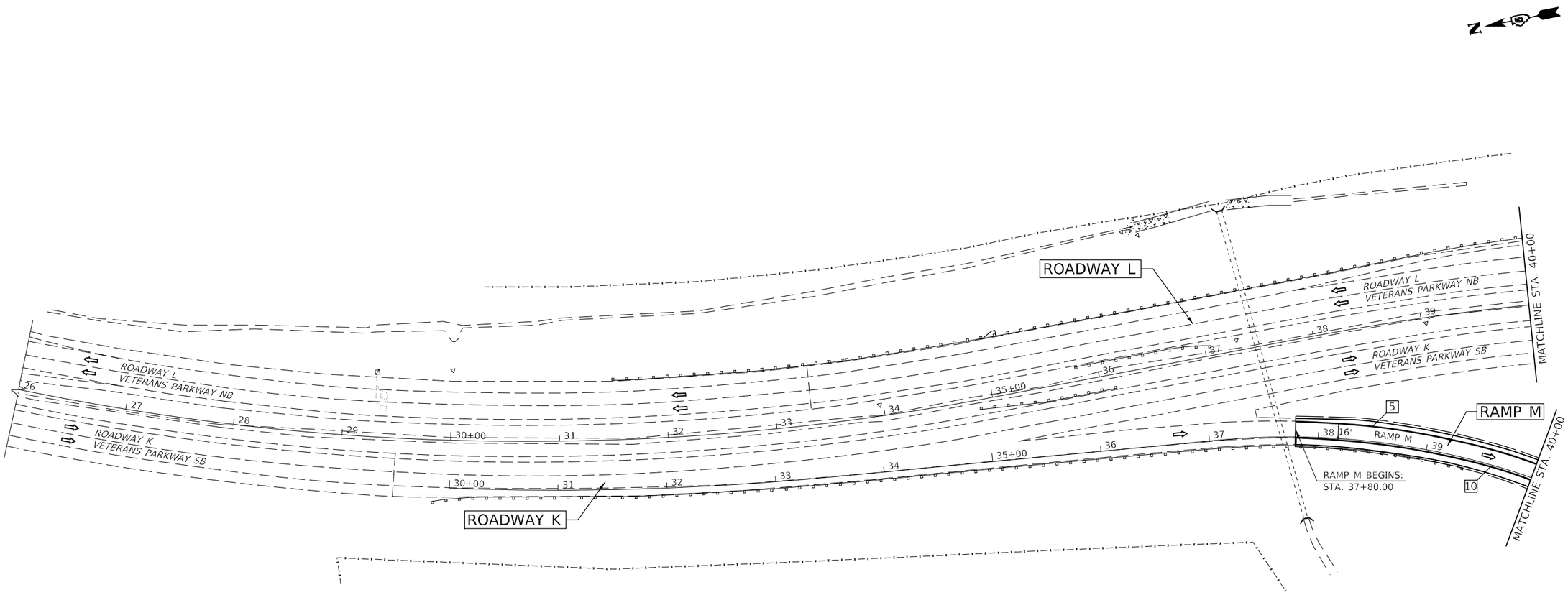

TYPICAL PAVEMENT MARKING LEGEND

1	4" (100) SKIP-DASH (YELLOW)
2	4" (100) SOLID (YELLOW)
3	12" (300) DIAGONAL (YELLOW)
4	4" (100) DOUBLE YELLOW (NARROW)
5	6" (150) SOLID (YELLOW)
6	6" (150) SKIP-DASH (WHITE)
7	4" (100) SKIP-DASH (WHITE)
8	4" (100 SOLID (WHITE)
9	12" (300) DIAGONAL (WHITE)
10	6" (150) SOLID (WHITE)
11	24" (600) STOP BAR (WHITE)
12	8" (200) SOLID (WHITE)
13	6" (150) LANE LINE EXTENSIONS (WHITE)

MODEL: $MODEL NAMES
FILE NAME: pw:\\ildot-pw.bentley.com:PWIDOT\Documents\IDOT Offices\District 5\Projects\D570G08\CADData\CADsheets\D570G08-sht-Pave Marking.dgn

USER NAME = Greg.Eaglin	DESIGNED -	REVISED -	
	DRAWN -	REVISED -	
PLOT SCALE = 100.0000 ' / in.	CHECKED -	REVISED -	
PLOT DATE = 1/25/2023	DATE -	REVISED -	

STATE OF ILLINOIS
DEPARTMENT OF TRANSPORTATION

PAVEMENT MARKING PLAN SHEET
VETERANS PARKWAY / ROADWAY K (SB) & ROADWAY L (NB)

SCALE: | SHEET 15 OF 21 SHEETS | STA. 26+00.00 TO STA. 40+00.00 NB

F.A.I. RTE.	SECTION	COUNTY	TOTAL SHEETS	SHEET NO.
74A	**	MCLEAN	93	74
** (57-7)RS-3,(57-20)RS-4		CONTRACT NO. 70G08		
		ILLINOIS	FED. AID PROJECT	

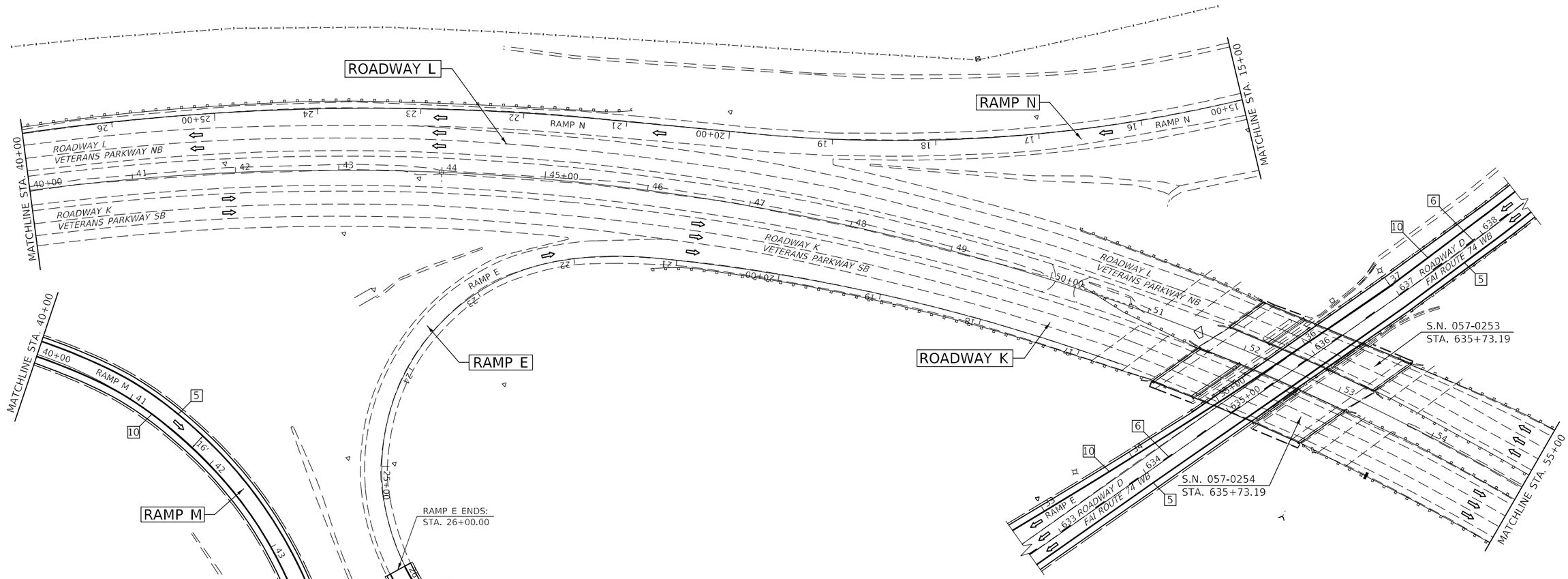

TYPICAL PAVEMENT MARKING LEGEND

1	4" (100) SKIP-DASH (YELLOW)
2	4" (100) SOLID (YELLOW)
3	12" (300) DIAGONAL (YELLOW)
4	4" (100) DOUBLE YELLOW (NARROW)
5	6" (150) SOLID (YELLOW)
6	6" (150) SKIP-DASH (WHITE)
7	4" (100) SKIP-DASH (WHITE)
8	4" (100 SOLID (WHITE)
9	12" (300) DIAGONAL (WHITE)
10	6" (150) SOLID (WHITE)
11	24" (600) STOP BAR (WHITE)
12	8" (200) SOLID (WHITE)
13	6" (150) LANE LINE EXTENSIONS (WHITE)

MODEL: $MODEL$NAME$
FILE NAME: pw:\\ildot-pw.bentley.com:PWIDOT\Documents\IDOT Offices\District 5\Project\D570G08\CADData\CADsheets\D570G08-sht-Pavt Marking.dgn

USER NAME = Greg.Eaglin	DESIGNED -	REVISED -
	DRAWN -	REVISED -
PLOT SCALE = 100.0000 ' / in.	CHECKED -	REVISED -
PLOT DATE = 1/25/2023	DATE -	REVISED -

STATE OF ILLINOIS
DEPARTMENT OF TRANSPORTATION

PAVEMENT MARKING PLAN SHEET
VETERANS PARKWAY / ROADWAY K (SB) & ROADWAY L (NB)

SCALE: | SHEET 16 OF 21 SHEETS | STA. 40+00.00 TO STA. 55+00.00 NB

F.A.I. RTE.	SECTION	COUNTY	TOTAL SHEETS	SHEET NO.
74A	**	MCLEAN	93	75
** (57-7)RS-3,(57-20)RS-4		CONTRACT NO. 70G08		
		ILLINOIS	FED. AID PROJECT	

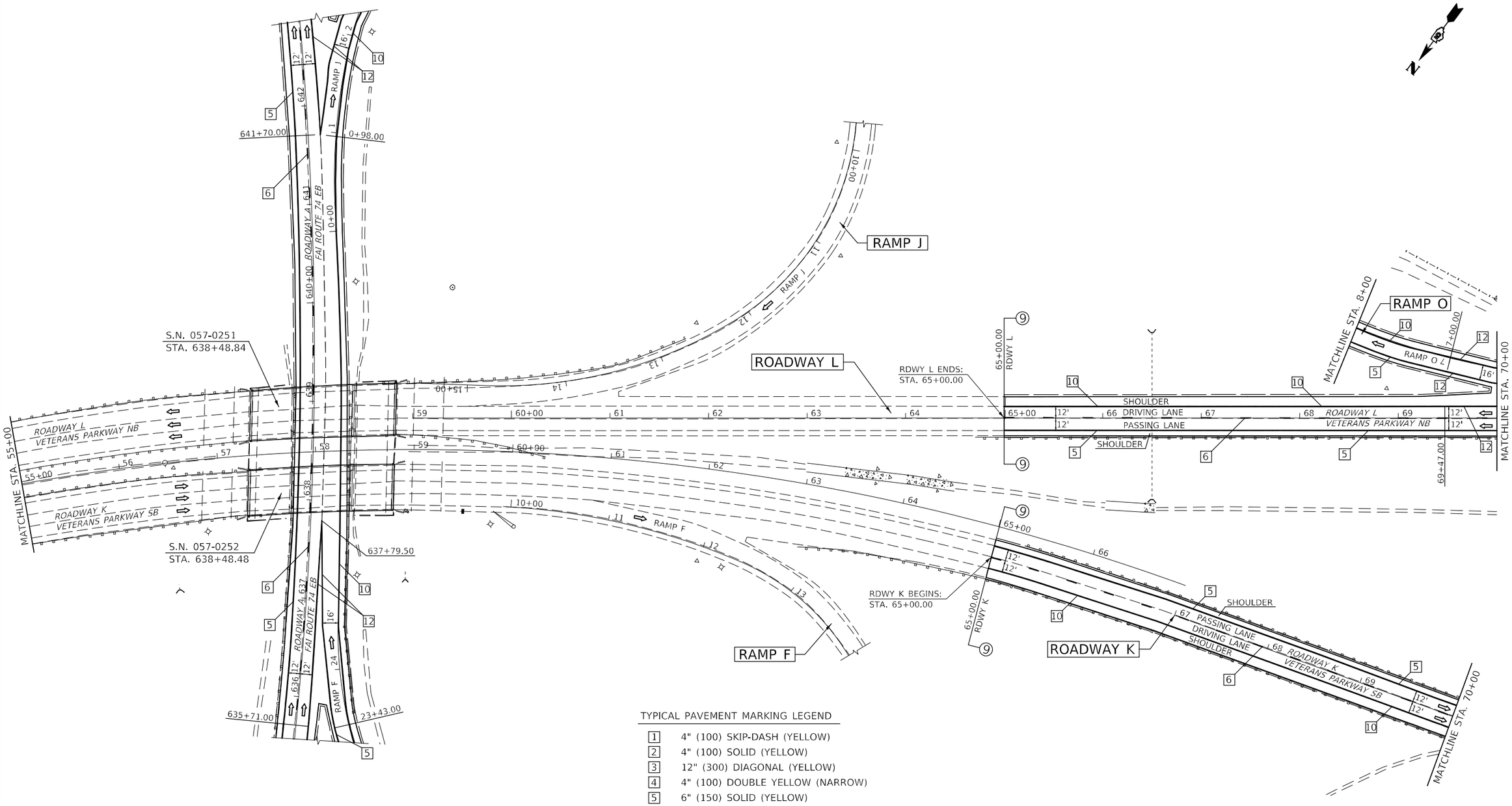

TYPICAL PAVEMENT MARKING LEGEND

1	4" (100) SKIP-DASH (YELLOW)
2	4" (100) SOLID (YELLOW)
3	12" (300) DIAGONAL (YELLOW)
4	4" (100) DOUBLE YELLOW (NARROW)
5	6" (150) SOLID (YELLOW)
6	6" (150) SKIP-DASH (WHITE)
7	4" (100) SKIP-DASH (WHITE)
8	4" (100 SOLID (WHITE)
9	12" (300) DIAGONAL (WHITE)
10	6" (150) SOLID (WHITE)
11	24" (600) STOP BAR (WHITE)
12	8" (200) SOLID (WHITE)
13	6" (150) LANE LINE EXTENSIONS (WHITE)

MODEL: $MODEL$NAME$
FILE NAME: pw:\\ildot-pw.bentley.com:PWIDOT\Documents\IDOT Offices\Districts $Project\D570G08\CADData\CAD sheets\D570G08-sht-Pavt Marking.dgn

USER NAME = Greg.Eaglin	DESIGNED -	REVISED -	
	DRAWN -	REVISED -	
PLOT SCALE = 100.0000 ' / in.	CHECKED -	REVISED -	
PLOT DATE = 1/25/2023	DATE -	REVISED -	

STATE OF ILLINOIS
DEPARTMENT OF TRANSPORTATION

PAVEMENT MARKING PLAN SHEET
VETERANS PARKWAY / ROADWAY K (SB) & ROADWAY L (NB)

SCALE: | SHEET 17 OF 21 SHEETS | STA. 55+00.00 TO STA. 70+00.00 NB

F.A.I. RTE.	SECTION	COUNTY	TOTAL SHEETS	SHEET NO.
74A	**	MCLEAN	93	76
**	(57-7)RS-3,(57-20)RS-4	CONTRACT NO. 70G08		
		ILLINOIS	FED. AID PROJECT	

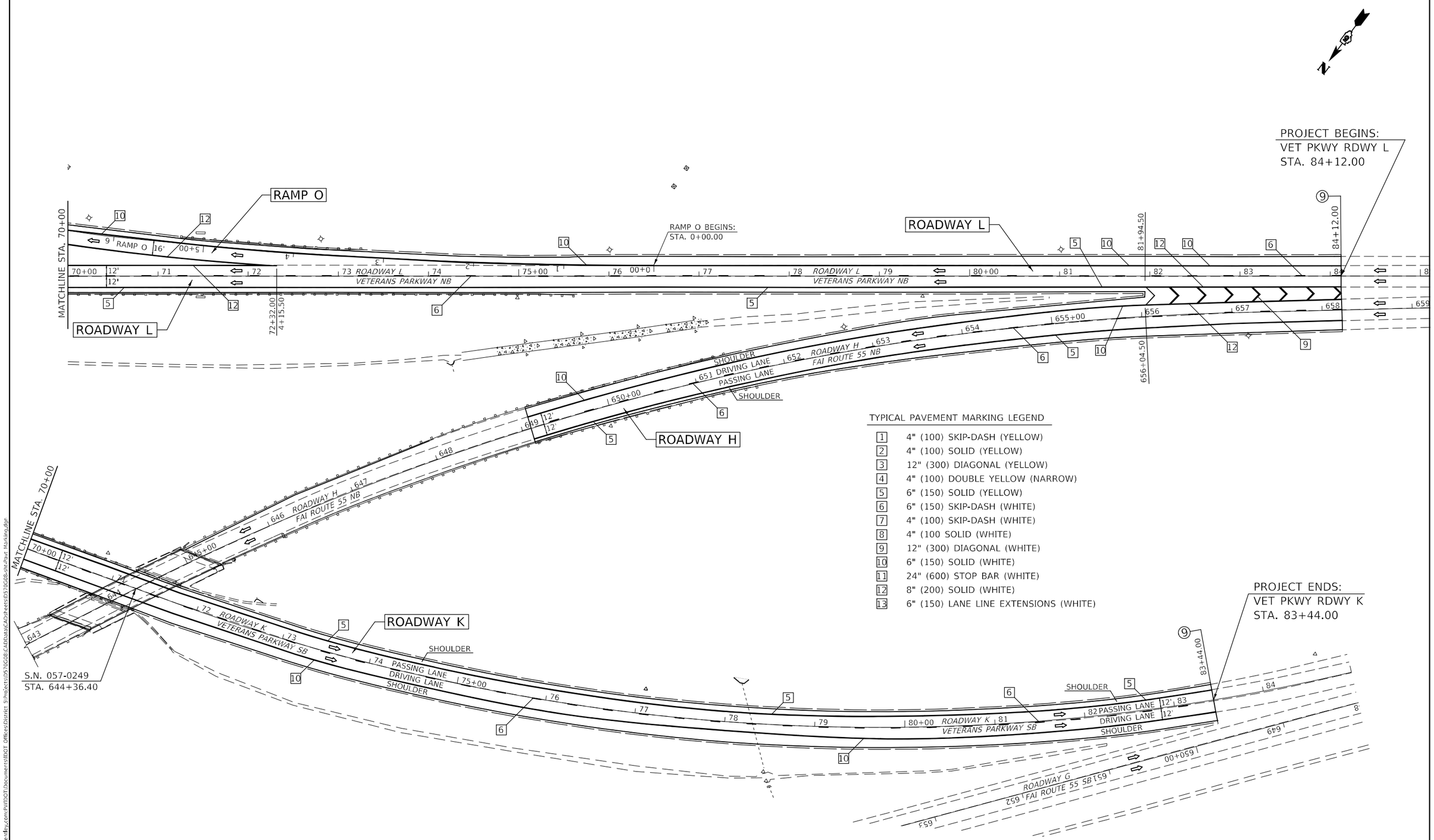

TYPICAL PAVEMENT MARKING LEGEND

1. 4" (100) SKIP-DASH (YELLOW)
2. 4" (100) SOLID (YELLOW)
3. 12" (300) DIAGONAL (YELLOW)
4. 4" (100) DOUBLE YELLOW (NARROW)
5. 6" (150) SOLID (YELLOW)
6. 6" (150) SKIP-DASH (WHITE)
7. 4" (100) SKIP-DASH (WHITE)
8. 4" (100 SOLID (WHITE)
9. 12" (300) DIAGONAL (WHITE)
10. 6" (150) SOLID (WHITE)
11. 24" (600) STOP BAR (WHITE)
12. 8" (200) SOLID (WHITE)
13. 6" (150) LANE LINE EXTENSIONS (WHITE)

MODEL: $MODELNAME$
FILE NAME: pw:\\ildot-pw.bentley.com:PWIDOT\Documents\IDOT Offices\District 5\Project\D570G08\CADData\CADsheets\D570G08-sht-Pavt Marking.dgn

USER NAME = Greg.Eaglin	DESIGNED -	REVISED -	
	DRAWN -	REVISED -	
PLOT SCALE = 100.0000 ' / in.	CHECKED -	REVISED -	
PLOT DATE = 1/25/2023	DATE -	REVISED -	

STATE OF ILLINOIS
DEPARTMENT OF TRANSPORTATION

PAVEMENT MARKING PLAN SHEET
VETERANS PARKWAY / ROADWAY K (SB) & ROADWAY L (NB)

SCALE: | SHEET 18 OF 21 SHEETS | STA. 70+00.00 NB TO STA. 84+12.00 NB

F.A.I. RTE.	SECTION	COUNTY	TOTAL SHEETS	SHEET NO.
74A	**	MCLEAN	93	77
** (57-7)RS-3,(57-20)RS-4		CONTRACT NO. 70G08		
		ILLINOIS	FED. AID PROJECT	

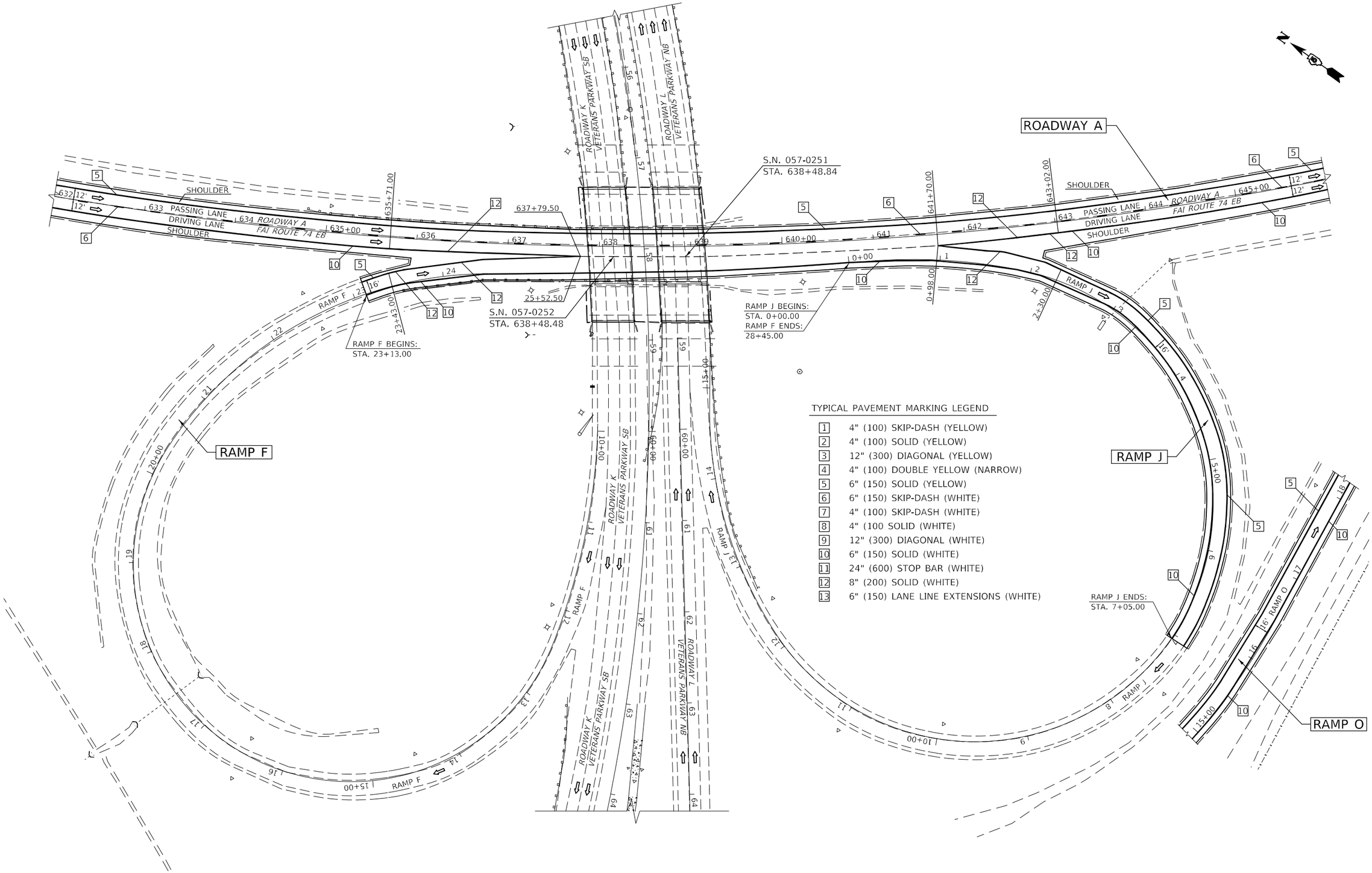

TYPICAL PAVEMENT MARKING LEGEND

1	4" (100) SKIP-DASH (YELLOW)
2	4" (100) SOLID (YELLOW)
3	12" (300) DIAGONAL (YELLOW)
4	4" (100) DOUBLE YELLOW (NARROW)
5	6" (150) SOLID (YELLOW)
6	6" (150) SKIP-DASH (WHITE)
7	4" (100) SKIP-DASH (WHITE)
8	4" (100 SOLID (WHITE)
9	12" (300) DIAGONAL (WHITE)
10	6" (150) SOLID (WHITE)
11	24" (600) STOP BAR (WHITE)
12	8" (200) SOLID (WHITE)
13	6" (150) LANE LINE EXTENSIONS (WHITE)

MODEL: $MODELNAMES
FILE NAME: pw:\\ildot-pw.bentley.com:PWIDOT\Documents\IDOT Offices\District 5\Projects\D570G08\CAD\Data\CAD\Sheets\D570G08-sht-Pavt Marking.dgn

USER NAME = Greg.Eaglin	DESIGNED -	REVISED -	
	DRAWN -	REVISED -	
PLOT SCALE = 100.0000 ' / in.	CHECKED -	REVISED -	
PLOT DATE = 1/25/2023	DATE -	REVISED -	

STATE OF ILLINOIS
DEPARTMENT OF TRANSPORTATION

PAVEMENT MARKING PLAN SHEET
FAI – 74 (EB) & VETERANS PARKWAY RAMP F & RAMP J

SCALE: | SHEET 19 OF 21 SHEETS | STA. TO STA.

F.A.I. RTE.	SECTION	COUNTY	TOTAL SHEETS	SHEET NO.
74A	**	MCLEAN	93	78
** (57-7)RS-3,(57-20)RS-4		CONTRACT NO. 70G08		
	ILLINOIS	FED. AID PROJECT		

TYPICAL PAVEMENT MARKING LEGEND

1	4" (100) SKIP-DASH (YELLOW)
2	4" (100) SOLID (YELLOW)
3	12" (300) DIAGONAL (YELLOW)
4	4" (100) DOUBLE YELLOW (NARROW)
5	6" (150) SOLID (YELLOW)
6	6" (150) SKIP-DASH (WHITE)
7	4" (100) SKIP-DASH (WHITE)
8	4" (100 SOLID (WHITE)
9	12" (300) DIAGONAL (WHITE)
10	6" (150) SOLID (WHITE)
11	24" (600) STOP BAR (WHITE)
12	8" (200) SOLID (WHITE)
13	6" (150) LANE LINE EXTENSIONS (WHITE)

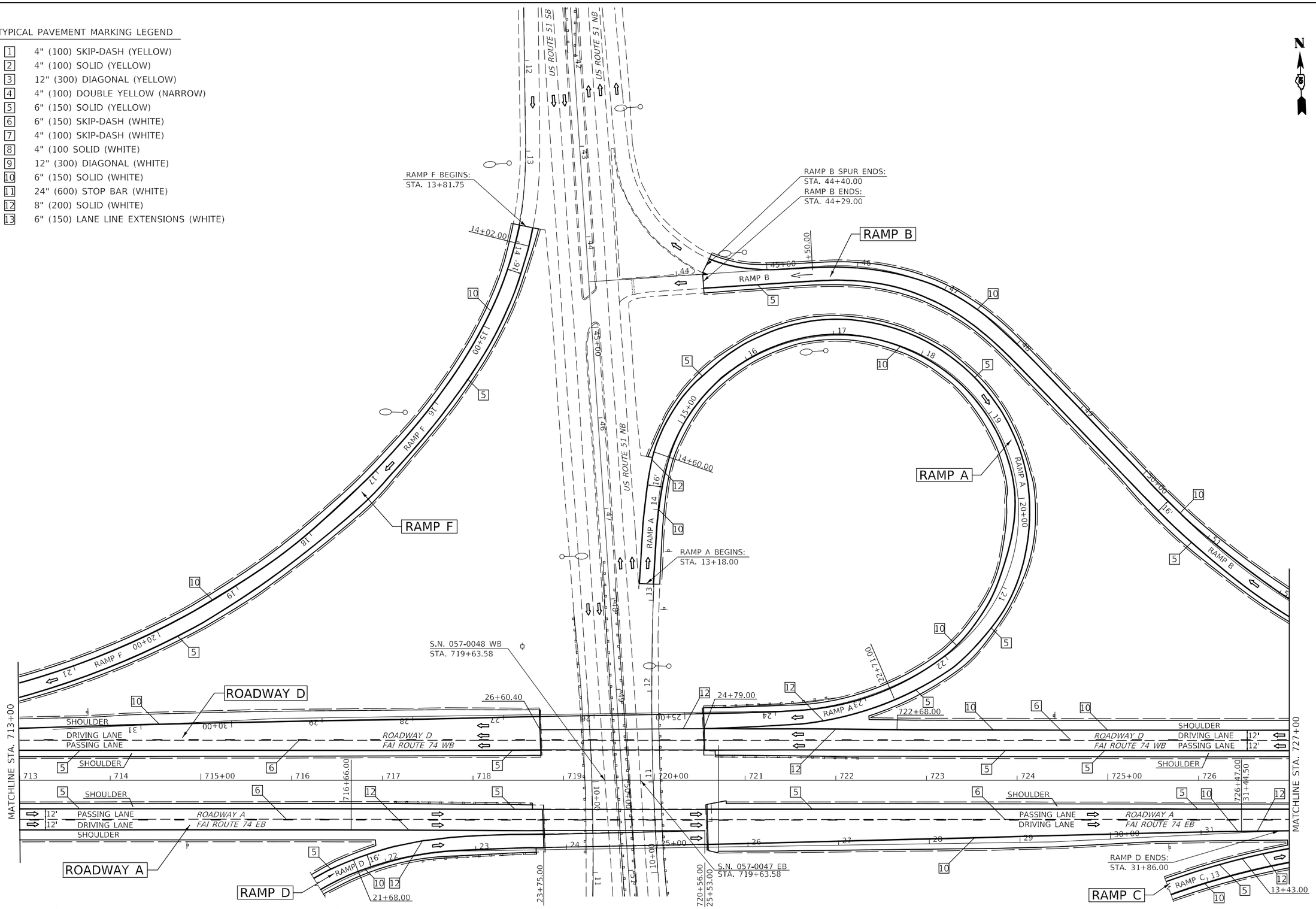

USER NAME = Greg.Eaglin	DESIGNED -	REVISED -	
	DRAWN -	REVISED -	
PLOT SCALE = 100.0000 ' / in.	CHECKED -	REVISED -	
PLOT DATE = 1/25/2023	DATE -	REVISED -	

STATE OF ILLINOIS
DEPARTMENT OF TRANSPORTATION

PAVEMENT MARKING PLAN SHEET
FAI – 74 (WB) & US 51 RAMP A, B, F

SCALE: | SHEET 20 OF 21 SHEETS | STA. 713+00.00 TO STA. 727+00.00 A

F.A.I. RTE.	SECTION	COUNTY	TOTAL SHEETS	SHEET NO.
74A	**	MCLEAN	93	79
	** (57-7)RS-3,(57-20)RS-4	CONTRACT NO. 70G08		
		ILLINOIS	FED. AID PROJECT	

MODEL: $MODEL$NAMES
FILE NAME: pw:\\ildot-pw.bentley.com:PWIDOT\Documents\IDOT Offices\District 5\Projects\D570G08\CADData\CADsheets\D570G08-sht-Pavt Marking.dgn

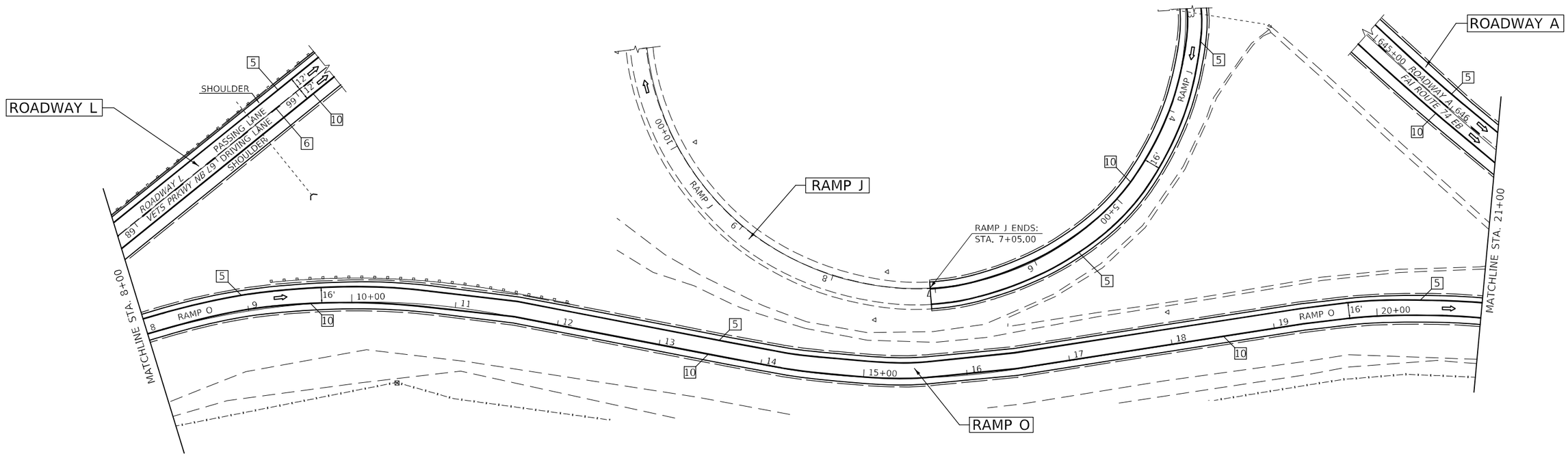

TYPICAL PAVEMENT MARKING LEGEND

1	4" (100) SKIP-DASH (YELLOW)
2	4" (100) SOLID (YELLOW)
3	12" (300) DIAGONAL (YELLOW)
4	4" (100) DOUBLE YELLOW (NARROW)
5	6" (150) SOLID (YELLOW)
6	6" (150) SKIP-DASH (WHITE)
7	4" (100) SKIP-DASH (WHITE)
8	4" (100 SOLID (WHITE)
9	12" (300) DIAGONAL (WHITE)
10	6" (150) SOLID (WHITE)
11	24" (600) STOP BAR (WHITE)
12	8" (200) SOLID (WHITE)
13	6" (150) LANE LINE EXTENSIONS (WHITE)

MODEL: $MODEL NAMES
FILE NAME: pw:\\ildot-pw.bentley.com:PWIDOT\Documents\IDOT Offices\District 5\Projects\D570G08\CADData\CAD\Sheets\D570G08-sht-Pave Marking.dgn

USER NAME = Greg.Eaglin	DESIGNED -	REVISED -	
	DRAWN -	REVISED -	
PLOT SCALE = 100.0000 ' / in.	CHECKED -	REVISED -	
PLOT DATE = 1/25/2023	DATE -	REVISED -	

STATE OF ILLINOIS
DEPARTMENT OF TRANSPORTATION

PAVEMENT MARKING PLAN SHEET
VETERANS PARKWAY CONNECTOR TO FAI – 74 (EB) RAMP O

SCALE: | SHEET 21 OF 21 SHEETS | STA. 8+00.00 TO STA. 21+00.00

F.A.I. RTE.	SECTION	COUNTY	TOTAL SHEETS	SHEET NO.
74A	**	MCLEAN	93	80
** (57-7)RS-3,(57-20)RS-4		CONTRACT NO. 70G08		
		ILLINOIS	FED. AID PROJECT	

REAL TIME TRAFFIC CONTROL SYSTEM
I–74 WESTBOUND

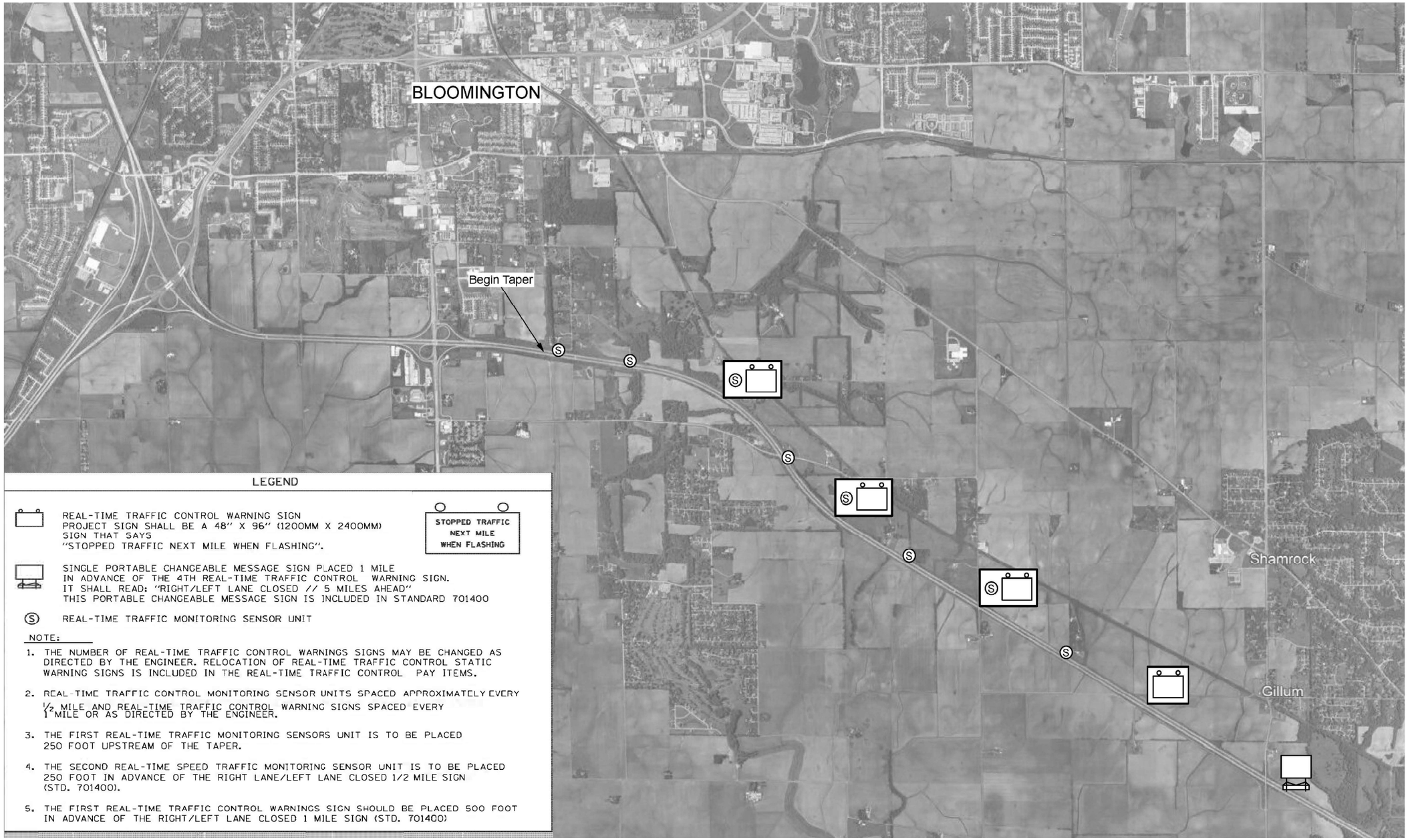

LEGEND

REAL-TIME TRAFFIC CONTROL WARNING SIGN
PROJECT SIGN SHALL BE A 48" X 96" (1200MM X 2400MM)
SIGN THAT SAYS
"STOPPED TRAFFIC NEXT MILE WHEN FLASHING".

STOPPED TRAFFIC
NEXT MILE
WHEN FLASHING

SINGLE PORTABLE CHANGEABLE MESSAGE SIGN PLACED 1 MILE IN ADVANCE OF THE 4TH REAL-TIME TRAFFIC CONTROL WARNING SIGN.
IT SHALL READ: "RIGHT/LEFT LANE CLOSED // 5 MILES AHEAD"
THIS PORTABLE CHANGEABLE MESSAGE SIGN IS INCLUDED IN STANDARD 701400

(S) REAL-TIME TRAFFIC MONITORING SENSOR UNIT

NOTE:

1. THE NUMBER OF REAL-TIME TRAFFIC CONTROL WARNINGS SIGNS MAY BE CHANGED AS DIRECTED BY THE ENGINEER. RELOCATION OF REAL-TIME TRAFFIC CONTROL STATIC WARNING SIGNS IS INCLUDED IN THE REAL-TIME TRAFFIC CONTROL PAY ITEMS.
2. REAL-TIME TRAFFIC CONTROL MONITORING SENSOR UNITS SPACED APPROXIMATELY EVERY ½ MILE AND REAL-TIME TRAFFIC CONTROL WARNING SIGNS SPACED EVERY 1 MILE OR AS DIRECTED BY THE ENGINEER.
3. THE FIRST REAL-TIME TRAFFIC MONITORING SENSORS UNIT IS TO BE PLACED 250 FOOT UPSTREAM OF THE TAPER.
4. THE SECOND REAL-TIME SPEED TRAFFIC MONITORING SENSOR UNIT IS TO BE PLACED 250 FOOT IN ADVANCE OF THE RIGHT LANE/LEFT LANE CLOSED 1/2 MILE SIGN (STD. 701400).
5. THE FIRST REAL-TIME TRAFFIC CONTROL WARNINGS SIGN SHOULD BE PLACED 500 FOOT IN ADVANCE OF THE RIGHT/LEFT LANE CLOSED 1 MILE SIGN (STD. 701400)

MODEL: $MODELNAME$
FILE NAME: pw:\\ildot-pw.bentley.com:PWIDOT\Documents\IDOT Offices\District 5\Projects\D570G08\CADData\CADSheets\D570G08-int-RTTC.dgn

USER NAME = Greg.Eaglin	DESIGNED -	REVISED -	STATE OF ILLINOIS DEPARTMENT OF TRANSPORTATION
	DRAWN -	REVISED -	
PLOT SCALE = 40.0000 ' / in.	CHECKED -	REVISED -	
PLOT DATE = 1/25/2023	DATE -	REVISED -	

REAL TIME TRAFFIC CONTROL SYSTEM
I–74 WESTBOUND

SCALE: NONE | SHEET 1 OF 3 SHEETS | STA. | TO STA.

F.A.I. RTE.	SECTION	COUNTY	TOTAL SHEETS	SHEET NO.
74A	**	MCLEAN	93	81
		CONTRACT NO. 70G08		
		ILLINOIS FED. AID PROJECT		

** (57-7)RS-3,(57-20)RS-4

REAL TIME TRAFFIC CONTROL SYSTEM
I–55 NORTHBOUND

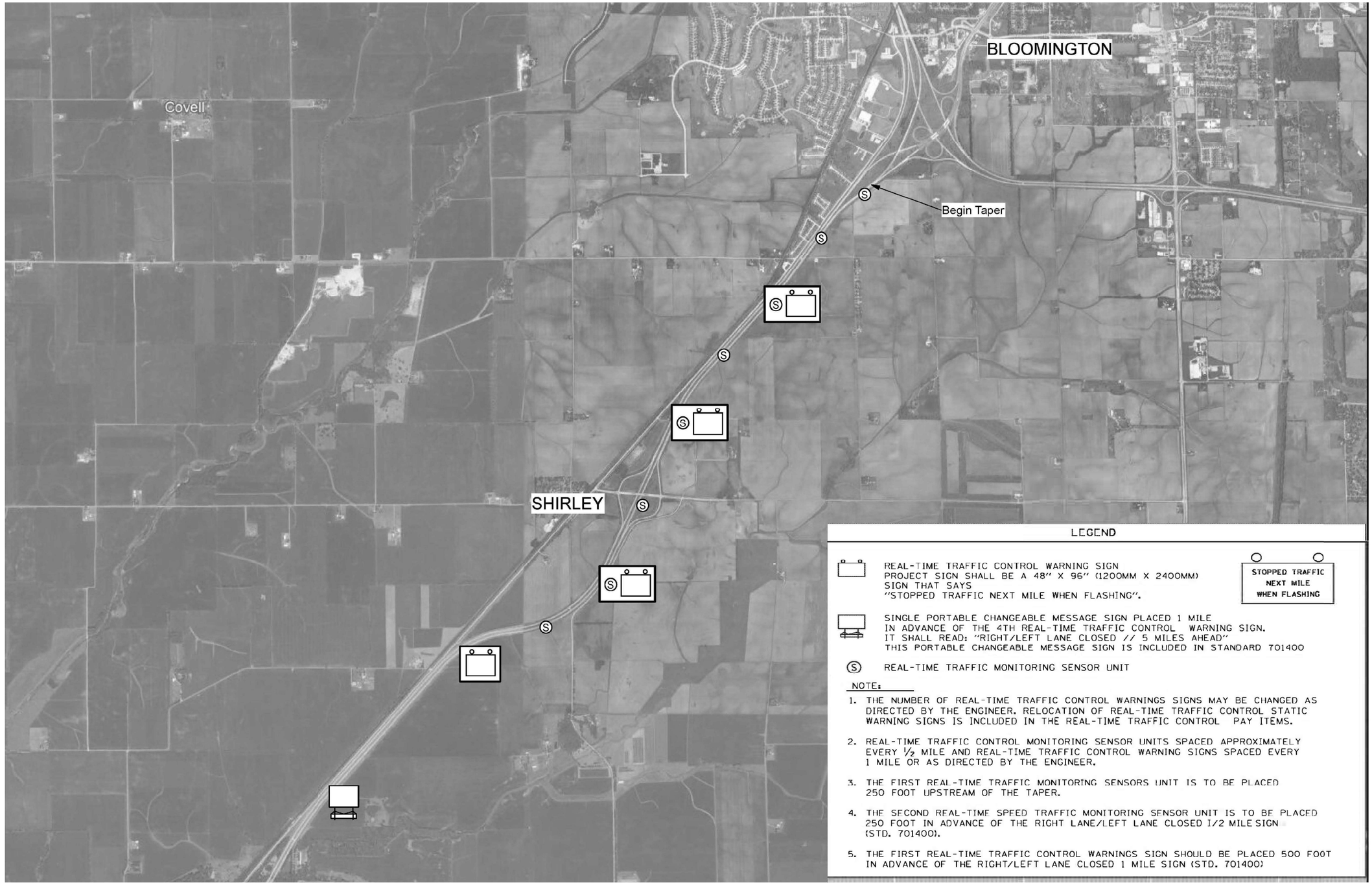

LEGEND

REAL-TIME TRAFFIC CONTROL WARNING SIGN
PROJECT SIGN SHALL BE A 48" X 96" (1200MM X 2400MM)
SIGN THAT SAYS
"STOPPED TRAFFIC NEXT MILE WHEN FLASHING".

STOPPED TRAFFIC
NEXT MILE
WHEN FLASHING

SINGLE PORTABLE CHANGEABLE MESSAGE SIGN PLACED 1 MILE
IN ADVANCE OF THE 4TH REAL-TIME TRAFFIC CONTROL WARNING SIGN.
IT SHALL READ: "RIGHT/LEFT LANE CLOSED // 5 MILES AHEAD"
THIS PORTABLE CHANGEABLE MESSAGE SIGN IS INCLUDED IN STANDARD 701400

(S) REAL-TIME TRAFFIC MONITORING SENSOR UNIT

NOTE:

1. THE NUMBER OF REAL-TIME TRAFFIC CONTROL WARNINGS SIGNS MAY BE CHANGED AS DIRECTED BY THE ENGINEER. RELOCATION OF REAL-TIME TRAFFIC CONTROL STATIC WARNING SIGNS IS INCLUDED IN THE REAL-TIME TRAFFIC CONTROL PAY ITEMS.
2. REAL-TIME TRAFFIC CONTROL MONITORING SENSOR UNITS SPACED APPROXIMATELY EVERY 1/2 MILE AND REAL-TIME TRAFFIC CONTROL WARNING SIGNS SPACED EVERY 1 MILE OR AS DIRECTED BY THE ENGINEER.
3. THE FIRST REAL-TIME TRAFFIC MONITORING SENSORS UNIT IS TO BE PLACED 250 FOOT UPSTREAM OF THE TAPER.
4. THE SECOND REAL-TIME SPEED TRAFFIC MONITORING SENSOR UNIT IS TO BE PLACED 250 FOOT IN ADVANCE OF THE RIGHT LANE/LEFT LANE CLOSED 1/2 MILE SIGN (STD. 701400).
5. THE FIRST REAL-TIME TRAFFIC CONTROL WARNINGS SIGN SHOULD BE PLACED 500 FOOT IN ADVANCE OF THE RIGHT/LEFT LANE CLOSED 1 MILE SIGN (STD. 701400)

MODEL: $MODELNAME$
FILE NAME: pw:\\ildot-pw.bentley.com:PWIDOT\Documents\IDOT Offices\District 5\Projects\D570G08\CADData\CADSheets\D570G08-sht-RTTC.dgn

USER NAME = Greg.Eaglin	DESIGNED -	REVISED -	
	DRAWN -	REVISED -	
PLOT SCALE = 40.0000 ' / in.	CHECKED -	REVISED -	
PLOT DATE = 1/25/2023	DATE -	REVISED -	

STATE OF ILLINOIS
DEPARTMENT OF TRANSPORTATION

REAL TIME TRAFFIC CONTROL SYSTEM
I–55 NORTHBOUND

SCALE: NONE | SHEET 2 OF 3 SHEETS | STA. TO STA.

F.A.I. RTE.	SECTION	COUNTY	TOTAL SHEETS	SHEET NO.
74A	**	MCLEAN	93	82
		CONTRACT NO. 70G08		
	ILLINOIS	FED. AID PROJECT		

** (57-7)RS-3,(57-20)RS-4

REAL TIME TRAFFIC CONTROL SYSTEM
I–55 SOUTHBOUND / I–74 EASTBOUND

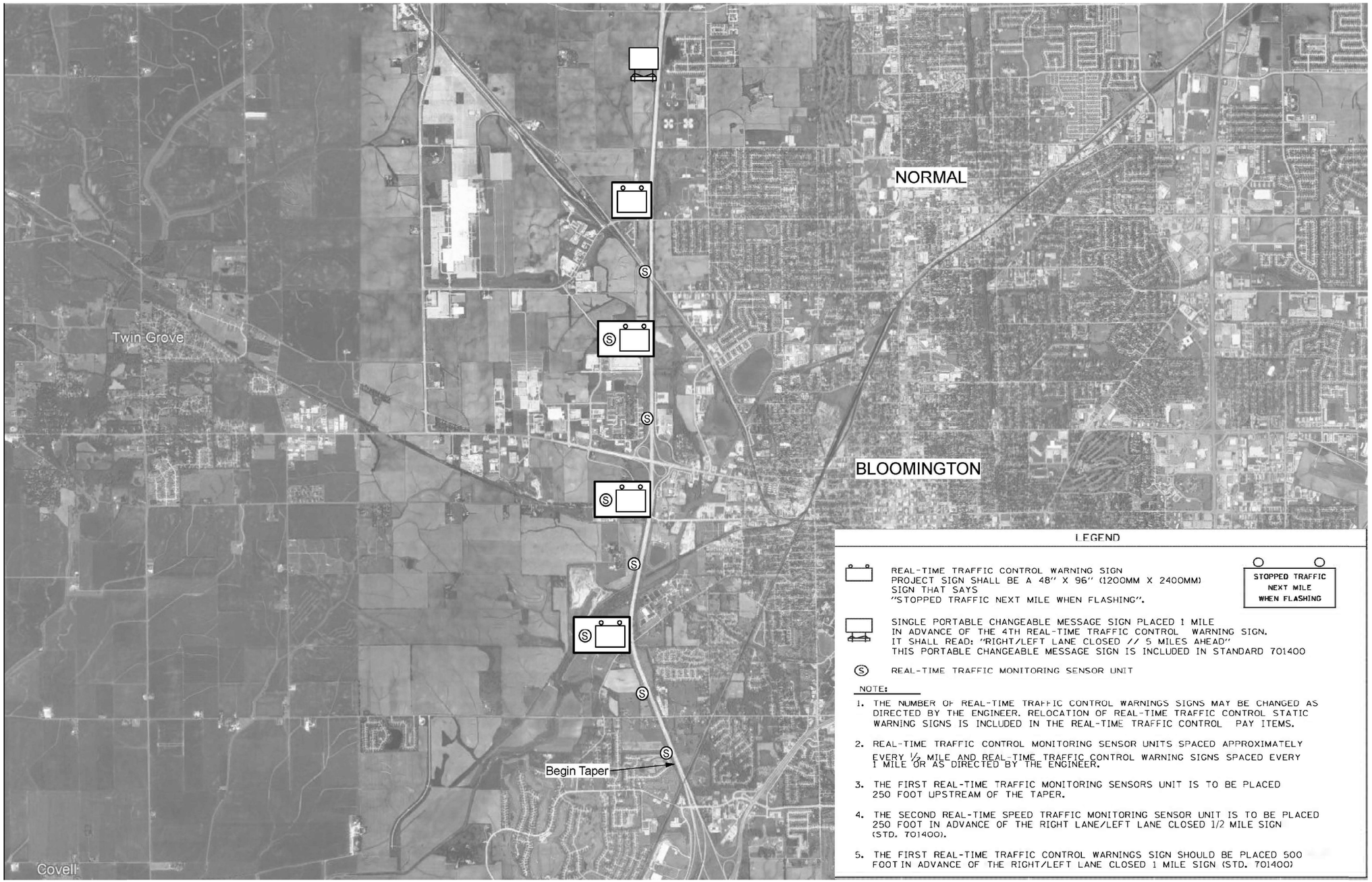

LEGEND

REAL-TIME TRAFFIC CONTROL WARNING SIGN
PROJECT SIGN SHALL BE A 48" X 96" (1200MM X 2400MM)
SIGN THAT SAYS
"STOPPED TRAFFIC NEXT MILE WHEN FLASHING".

STOPPED TRAFFIC
NEXT MILE
WHEN FLASHING

SINGLE PORTABLE CHANGEABLE MESSAGE SIGN PLACED 1 MILE IN ADVANCE OF THE 4TH REAL-TIME TRAFFIC CONTROL WARNING SIGN.
IT SHALL READ: "RIGHT/LEFT LANE CLOSED // 5 MILES AHEAD"
THIS PORTABLE CHANGEABLE MESSAGE SIGN IS INCLUDED IN STANDARD 701400

(S) REAL-TIME TRAFFIC MONITORING SENSOR UNIT

NOTE:

1. THE NUMBER OF REAL-TIME TRAFFIC CONTROL WARNINGS SIGNS MAY BE CHANGED AS DIRECTED BY THE ENGINEER. RELOCATION OF REAL-TIME TRAFFIC CONTROL STATIC WARNING SIGNS IS INCLUDED IN THE REAL-TIME TRAFFIC CONTROL PAY ITEMS.
2. REAL-TIME TRAFFIC CONTROL MONITORING SENSOR UNITS SPACED APPROXIMATELY EVERY ½ MILE AND REAL-TIME TRAFFIC CONTROL WARNING SIGNS SPACED EVERY 1 MILE OR AS DIRECTED BY THE ENGINEER.
3. THE FIRST REAL-TIME TRAFFIC MONITORING SENSORS UNIT IS TO BE PLACED 250 FOOT UPSTREAM OF THE TAPER.
4. THE SECOND REAL-TIME SPEED TRAFFIC MONITORING SENSOR UNIT IS TO BE PLACED 250 FOOT IN ADVANCE OF THE RIGHT LANE/LEFT LANE CLOSED 1/2 MILE SIGN (STD. 701400).
5. THE FIRST REAL-TIME TRAFFIC CONTROL WARNINGS SIGN SHOULD BE PLACED 500 FOOT IN ADVANCE OF THE RIGHT/LEFT LANE CLOSED 1 MILE SIGN (STD. 701400)

MODEL: $MODELNAME$
FILE NAME: pw:\\ildot-pw.bentley.com:PWIDOT\Documents\IDOT Offices\District 5\Projects\D570G08\CADData\CADSheets\D570G08-sht-RTTC.dgn

USER NAME = Greg.Eaglin	DESIGNED -	REVISED -	STATE OF ILLINOIS DEPARTMENT OF TRANSPORTATION
	DRAWN -	REVISED -	
PLOT SCALE = 40.0000 ' / in.	CHECKED -	REVISED -	
PLOT DATE = 1/25/2023	DATE -	REVISED -	

REAL TIME TRAFFIC CONTROL SYSTEM
I–55 SOUTHBOUND / I–74 EASTBOUND

SCALE: NONE | SHEET 3 OF 3 SHEETS | STA. | TO STA.

F.A.I. RTE.	SECTION	COUNTY	TOTAL SHEETS	SHEET NO.
74A	**	MCLEAN	93	83
		CONTRACT NO. 70G08		
	ILLINOIS	FED. AID PROJECT		

** (57-7)RS-3,(57-20)RS-4

I–55 NORTHBOUND TO I–74 EASTBOUND
RAMP CLOSURE DETOUR PLAN

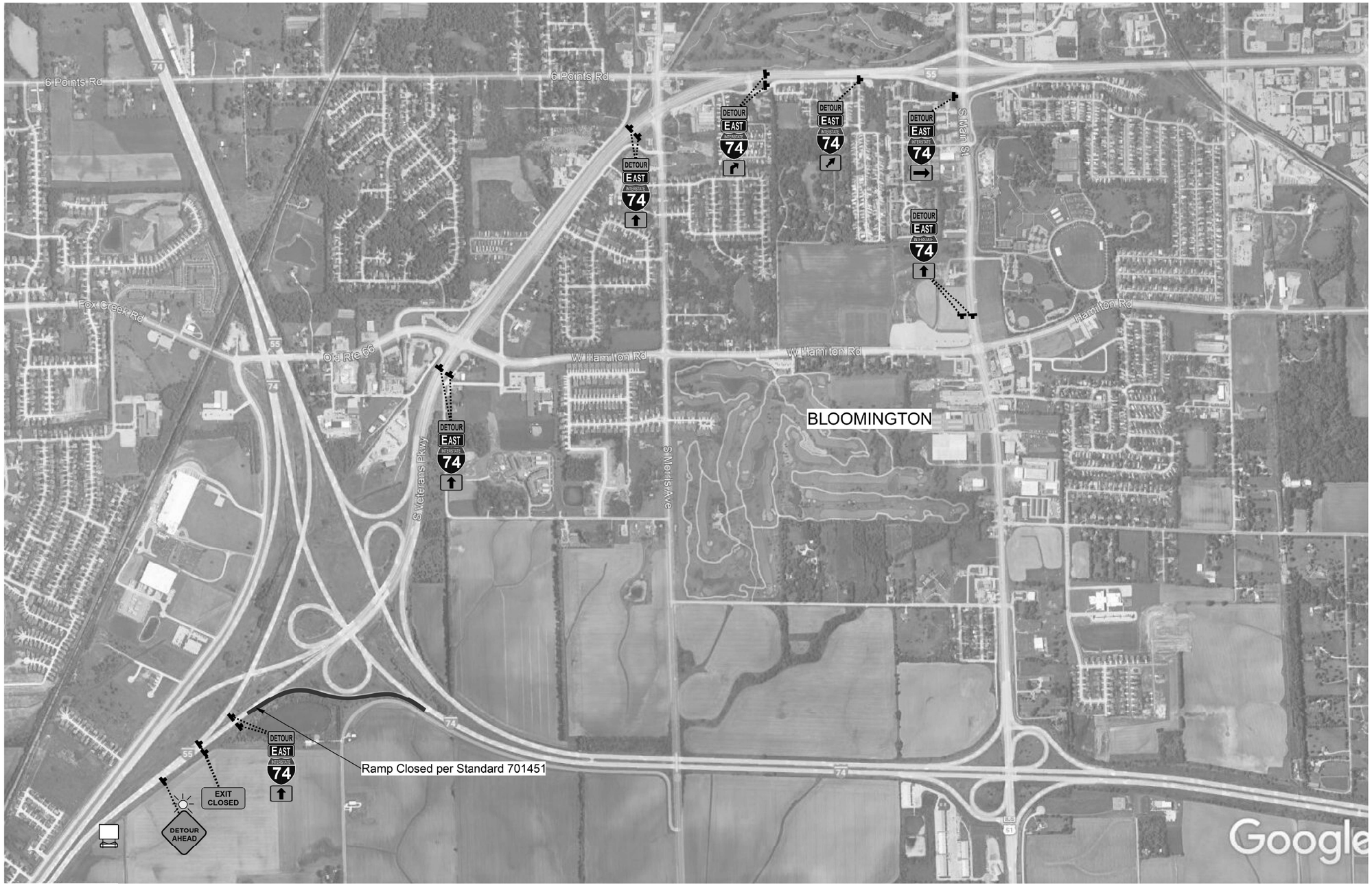

USER NAME = Greg.Eaglin	DESIGNED -	REVISED -	STATE OF ILLINOIS DEPARTMENT OF TRANSPORTATION
	DRAWN -	REVISED -	
PLOT SCALE = 40.0000 ' / in.	CHECKED -	REVISED -	
PLOT DATE = 1/25/2023	DATE -	REVISED -	

I–55 NORTHBOUND TO I–74 EASTBOUND
RAMP CLOSURE DETOUR PLAN

SCALE: NONE | SHEET 1 OF 4 SHEETS | STA. TO STA.

F.A.I. RTE.	SECTION	COUNTY	TOTAL SHEETS	SHEET NO.
74A	**	MCLEAN	93	84
		CONTRACT NO. 70G08		
	ILLINOIS	FED. AID PROJECT		

** (57-7)RS-3,(57-20)RS-4

MODEL: $MODELNAMES
FILE NAME: pw:\\ildot-pw.bentley.com:PWIDOT\Documents\IDOT Offices\District 5\Projects\D570G08\CADData\CAD\Sheets\D570G08-sht-RTTC.dgn

US 51 NORTHBOUND TO I–74 WESTBOUND
RAMP CLOSURE DETOUR PLAN

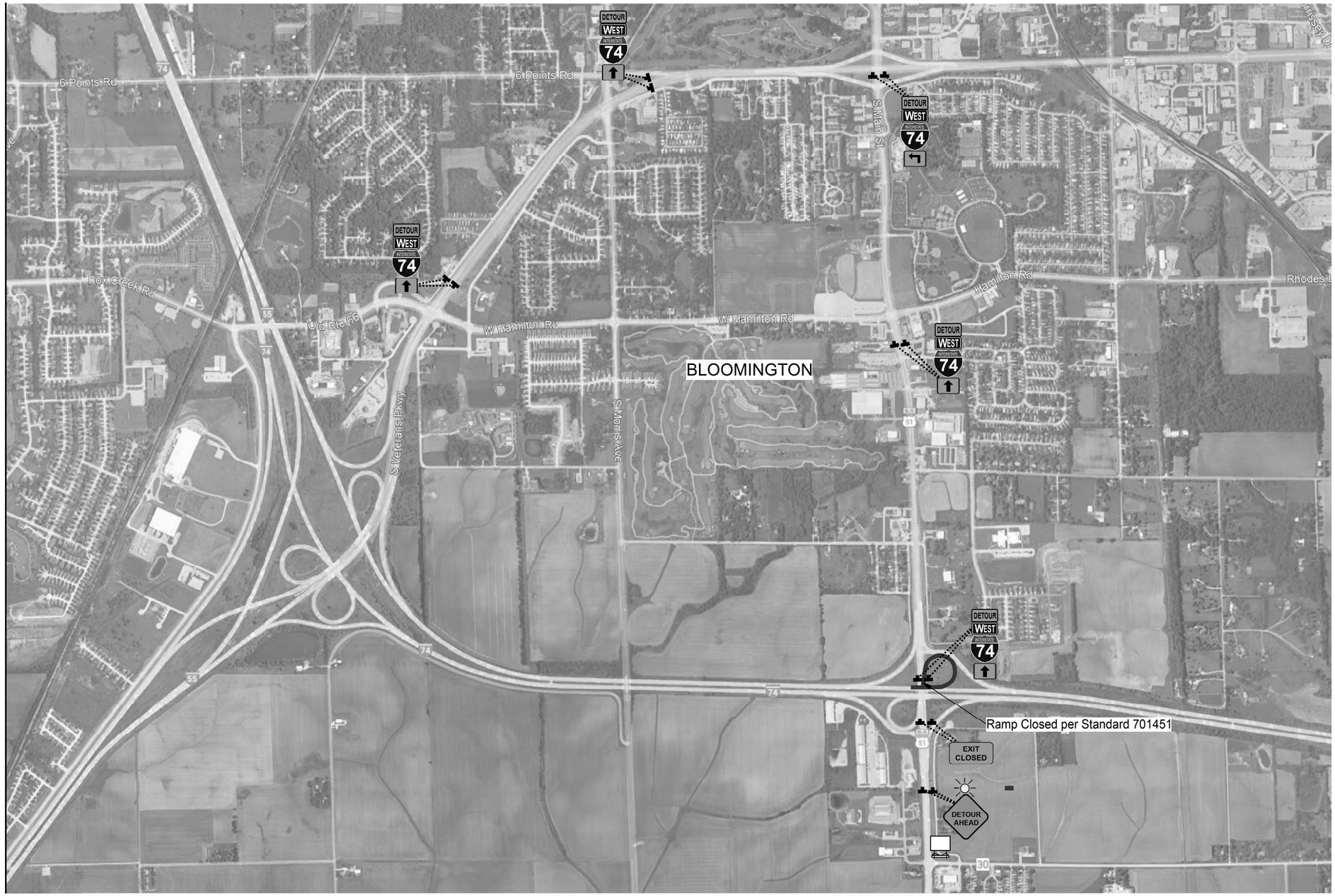

USER NAME = Greg.Eaglin	DESIGNED -	REVISED -	STATE OF ILLINOIS DEPARTMENT OF TRANSPORTATION
	DRAWN -	REVISED -	
PLOT SCALE = 40.0000 ' / in.	CHECKED -	REVISED -	
PLOT DATE = 1/25/2023	DATE -	REVISED -	

US 51 NORTHBOUND TO I–74 WESTBOUND
RAMP CLOSURE DETAIL PLAN

SCALE: | SHEET 2 OF 4 SHEETS | STA. TO STA.

F.A.I. RTE.	SECTION	COUNTY	TOTAL SHEETS	SHEET NO.
74A	**	MCLEAN	93	85
		CONTRACT NO. 70G08		
		ILLINOIS FED. AID PROJECT		

** (57-7)RS-3,(57-20)RS-4

MODEL: $MODELNAME$
FILE NAME: pw:\\ildot-pw.bentley.com:PWIDOT\Documents\IDOT Offices\District 5\Projects\D570G08\CADData\CADsheets\D570G08-sht-RTTC.dgn

US 51 SOUTHBOUND TO I–74 EASTBOUND
RAMP CLOSURE DETOUR PLAN

N

MODEL: $MODELNAME$
FILE NAME: pw:\\ildot-pw.bentley.com:PWIDOT\Documents\IDOT Offices\District 5\Projects\D570G08\CADData\CAD sheets\D570G08-sht-RTTC.dgn

USER NAME = Greg.Eaglin	DESIGNED -	REVISED -	STATE OF ILLINOIS DEPARTMENT OF TRANSPORTATION
	DRAWN -	REVISED -	
PLOT SCALE = 40.0000 ' / in.	CHECKED -	REVISED -	
PLOT DATE = 1/25/2023	DATE -	REVISED -	

US 51 SOUTHBOUND TO I–74 EASTBOUND
RAMP CLOSURE DETAIL PLAN

SCALE: | SHEET 3 OF 4 SHEETS | STA. TO STA.

F.A.I. RTE.	SECTION	COUNTY	TOTAL SHEETS	SHEET NO.
74A	**	MCLEAN	93	86
		CONTRACT NO. 70G08		
		ILLINOIS FED. AID PROJECT		

** (57-7)RS-3,(57-20)RS-4

US 51 SOUTHBOUND TO I–74 EASTBOUND
RAMP CLOSURE DETOUR PLAN (CONTINUED)

N

MODEL: $MODEL$NAME$
FILE NAME: pw:\\ildot-pw.bentley.com:PwIDOT\Documents\IDOT Offices\District 5\Projects\D570G08\CADData\CADsheets\D570G08-sht-RTTC.dgn

USER NAME = Greg.Eaglin	DESIGNED -	REVISED -	
	DRAWN -	REVISED -	
PLOT SCALE = 40.0000 ' / in.	CHECKED -	REVISED -	
PLOT DATE = 1/25/2023	DATE -	REVISED -	

STATE OF ILLINOIS
DEPARTMENT OF TRANSPORTATION

US 51 SOUTHBOUND TO I–74 EASTBOUND
RAMP CLOSURE DETAIL PLAN

SCALE: | SHEET 4 OF 4 SHEETS | STA. TO STA.

F.A.I. RTE.	SECTION	COUNTY	TOTAL SHEETS	SHEET NO.
74A	**	MCLEAN	93	87
		CONTRACT NO. 70G08		
		ILLINOIS FED. AID PROJECT		

** (57-7)RS-3,(57-20)RS-4

DETAIL FOR TEMPORARY RUMBLE STRIPS (SPECIAL)

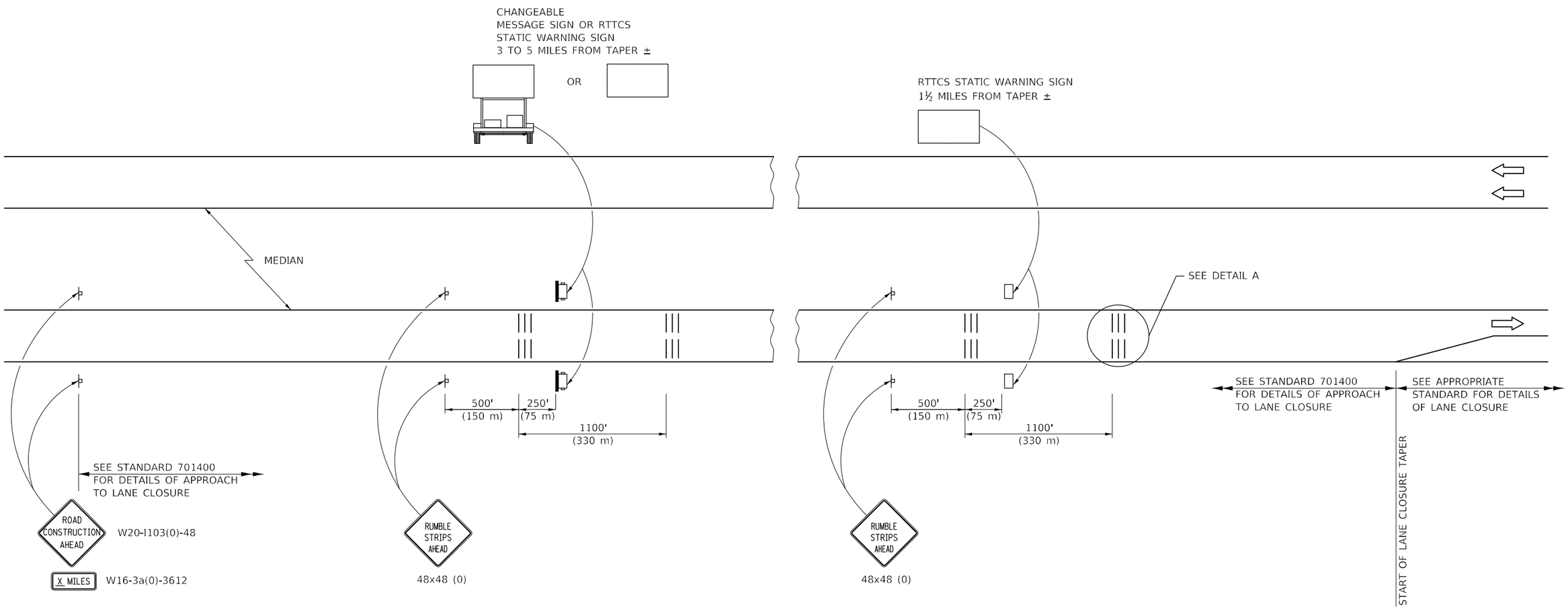

DETAIL A

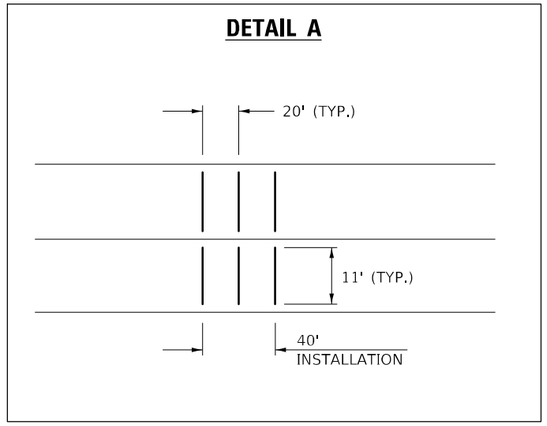

SYMBOLS

- SIGN
- TEMPORARY RUMBLE STRIPS (SPECIAL)
- TRAILER MOUNTED SIGN
- RTTCS STATIC WARNING SIGN

GENERAL NOTES

REMOVE THE TEMPORARY RUMBLE STRIPS (SPECIAL) PRIOR TO THE REMOVAL OF THE ADVANCED WARNING SIGNS.

ALL DIMENSIONS ARE IN INCHES (MILLIMETERS) UNLESS OTHERWISE SHOWN.

MODEL: $MODEL$NAME
FILE NAME: pw:\\ildot-pw.bentley.com:PWIDOT\Documents\IDOT Offices\District 5\Projects\D570G08\CADData\CADsheets\D570G08-int-Detail.dgn

USER NAME = Greg.Eaglin	DESIGNED -	REVISED -	STATE OF ILLINOIS DEPARTMENT OF TRANSPORTATION
	DRAWN -	REVISED -	
PLOT SCALE = 40.0000 ' / in.	CHECKED -	REVISED -	
PLOT DATE = 1/25/2023	DATE -	REVISED -	

DETAIL FOR TEMPORARY RUMBLE STRIPS (SPECIAL)

SCALE: NONE | SHEET 1 OF 1 SHEETS | STA. TO STA.

F.A.I. RTE.	SECTION	COUNTY	TOTAL SHEETS	SHEET NO.
74A	**	MCLEAN	93	88
		CONTRACT NO. 70G08		
	ILLINOIS	FED. AID PROJECT		

** (57-7)RS-3,(57-20)RS-4

DETAIL FOR MILLING & PAVING TRANSITION AT S.N. 057–0047 & S.N. 057–0048

STATION	TO	STATION	STATION	TO	STATION
717+47.45		718+77.45 (ROADWAY A)	717+43.80		718+73.80 (ROADWAY D)
720+58.68		721+88.68 (ROADWAY A)	720+54.90		721+84.90 (ROADWAY D)
22+45.00		23+75.00 (RAMP D)	23+49.00		24+79.00 (RAMP A)

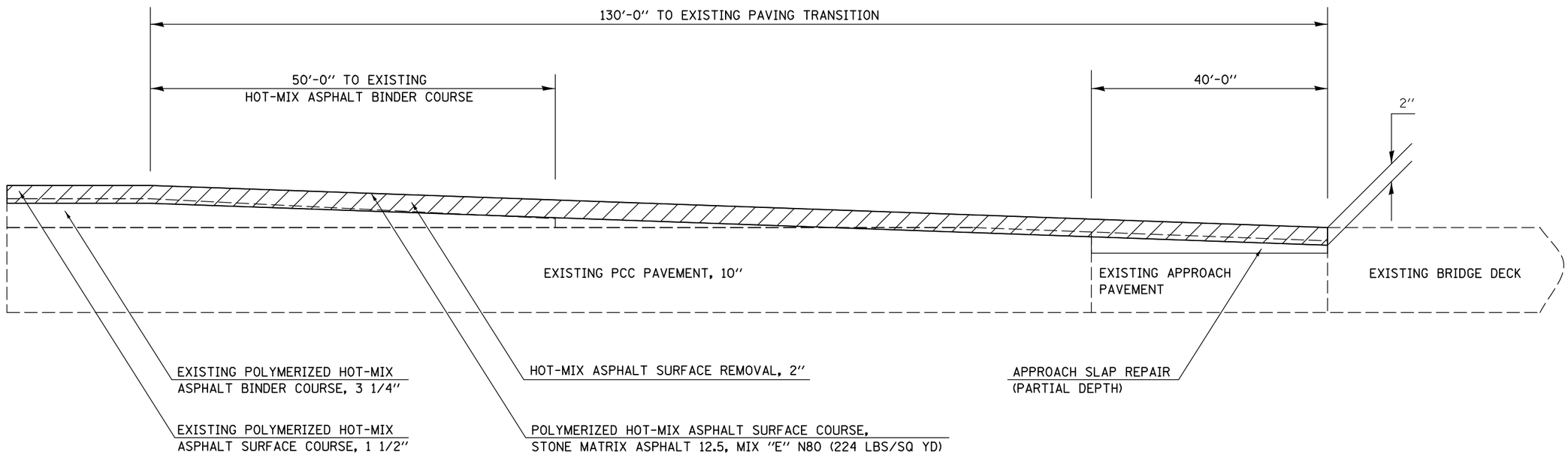

NOTE:
THE EXISTING HOT-MIX ASPHALT SURFACE COURSE SHALL BE MILLED 2" PRIOR TO APPROACH SLAB REPAIR (PARTIAL DEPTH). THIS WILL BE PAID FOR AS HOT-MIX ASPHALT SURFACE REMOVAL, 2" AND NO ADDTIONAL COMPENSATION WILL BE ALLOWED.
APPROACH SLAB REPAIRS (PARTIAL DEPTH) WILL THEN BE PERFORMED AS NEEDED ON THE EXISTING APPROACH PAVEMENT.

HOT-MIX ASPHALT SURFACE REMOVAL, 2"

MODEL: $MODELNAME$
FILE NAME: pw:\\ildot-pw.bentley.com:PWIDOT\Documents\IDOT Offices\District 5\Projects\D570G08\CADData\CADSheets\D570G08-sht-Details.dgn

USER NAME = Greg.Eaglin	DESIGNED -	REVISED -	STATE OF ILLINOIS DEPARTMENT OF TRANSPORTATION
	DRAWN -	REVISED -	
PLOT SCALE = 40.0000 ' / in.	CHECKED -	REVISED -	
PLOT DATE = 1/25/2023	DATE -	REVISED -	

DETAIL FOR MILLING AND PAVING TRANSITION AT S.N. 057–0047 & S.N. 057–0048

SCALE: | SHEET 1 OF 1 SHEETS | STA. TO STA.

F.A.I. RTE.	SECTION	COUNTY	TOTAL SHEETS	SHEET NO.
74A	**	MCLEAN	93	89
		CONTRACT NO. 70G08		
	ILLINOIS	FED. AID PROJECT		

** (57-7)RS-3,(57-20)RS-4

DETAIL OF BRIDGE APPROACH PAVEMENTS AT S.N. 057–0047 & S.N. 057–0058

(FOR INFORMATION ONLY)

DETAILS OF BRIDGE APPROACHES

FOR FEDERAL AID INTERSTATE ROUTES

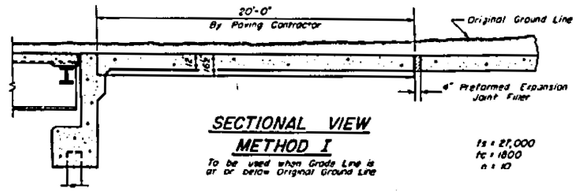

SECTIONAL VIEW METHOD I

To be used when Grade Line is at or below Original Ground Line

fs = 27,000
fc = 1800
n = 10

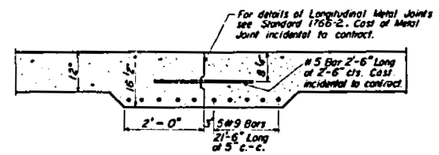

OPTIONAL LONGITUDINAL CONSTRUCTION JOINT

As approved by the Engineer, the Contractor may elect to reduce the widths of pour by use of the Optional Longitudinal Construction Joint shown. Joint shall be located at the edge of Traffic Lane.

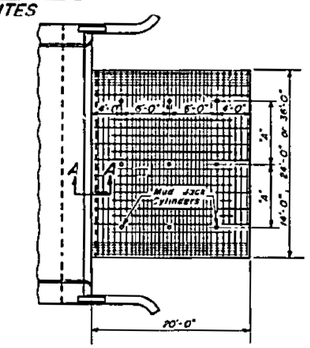

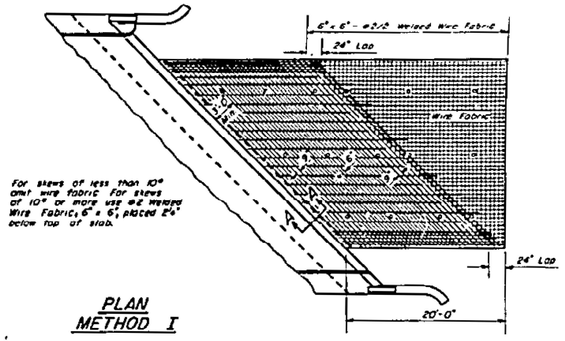

PLAN METHOD I

TABLE OF "A" DIMENSIONS

Width of Approach Slab	Dimension "A" (Spacing of Mud Jack Cylinders)
14'	6'-0"
24'	8'-0"
36'	2 Spaces at 8'-0"

Expanded Metal weighing not less than 78 Lbs. per 100 sq ft or a welded bar mat weighing not less than 78 Lbs per 100 sq ft having members of equal size in both directions and spaced not over 8" apart may be used instead of the #2 Welded Wire Fabric, 6" x 6", provided the expanded metal or bar mat is furnished at no additional cost to the State.

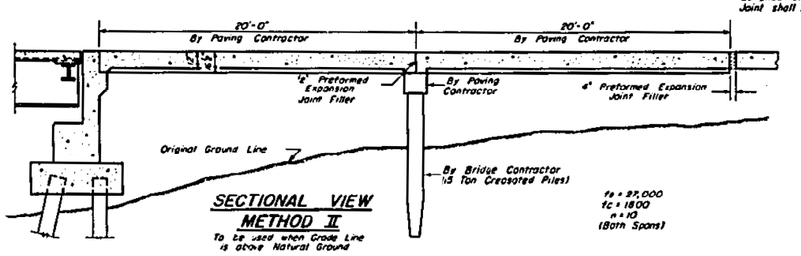

SECTIONAL VIEW METHOD II

To be used when Grade Line is above Natural Ground

fs = 27,000
fc = 1800
n = 10
(Both Spans)

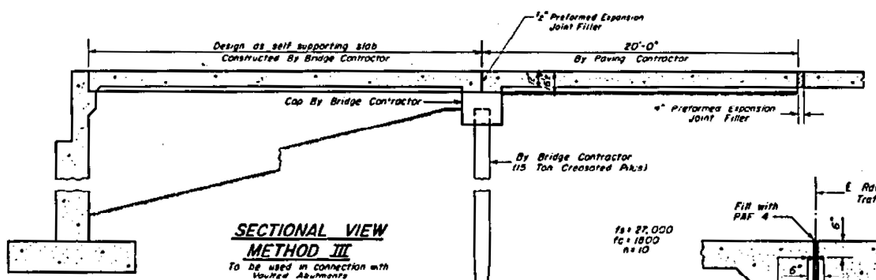

SECTIONAL VIEW METHOD III

To be used in connection with Vaulted Abutments

Note: Details of Approach Slab By Paving Contractor same as shown for Method I

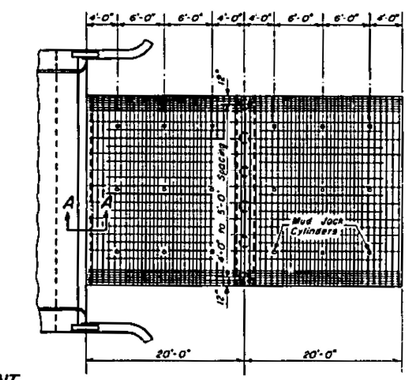

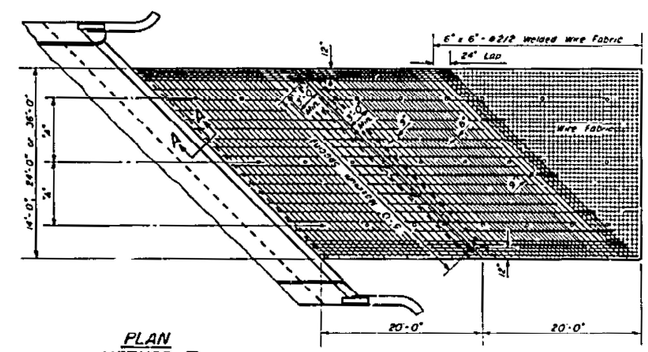

PLAN METHOD II

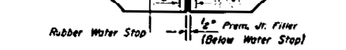

LONGITUDINAL EXPANSION JOINT

To be used when Approach Slabs are greater than 36'-0" wide. Joint shall be placed at edge of Traffic Lane nearest to the ℄ of the total width of Approach Slab.

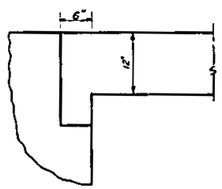

SECTION A-A

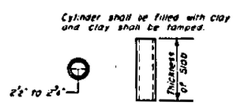

DETAIL OF MUD JACK CYLINDER

Cylinders shall be Standard Weight Black Steel Pipe

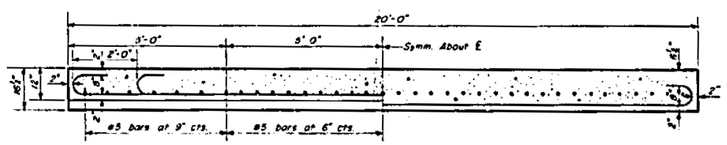

LONGITUDINAL SECTION THRU CENTER OF SLAB

LONGITUDINAL SECTION THRU THICKENED EDGE OF SLAB

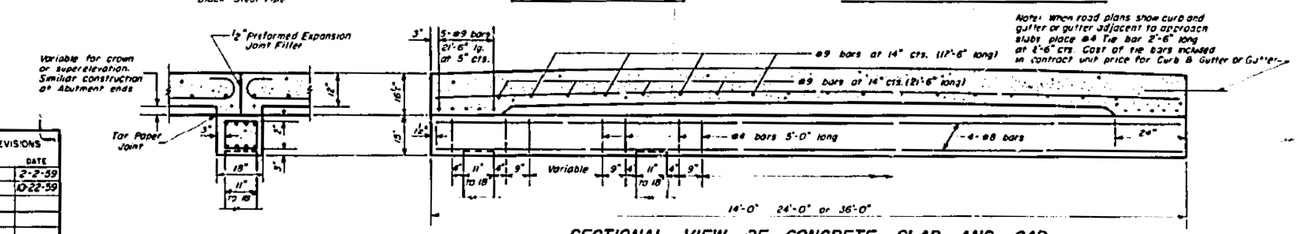

Note: When road plans show curb and gutter or gutter adjacent to approach slab place #4 Tie bar 2'-6" long at 2'-6" cts. Cost of the bars included in contract unit price for Curb & Gutter or Gutter.

SECTIONAL VIEW OF CONCRETE SLAB AND CAP

GENERAL NOTES

The slab or slabs will be paid for at the contract unit price for PORTLAND CEMENT CONCRETE PAVEMENT (16½"-12"-16½").

The concrete cap will be paid for at the contract unit price for CLASS X CONCRETE.

All Reinforcement Bars, except tie bars for curb and gutter or gutter, will be paid for at the contract unit price for REINFORCEMENT BARS.

The Welded Wire Fabric, Mud Jack Cylinders and Preformed Expansion Joint Filler shall be included in the unit price bid for PORTLAND CEMENT CONCRETE PAVEMENT (16½"-12"-16½").

Preformed Expansion Joint Filler shall conform to Section 429 of the Standard Specifications.

Width of Bridge Approach Slab pours shall be determined before the reinforcement bars are fabricated.

Quantities shown for Reinforcement Bars are for two(2) thickened edges only.

STATE OF ILLINOIS
DEPARTMENT OF PUBLIC WORKS AND BUILDINGS
DIVISION OF HIGHWAYS

PASSED DEC 18 1958
ENGINEER OF BRIDGE AND TRAFFIC STRUCTURES

APPROVED Dec 18 1958
ENGINEER OF DESIGN

REVISIONS	BY	DATE
WAS		2-2-59
CET		10-22-59

STANDARD 2138-1

USER NAME = Greg.Eaglin	DESIGNED -	REVISED -	STATE OF ILLINOIS DEPARTMENT OF TRANSPORTATION
	DRAWN -	REVISED -	
PLOT SCALE = 40.0000 ' / in.	CHECKED -	REVISED -	
PLOT DATE = 1/25/2023	DATE -	REVISED -	

DETAIL OF BRIDGE APPROACH PAVEMENTS AT S.N. 057–0047 & S.N. 057–0048

SCALE: | SHEET 1 OF 1 SHEETS | STA. | TO STA.

F.A.I. RTE.	SECTION	COUNTY	TOTAL SHEETS	SHEET NO.
74A	**	MCLEAN	93	90

CONTRACT NO. 70G08

ILLINOIS | FED. AID PROJECT

** (57-7)RS-3,(57-20)RS-4

MODEL: $MODEL NAMES
FILE NAME: pw:\\ildot-pw.bentley.com:PWIDOT\Documents\IDOT Offices\District 5\Projects\D570G08\CAD\Data\CAD-Sheets\D570G08-sht-Details.dgn

GUARDRAIL DETAIL FOR MORRIS AVENUE

S.N. 057–0116

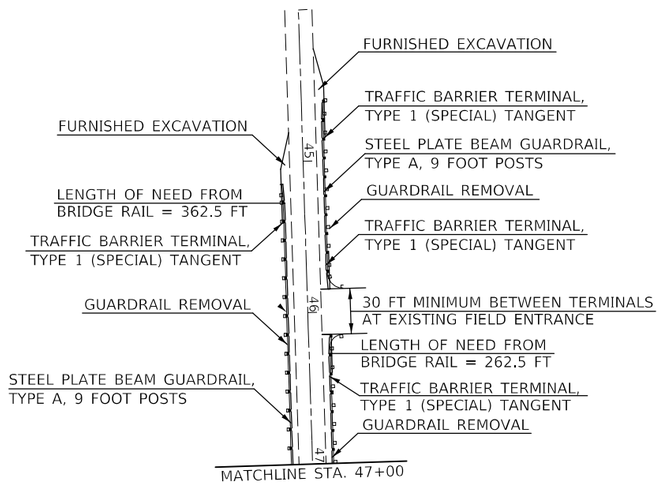

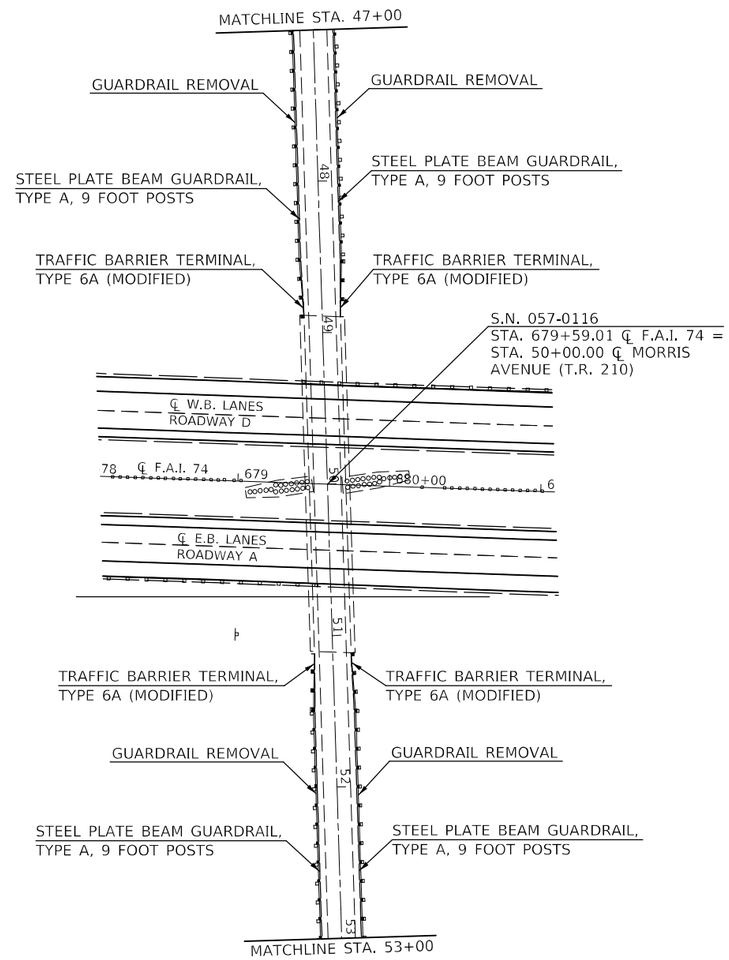

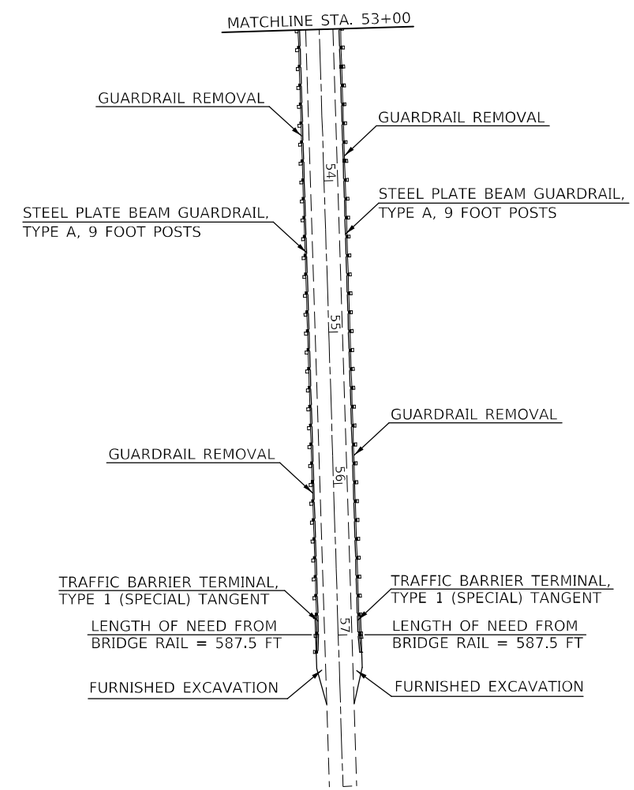

MODEL: $MODELNAME$
FILE NAME: pw:\\ildot-pw.bentley.com:PWIDOT\Documents\IDOT Offices\District 5\Projects\D570G08\CADData\CASheets\D570G08-sht-Guardrail.dgn

USER NAME = Greg.Eaglin	DESIGNED -	REVISED -	
	DRAWN -	REVISED -	
PLOT SCALE = 100.0000 ' / in.	CHECKED -	REVISED -	
PLOT DATE = 1/25/2023	DATE -	REVISED -	

STATE OF ILLINOIS
DEPARTMENT OF TRANSPORTATION

GUARDRAIL DETAIL FOR MORRIS AVENUE
S.N. 057–0116

SCALE: | SHEET 1 OF 1 SHEETS | STA. | TO STA.

F.A.I. RTE.	SECTION	COUNTY	TOTAL SHEETS	SHEET NO.
74A	**	MCLEAN	93	91
		CONTRACT NO. 70G08		
		ILLINOIS FED. AID PROJECT		

** (57-7)RS-3,(57-20)RS-4

OPTION 1

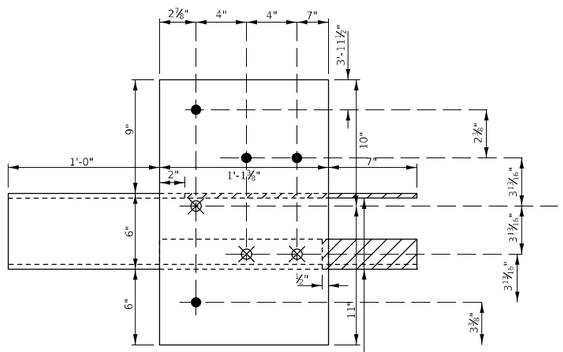

Hatched portions of ⅜" Plate and L 4" x 4" x ⅜" shall be removed or omitted. If removed after galvanizing, the exposed bare metal shall be coated with an approved zinc rich paint.

GUARDRAIL CONNECTION PLATE ASSEMBLY

(Modified from Std. 631032)

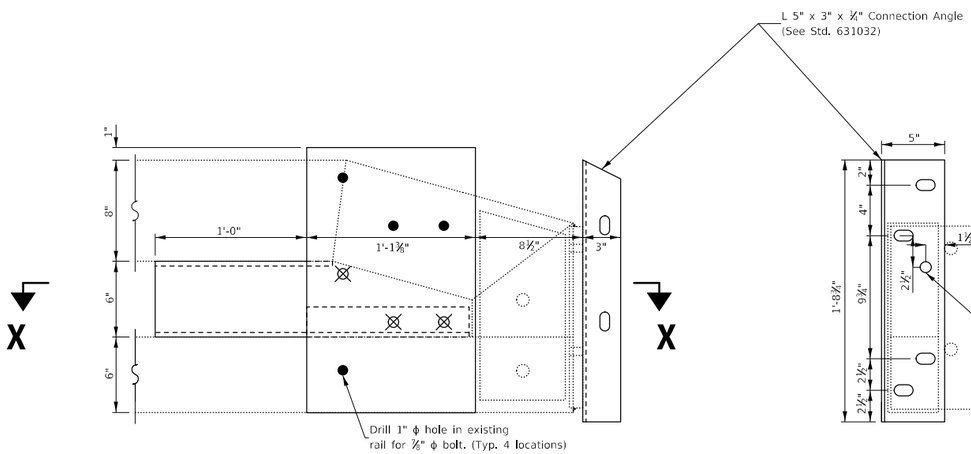

END OF RAIL DETAILS

(Typical at 2 corners of bridge)

END VIEW

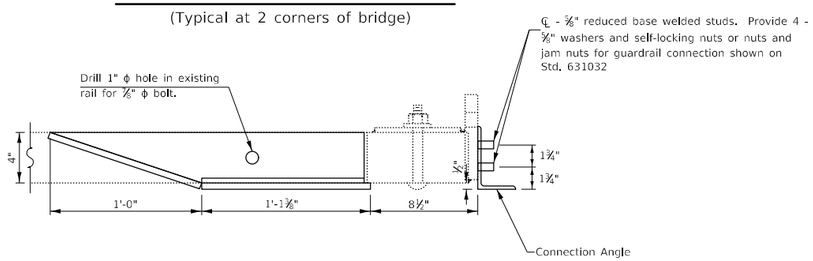

SECTION X–X

OPTION 2

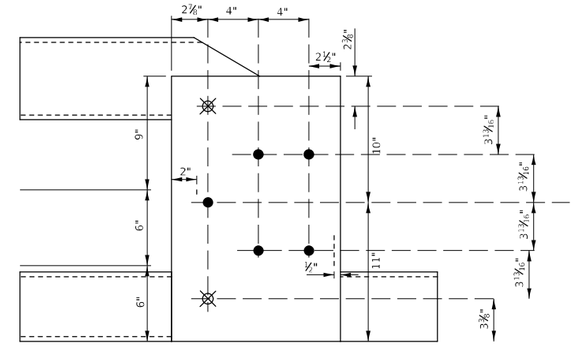

GUARDRAIL CONNECTION PLATE ASSEMBLY

(Modified from Std. 631032)

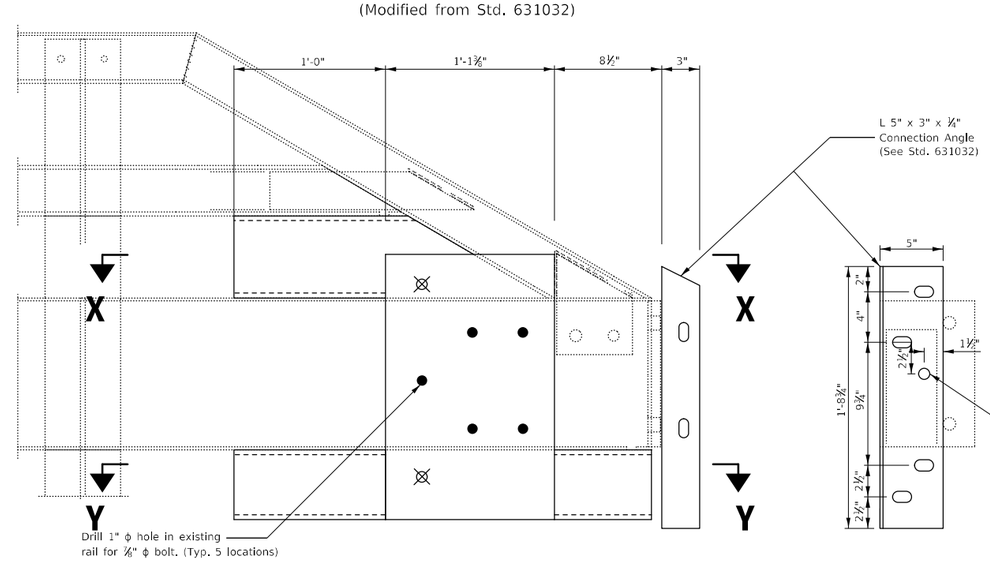

END OF RAIL DETAILS

(Typical at 2 corners of bridge)

END VIEW

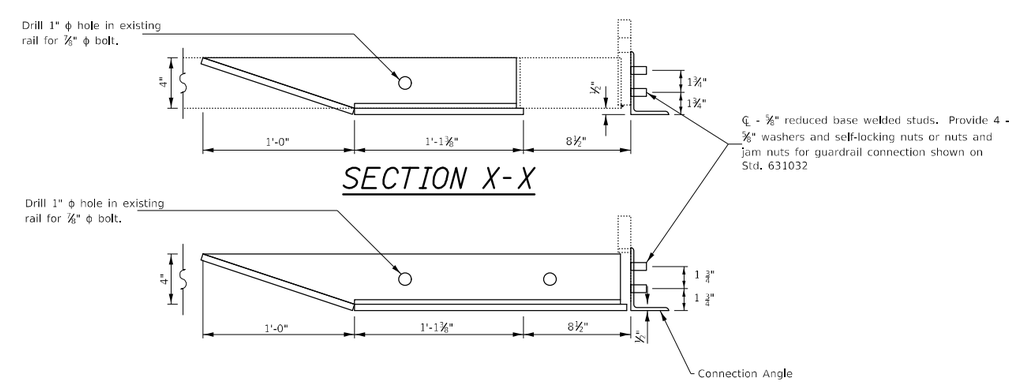

SECTION X-X

SECTION Y–Y

MODEL: $MODELNAMES
FILE NAME: pw:\\ildot-pw.bentley.com:PWIDOT\Documents\IDOT Offices\District 5\Project\D570G08\CADData\CADSheets\D570G08-sht-Guardrail Mount Detail.dgn

USER NAME = Steven.Wood	DESIGNED -	REVISED -	
	DRAWN -	REVISED -	
PLOT SCALE = 40.0000 ' / in.	CHECKED -	REVISED -	
PLOT DATE = 2/15/2023	DATE -	REVISED -	

STATE OF ILLINOIS
DEPARTMENT OF TRANSPORTATION

TRAFFIC BARRIER TERMINAL TYPE 6A
(MODIFIED) MOUNTING DETAIL

SCALE: | SHEET 1 OF 1 SHEETS | STA. TO STA.

F.A.I. RTE.	SECTION	COUNTY	TOTAL SHEETS	SHEET NO.
74A	**	MCLEAN	93	92
		CONTRACT NO. 70G08		
		ILLINOIS FED. AID PROJECT		

** (57-7)RS-3,(57-20)RS-4

CENTERLINE INTERSTATE OR MULTI-LANE TWO WAY DIVIDED HIGHWAY

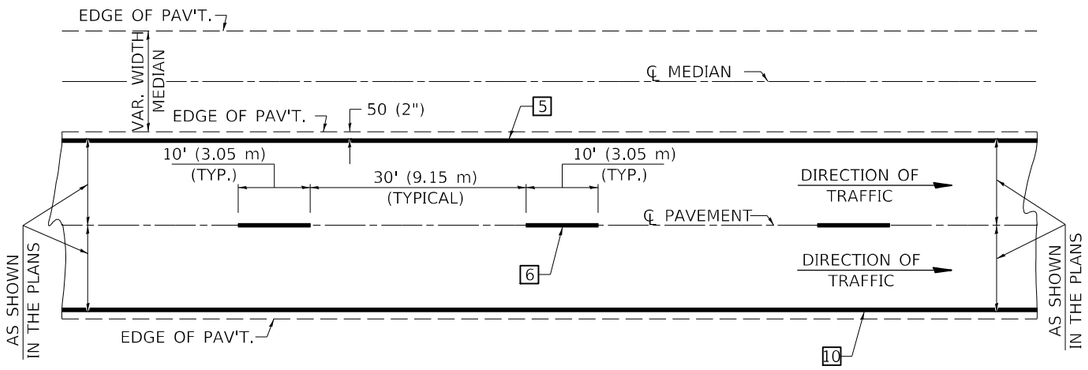

NOTE: PAVEMENT MARKINGS ARE TO BE EXTENDED THROUGH OMISSIONS WHEN APPLICABLE.

NOTE: SEE ARTICLES 780.04 & 781.03 FOR LOCATION OF STRIPES AND MARKERS RELATIVE TO EDGES OR JOINTS.

FOR RAISED REFLECTIVE PAVEMENT MARKERS, REFER TO STANDARD 781001.

TYPICAL EXIT RAMP TERMINAL

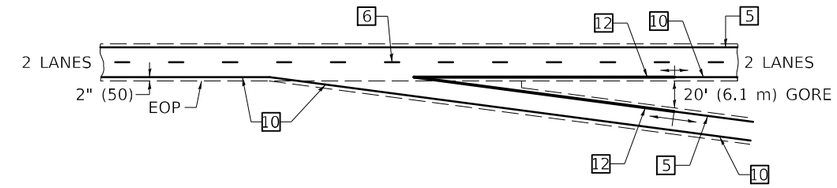

EXIT RAMP TERMINAL with EXCLUSIVE (auxiliary) LANE

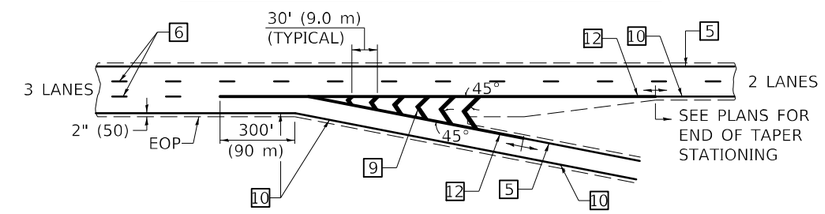

TYPICAL ENTRANCE RAMP TERMINAL

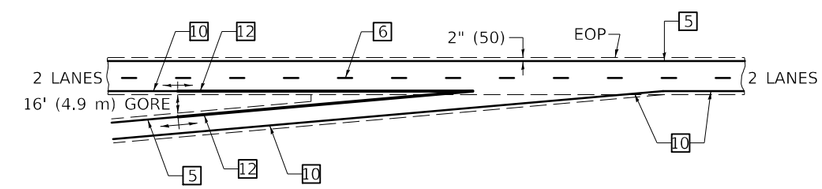

ENTRANCE RAMP TERMINAL with EXCLUSIVE LANE

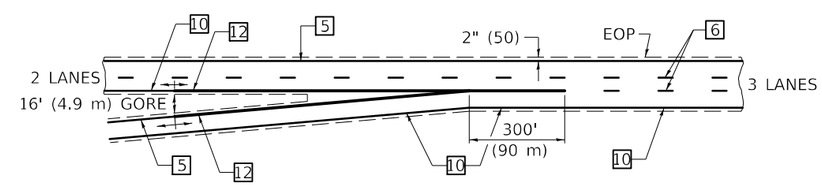

TYPICAL PAVEMENT MARKING LEGEND

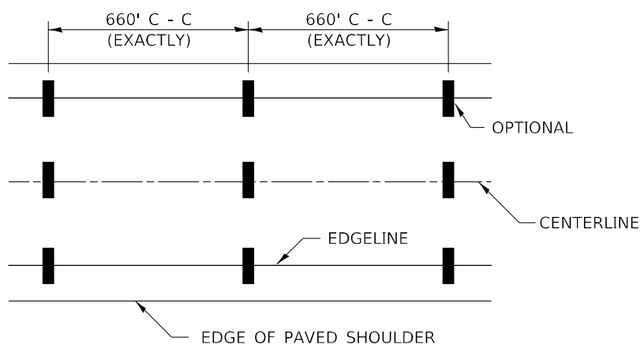

IT WILL BE NECESSARY TO HAVE A REPRESENTATIVE OF THE STATE POLICE PRESENT SO THAT THE ACCURACY OF MEASUREMENT CAN BE ATTESTED TO IN COURT.

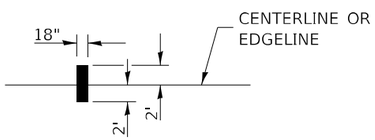

AERIAL SPEED CHECK ZONES

1. 4" (100) SKIP-DASH (YELLOW)
2. 4" (100) SOLID (YELLOW)
3. 12" (300) DIAGONAL (YELLOW)
4. 4" (100) DOUBLE YELLOW (NARROW)
5. 6" (150) SOLID (YELLOW)
6. 6" (150) SKIP-DASH (WHITE)
7. 4" (100) SKIP-DASH (WHITE)
8. 4" (100) SOLID (WHITE)
9. 12" (300) DIAGONAL (WHITE)
10. 6" (150) SOLID (WHITE)
11. 24" (600) STOP BAR (WHITE)
12. 8" (200) SOLID (WHITE)
13. 6" (150) LANE LINE EXTENSIONS (WHITE)

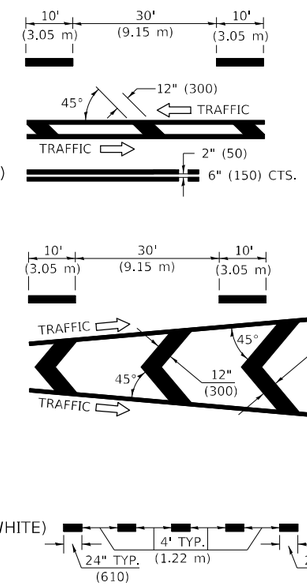

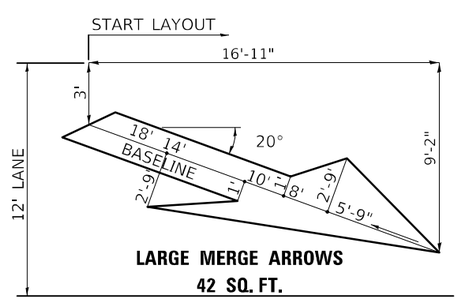

LARGE MERGE ARROWS
42 SQ. FT.

Note: All dimensions are in INCHES (millimeters) unless otherwise shown.

USER NAME = Greg.Eaglin	DESIGNED -	REVISED - 11/06	STATE OF ILLINOIS DEPARTMENT OF TRANSPORTATION	PAVEMENT MARKING (INTERSTATE & MULTI-LANE APPLICATIONS)			DISTRICT 5 DETAIL NO. 7800BBBB		
	DRAWN -	REVISED - 12/20					F.A.I. RTE.	SECTION	COUNTY / TOTAL SHEETS / SHEET NO.
PLOT SCALE = 40.0000 ' / in.	CHECKED -	REVISED -					74A	**	MCLEAN / 93 / 93
PLOT DATE = 1/25/2023	DATE -	REVISED -		SCALE:	SHEET 1 OF 1 SHEETS	STA. TO STA.			CONTRACT NO. 70G08
								ILLINOIS	FED. AID PROJECT

** (57-7)RS-3,(57-20)RS-4

MODEL: $MODEL NAMES
FILE NAME: pw:\\ildot-pw.bentley.com:PWIDOT\Documents\IDOT Offices\District 5\Projects\D570G08\CADData\CADsheets\D570G08-int-Detail.dgn